NOTES:
1. APPROX. WT. 13.3 POUNDS
2. MATERIAL: CAST ALLOY ASTM 297 HD
   C<=0-0.5, Mn=0-1.0, Si=0-2.0, P=0-0.04,
   S=0-0.04, Mo0-0.5, Cr=26-30, Ni=4-7, Bal=Fe
3. ALL HOLES ARE TO BE DRILLED
   TO 1/4" DIAMETER
4. REMOVE ALL BURS FROM DRILLING
5. MAINTAIN DRILLING ANGLE SPECIFIED
6. 40 PARTS REQUIRED

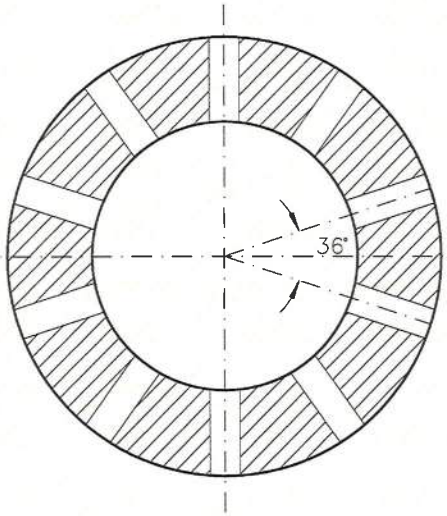

SECTION A-A
TEN 1/4" DRILLED HOLES
EVENLY SPACED

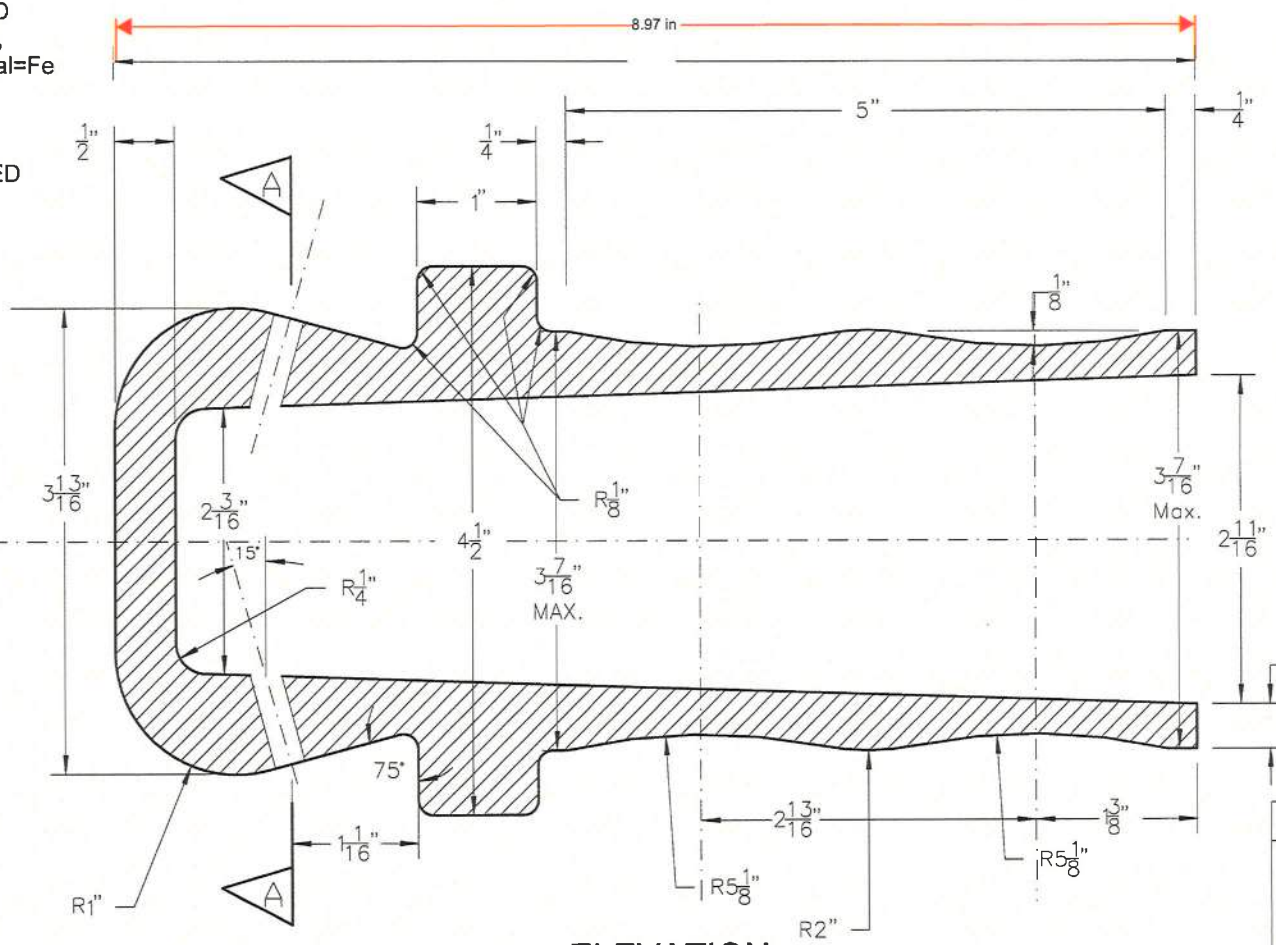

ELEVATION
CROSS SECTION

DRAWN LTB	DATE 8/23/12	CHECKED STA	DATE 8/23/12
APPROVED LTB	DATE 8/23/12	REV. P	
SCALE 1" = 1"	DWG. NO. 1790-F-001		

CBE CHAVOND-BARRY ENGINEERING CORP.
NJ Corp Office: 4 Hilltop Rd. Mendham, NJ 07945 • 973-543-7900
466 Route 518 • P.O. Box 905 • Blairstown, NJ 07825 • 908-362-6266

CITY OF LYNNWOOD, WA
WWTP 76TH AVE. WEST
FBI REPLACEMENT TUYERES

NO.	DWN.	CK'D	APP.	REVISIONS	DATE

THIS PRINT AND ALL INFORMATION THERE ON IS THE PROPERTY OF THE CHAVOND-BARRY ENGINEERING CORPORATION AND IS SUBJECT TO RETURN UPON DEMAND. IT IS NOT TO BE MADE PUBLIC OR COPIED UNLESS AUTHORIZED BY THE ABOVE COMPANY. ALL RIGHTS TO PATENTABLE DESIGN OR INVENTION ARE RESERVED.