Geotechnical Report
Sewer Lift Station #4 Relocation Project
Lynnwood, Washington

November 9, 2011

Draft

Submitted To:
Mr. Barry Knight
CTS Engineers of Washington, PLLC
1412 112th Avenue NE, Suite 102
Bellevue, Washington 98004

By:
Shannon & Wilson, Inc.
400 N 34th Street, Suite 100
Seattle, Washington 98103

21-1-21535-001
DRAFT

TABLE OF CONTENTS

Page

1.0 INTRODUCTION 1

2.0 SITE AND PROJECT DESCRIPTION 1

3.0 FIELD EXPLORATIONS 2

4.0 GEOTECHNICAL LABORATORY TESTING 2

5.0 GEOLOGIC SETTING AND SUBSURFACE CONDITIONS 3
- 5.1 General Geology 3
- 5.2 Tectonic Conditions 4
- 5.3 Geologic Hazard Areas 4
- 5.4 Subsurface Soil Conditions 4
- 5.5 Groundwater 5
- 5.6 Soil Properties 5

6.0 ENGINEERING STUDIES AND RECOMMENDATIONS 5
- 6.1 Seismic Engineering 6
- 6.2 Trenching and Excavation 6
- 6.3 Temporary Shoring 7
- 6.4 Temporary and Permanent Lateral Earth Pressures 8
- 6.5 Backfill and Compaction 8
- 6.6 Foundation Preparation and Support 8
- 6.7 Settlement 9
- 6.8 Groundwater Control 9
- 6.9 Uplift 10
- 6.10 Infiltration 10

7.0 CONSTRUCTION CONSIDERATIONS 10
- 7.1 Wet Weather Work 10
- 7.2 Geotechnical Monitoring 11
  - 7.2.1 Settlement Monitoring 11
  - 7.2.2 Observation Wells 12

8.0 LIMITATIONS 12

9.0 REFERENCES 14

TABLE

1 Soil Engineering Properties 6

Draft

TABLE OF CONTENTS (cont.)

FIGURES

1 Vicinity Map
2 Legacy Lynnwood Development Site Plan
3 New Sewer Lift Station #4 Site and Exploration Plan
4 Design Acceleration Response Spectra
5 Temporary Lateral Earth and Water Pressures
6 Recommended Surcharge Loading for Walls

APPENDICES

A Boring Logs and Geotechnical Laboratory Test Results
B Test Pit Logs, Liu & Associates, Inc.
C Important Information About Your Geotechnical/Environmental Report

Draft

GEOTECHNICAL REPORT
SEWER LIFT STATION #4 RELOCATION PROJECT
LYNNWOOD, WASHINGTON

1.0 INTRODUCTION

This report presents the results of our geotechnical engineering studies completed for a new underground lift station near the proposed Homewood Suites site in Lynnwood, Washington, as shown in Figure 1.

The information and recommendations presented in this report are intended to provide the City of Lynnwood and the CTS Engineers of Washington, PLLC (CTS Engineers) design team with the information required to assist with advancing the lift station design. Included in this report are a site and project description; a description of the field explorations, geotechnical laboratory testing, and geologic setting and subsurface conditions; and results of engineering studies and associated construction recommendations. The geotechnical data, which provide the basis for the engineering recommendations presented in this report, are included in Appendices A and B.

The services detailed in the report were conducted in general accordance with Task 3 as described in Exhibit A-1of our subcontract with CTS Engineers, which was authorized on June 29, 2011.

2.0 SITE AND PROJECT DESCRIPTION

The project site is located primarily in a retail area northeast of Alderwood Mall in Lynwood, Washington. The proposed relocation of Lift Station #4 is in response to the adjacent Homewood Suites development of the Legacy Lynnwood project. The development is situated on a triangle-shaped tract of land bounded by 26th Avenue West, Interstate 405, and Beech Road in Lynwood, as shown in Figure 2. The proposed lift station is located on City of Lynnwood property immediately north of the Legacy Lynnwood development. At the time of drilling, ALFA Legacy Construction occupied the site and was performing considerable earthwork and regrading. The majority of the site was cleared of existing structures and vegetation in preparation for construction. The approximate ground surface elevation at the site during drilling was about 348 feet.

The proposed Lift Station #4 consists of a underground wet and dry wells and an at-grade lift station building, as shown in Figure 3. Excavation for the underground structures to about elevation 330 feet will require temporary shoring. A concrete top slab will be placed over the underground structures at elevation 355.5 feet. Final footing elevation of the sanitary sewage lift station building is 355.0 feet.

3.0 FIELD EXPLORATIONS

One geotechnical boring, designated as LLS-1, was drilled and sampled at 2.5-foot intervals to a depth of 25.8 feet on October 10, 2011, to characterize the subsurface conditions present at the lift station site. Holocene Drilling performed the drilling under subcontract to Shannon & Wilson, Inc., using hollow-stem auger drilling techniques. The approximate boring location is shown in Figure 3. A representative of Shannon & Wilson, Inc. observed the drilling and sampling of the boring. The log of the boring is presented in Figure A-2 in Appendix A. A soil classification and log key is presented in Figure A-1.

Soil samples were obtained in conjunction with Standard Penetration Tests (SPTs). In the SPT, a 2-inch-outside-diameter, 1.375-inch-inside-diamter, split-barrel sampler is driven with a 140-pound hammer falling through a height of 30 inches. The number of blows required to achieve each of three 6-inch increments of sampler penetration is recorded during the test. The number of blows for the last 12 inches of penetration is termed the Standard Penetration Resistance (N-value). When penetration resistances exceed 50 blows for 6 inches or less of penetration, the test is terminated and the number of blows is recorded along with the penetration. The N-values for the tests performed in boring LLS-1 are presented graphically in the boring log, Figure A-2.

CTS Engineering provided a previous geotechnical report prepared for Legacy Lynwood development (Liu & Associates, Inc., 2008). Three of the nine test pit excavations were located adjacent to the lift station site. These three test pits are designated No. 6, No. 8, and No. 9 and are included in Appendix B. The approximate locations of the tests pits are shown in Figure 3.

4.0 GEOTECHNICAL LABORATORY TESTING

Soil samples retrieved from the split-barrel sampler were logged, visually classified, sealed in jars, and returned to our laboratory in Seattle for further classification and testing. Laboratory testing included visual classification and tests to determine the natural water content and grain-size distribution. Classification of the samples was based on ASTM International (ASTM) Designation: D 2487, Standard Test Method for Classification of Soil for Engineering Purposes,

and ASTM Designation: D 2488, Standard Recommended Practice for Description of Soils (Visual-Manual Procedure).

Water content determinations were based on ASTM Designation: D 2216, Test Method for Determination of Water (Moisture) Content of Soil and Rock. The water contents are shown graphically in the boring log (Figure A-2).

The grain-size distribution analyses were based on ASTM Designation: D 422, Standard Test Method for Particle-Size Analysis of Soils. Results of these tests are presented in Figure A-3.

5.0 GEOLOGIC SETTING AND SUBSURFACE CONDITIONS

The geology and subsurface conditions were inferred from soil samples and groundwater information obtained from boring LLS-1, from data gathered from existing projects in the vicinity, from geologic maps of the area, and from our experience on other projects in the vicinity. The following sections include a description of the general geology, tectonic conditions, geologic hazards areas, subsurface soil and groundwater conditions, and soil properties encountered or anticipated at the site.

5.1 General Geology

The topography in the study area is the result of the last glaciation of the central Puget Sound Lowland between approximately 15,000 and 13,500 years ago, the geologic processes since that time, and human development. The subsurface geologic conditions may involve soils deposited during one or more of the six or more glacial advances and intervening interglacial periods that have occurred within the Puget Sound area within the last 2 million years. During the last glaciation (Vashon Stade of the Fraser Glaciation) in the Puget Sound area, glaciolacustrine clay and silt, outwash sand, and lodgment till were deposited by the glacier and were consolidated to a hard or very dense nature by the weight of about 3,000 feet of ice. As the last ice to reach the Puget Lowland (Vashon Stade) retreated to the north, deposits of sand, gravel, silt, and clay were laid down by meltwater streams issuing from the glacial ice front. These deposits are termed glacial recessional soils and are not glacially consolidated. Since the last glacier retreated, alluvium and organic soils, including peat, were deposited. Where development has occurred, these soils have been covered with fill, structures, and roadways, or potentially removed.

Draft

5.2 Tectonic Conditions

Tectonically, the Puget Lowland is located in the fore-arc of the Cascadia Subduction Zone. The tectonics and seismicity of the region are the result of the relative northeastward subduction of the Juan de Fuca Plate beneath the North American Plate.

The nearest potentially active fault to the project is the South Whidbey Island Fault. The Southern Whidbey Island Fault Zone (SWIFZ) has been described as a 4- to 7-mile-wide, northwest-trending, northeast-dipping zone with inferred reverse, thrust, and strike-slip (dextral) displacement on different splays within the zone, and with a length of at least 50 miles (Johnson and others, 1996; Blakely and others, 2004). Based on studies of coastal marshes on Whidbey Island, Kelsey and others (2004) postulate that a magnitude 6½ to 7 earthquake occurred in this fault zone approximately 2,800 to 3,200 years ago. This and other recently completed fault trenching studies on land near Woodinville suggest that the SWIFZ produced at least four events in the last approximately 16,400 years (Sherrod and others, 2005).

The project falls within this postulated zone of deformation of the SWIFZ and a projected splay of the South Whidbey Island Fault is present within 1 to 2 miles of the site. There is no direct evidence of dislocation or offsets in the logs from project specific borehole or test pits to confirm or deny the existence of this or other splays of the fault in the area.

5.3 Geologic Hazard Areas

Based on our understanding of Section 17.10.090 of the City of Lynnwood Critical Areas Ordinance, no geologic hazardous areas are present that would require a setback or mitigation. The geologic hazards considered include: naturally occurring slopes of 40 percent or more, landslide hazard areas, seismic hazard areas, mine hazard areas, and erosion hazard areas.

5.4 Subsurface Soil Conditions

Subsurface conditions for the proposed lift station were interpreted from the samples obtained from boring LLS-1. Because of uncertainties regarding the amount of grading performed and original elevation of the test pits, we did not consider them in our interpretation of the subsurface conditions.

Beneath approximately 5 feet of fill (Hf), the site is underlain by about 7 feet of recessional outwash (Qvro) consisting of medium dense to dense, silty, gravelly sand. The Qvro is underlain by glacial till or drift (Qvd) consisting of a till-like sediment that is very dense, non-sorted to poorly sorted slightly silty to silty sand with a variable amount of gravel (diamict).

The test pit logs indicate a shallow layer of peat approximately 2 to 3 feet in thickness immediately below surficial fill that was not observed in the boring. It is our understanding from CTS Engineers that the peat was excavated and removed from the site as part of the ongoing work by ALFA Legacy Construction.

5.5 Groundwater

Based on the observations during drilling, groundwater is present at about 5 feet below ground surface (bgs) (elevation 344 feet). The groundwater is likely perched above the contact between the recessional outwash and glacial drift (about elevation 337 feet). The magnitude of seasonal groundwater fluctuation is not known.

Liu & Associates indicated a trickle to moderate groundwater flow (1 to 3 gallons per minute) during test pit excavation. The depth of groundwater seepage noted in the test pit logs generally coincides with the original location of the 2- to 3-foot-thick peat layer at 2 to 4 feet bgs. Given the earthwork performed since the test pits were excavated, it is difficult to correlate the groundwater conditions in the test pit logs to those observed in boring LLS-1. Assuming the site is approximately 2 feet lower now, the groundwater during test pit excavation may have been at or about 2 feet lower than the present ground surface elevation. In addition, because the peat was excavated and removed, the depth and flow rate of groundwater encountered at the site may be different than indicated on the test pit logs.

5.6 Soil Properties

For design purposes, soil engineering properties are presented in Table 1 for the geologic units encountered during the geotechnical investigations. The values in this table are based on relationships with laboratory and field test results and our experience with these soil units on similar projects.

6.0 ENGINEERING STUDIES AND RECOMMENDATIONS

Based on the results of boring LLS-1 and geotechnical laboratory testing, geotechnical engineering studies were performed to develop geotechnical recommendations for the lift station. This report presents recommendations for seismic engineering, trenching, excavation, temporary shoring, temporary and permanent lateral pressures, backfilling and compaction, foundation preparation and support, settlement, groundwater control, and infiltration.

DRAFT

TABLE 1
SOIL ENGINEERING PROPERTIES

Geologic Unit	Total Unit Weight (pcf)	Drained Shear Strength		Hydraulic Conductivity K (cm/sec)
		C' (tsf)	ϕ' (degrees)	
Fill (Hf)	130	0	34	10^{-1} to 10^{-5}
Recessional Outwash (Qvro)	130	0	34	10^{-2} to 10^{-5}
Glacial Drift (Qvd)	135	0	42	10^{-4} to 10^{-7}

Notes:
cm/sec = centimeters per second
pcf = pounds per cubic foot
tsf = tons per square foot

6.1 Seismic Engineering

The City of Lynnwood has adopted the International Building Code (IBC) 2009. The IBC requires seismic design for a Maximum Credible Earthquake (MCE) of 2,500 year return period, equating to 2 percent probability of exceedance in 50 years. Shannon & Wilson developed seismic parameters and design response spectra for the MCE as represented in Figure 4. The spectral accelerations found in the figure represent a Class B firm-ground/soft rock condition, characterized by shear wave velocity of 2,500 feet per second (fps) (760 meters per second). To account for site-specific effects, the project site was classified in accordance with IBC 2009 as site Class C, very dense soil and soil-rock featuring shear wave velocity of 1,400 fps. The design spectral acceleration values found in the figure represent the overall site response incorporating site-specific effects and should be used for all engineering design.

We also evaluated the on-site soils for susceptibility to liquefaction under a seismic event. Based on the data from boring LLS-1 and assuming a design earthquake of magnitude 7 and peak ground acceleration of 0.48g, the in situ soils at the proposed lift station site are not potentially liquefiable.

6.2 Trenching and Excavation

We anticipated that the soils within the depth of the excavations or trenches can be excavated using conventional excavating equipment such as rubber-tired backhoes, tracked hydraulic excavators, or other suitable equipment. An impact-breaker may be required to assist with excavation of the glacial drift. CTS Engineers has indicated that a maximum excavation depth of about 18 feet will be required for the wet and dry wells.

Shallow excavations or trenches are typically conducted using open cut techniques with temporary side slopes and no shoring. This method of excavation is appropriate where the bottom of the excavation is above the groundwater level, sufficient right-of-way exists to construct 2 Horizontal to 1 Vertical sloping excavation walls, and no utilities or other structures are within the excavation limits. For the proposed site, the water table is located at relatively shallow depth and additional construction activities may limit the use of temporary side slopes. Consequently, for excavations below the groundwater, some form of relatively impermeable shoring or dewatering will likely be required to support the excavations.

6.3 Temporary Shoring

Temporary shoring for the underground structures could consist of interlocking steel sheet piles if the perimeter is predrilled. The spacing of the predrilled holes will likely require repeated trials to determine the optimal spacing. Because of the potential for cobbles and boulders, a rock bit may be required for predrilling in the glacial drift. Driving, and not vibrating, of the steel sheet piles would likely be required. Vibrating sheet piles is not recommended because of the possible adverse vibration impacts on adjacent utilities, pavements, and structures and the potential vibration-induced consolidation of the looser soils near the excavation. Driving may still result in undesirable impacts and settlement within a distance approximately equal to the shoring depth, but the potential is significantly lower compared to vibrating.

If dewatered, the excavation or trench shoring may consist of stacked, engineered trench boxes with steel sheet end bulkheads or similar pre-fabricated systems such as Slide-Rail shoring systems that can be installed as the excavation is advanced. Alternatively, the shoring might consist of braced soldier piles with steel sheet lagging.

Regardless of the method selected, the shoring system should be designed, installed, and properly maintained to provide adequate protection against damage to existing utilities, pavements, and facilities as well as protecting construction workers. Typically, the design of the temporary shoring systems and the means and methods of construction are the responsibility of the Contractor, based on requirements provided in the contract documents. In addition, it is normally the Contractor's responsibility to monitor the stability of the shored excavations and take corrective measures if any deficiencies or potentially dangerous conditions are observed or encountered. The Contractor is also responsible for maintenance of the shoring and for all damages related to instability and/or failure of the shoring and ground movements.

6.4 Temporary and Permanent Lateral Earth Pressures

Figure 5 presents temporary lateral earth and water pressures for braced shoring systems. Figure 6 provides recommended lateral surcharge loading pressures for temporary and permanent shoring. Permanent buried structures should be designed to withstand lateral earth and water pressures based on an equivalent fluid density of 90 pounds per cubic foot for the static case. A uniform lateral pressure of 12H pounds per square foot, where H is the height of the structure in feet, should be added for the seismic case.

6.5 Backfill and Compaction

The native, on-site soils generally consist of silty sand and silty gravel. These soils are moisture sensitive and susceptible to disturbance by construction equipment during wet weather. In our opinion, imported structural fill should be used as backfill material instead of native soils to expedite construction.

Backfill material should be compacted to a dense and unyielding condition and to at least 95 percent of the maximum dry density, as determined by ASTM Designation: D 1557-09, Standard Test Methods for Laboratory Compaction Characteristics of Soil Using Modified Effort. All backfill material should be structural fill similar to Gravel Borrow as specified in Section 9-03.14(1) of the Washington State Department of Transportation (WSDOT) Standard Specifications (WSDOT, 2010).

6.6 Foundation Preparation and Support

Final footing elevation for the proposed at-grade building is 355.0 feet and final slab elevation at the lift station exterior is elevation 355.5 feet. The final elevations are about 6 feet higher than the existing surface elevation at boring LLS-1, indicating the slab and footings will likely be founded on engineered fill. For design purposes, we recommend an allowable bearing pressure of 3 kips per square foot (ksf) for footings bearing on the engineered fill. Bottom elevation of the wet and dry well excavation is approximately 330.0 feet in very dense, glacial soils. For design purposes, we recommend an allowable bearing pressure of 10 ksf for footings bearing on the glacial soils.

DRAFT

The foundation soils at the base of the excavation are susceptible to disturbance and loosening during excavation. Consequently, we recommend that the last foot of excavation be accomplished with an excavating bucket that has a flat plate over the teeth. Prior to final placement of the wet and dry wells, foundations, or slabs, the foundation soils should be compacted.

If groundwater is encountered at the excavation base or site water is not properly directed away from the excavation, and the subgrade soils are disturbed or compaction efforts cause the subgrade soils to pump, we recommend that the foundation soils be overexcavated 1 foot and replaced with a gravel working mat placed immediately after overexcavation. The working mat should consist of 12 inches of imported granular fill meeting the gradational requirements specified in Section 9-03.9(2), Shoulder Ballast, of the WSDOT Standard Specifications. The working mat should be compacted prior to the placement of the slab.

6.7 Settlement

In general, the wet and dry wells and backfill will weigh less than the soils excavated. Consequently, the settlement of the wet and dry wells will be equal to or less than the elastic rebound of the foundation soils, estimated at about ¼ inch or less. Differential settlements across the underground structures should be about half the total settlement or about ⅛ inch. Settlements will occur as the underground structures are installed and long-term settlements are not anticipated.

Settlement of the at-grade structures and improvements will depend on the quality and workmanship of the Contractor. In our opinion, with good construction practices, the settlement of these structures should be about ½ inch or less with differential settlements across the structures of about half the total settlement or about ¼ inch.

6.8 Groundwater Control

If relatively permeable shoring is used, groundwater control will be required to allow the excavation to proceed and to maintain a stable excavation base. In general, although groundwater observed during drilling was relatively shallow, about 5 feet bgs, the high fines content and low permeability of the soils encountered are expected to limit groundwater inflow. A combination of deep and shallow sumps and pumps would likely be sufficient for controlling groundwater. If pockets of cleaner sand are encountered, additional groundwater control, such as closely spaced well points, may be required to lower and maintain the groundwater level below the base of the excavation. Groundwater-drawdown-induced settlement at the site is not

anticipated, since the saturated in situ soils are medium dense to very dense. However, if dewatering of the excavation results in lowering the groundwater level in the peat still present outside the site limits, excessive settlement could occur. Therefore, the Contractor should be responsible for designing a system of shoring and groundwater control that prevents the lowering of groundwater in the peat at adjacent property lines to less than 6 inches.

In addition, we recommend that the belowgrade structures be waterproofed so that they do not act as long-term drains or sumps that could influence the regional groundwater levels.

6.9 Uplift

The buried structures will be subjected to hydrostatic uplift pressures. To account for potential seasonal fluctuations and the groundwater conditions observed in the test pits, we recommend that a design groundwater elevation of 348 feet be used for estimating the uplift pressure.

6.10 Infiltration

In our opinion, the soils observed in boring LLS-1 are not favorable for long-term stormwater infiltration. Based on the completed grain size analyses, the recessional outwash and glacial drift soils contain upwards of 30 percent silt by weight, which in our opinion indicates they are not well suited for stormwater infiltration.

7.0 CONSTRUCTION CONSIDERATIONS

7.1 Wet Weather Work

In the project area, wet weather work generally begins about mid-October and continues through May. It would be advisable to schedule the earthwork during the drier weather months; however, the following recommendations would apply if wet weather earthwork were unavoidable.

- The ground surface in the construction area should be sloped to promote rapid runoff of precipitation away from open excavation and to prevent ponding of water.
- Fill material to be placed should consist of clean, granular soil of which no more than 5 percent by dry weight passes the No. 200 sieve, based on wet-sieving the fraction passing the ¾-inch sieve. The fines should be non-plastic.
- Soils that become too wet for compaction should be removed and replaced with clean, imported structural fill.

- Excavation and placement of structural fill should be observed on a full-time basis by a geotechnical engineer or engineer's representative, experienced in earthwork, to determine that all work is being accomplished in accordance with the intent of the specifications.

The above recommendations for wet weather earthwork should be incorporated into the contract specifications.

7.2 Geotechnical Monitoring

Geotechnical instrumentation should be installed to monitor the response of the ground, groundwater, and adjacent utilities to the wet and dry well excavation. Data collected would be used to assess:

- The validity of any claims.
- The need for and effectiveness of remedial measures.
- Performance of the shoring.
- Performance of the dewatering.

The construction of the project will require a shored excavation for the wet and dry wells, and shallow trench excavations for the appurtenant piping. Each of these construction activities could result in excessive deformations or ground losses that may lead to vertical settlements adjacent to excavations, which may affect adjacent utilities and pavements. These elements should be monitored prior to construction and during construction, as required.

7.2.1 Settlement Monitoring

The settlement monitoring should include surface settlement points, consisting of PK nails installed in pavement and utility settlement points installed on settlement-sensitive utilities. The design team should identify if any settlement-sensitive utilities are present and whether the adjacent pavement needs to be protected. The settlement points should be monitored once prior to construction and then weekly until the lift station installation is complete. As an alternative to utility settlement points, the condition of gravity utilities can be documented before and after construction using video recording equipment. The Contractor should be responsible for abandoning the points and restoration after construction.

Draft

7.2.2 Observation Wells

Observation wells should be installed at the nearest adjacent property line to monitor groundwater drawdown in the event that the peat observed in the test pits extends under adjacent properties. The observation wells should be monitored daily for at least one week prior to the start of dewatering activities and then twice daily during active dewatering. The Contractor should be responsible for abandoning the wells and restoration after construction.

8.0 LIMITATIONS

The purpose of this report is to assist in the design of the City of Lynnwood Sewer Lift Station #4 Relocation project, and the analyses, conclusions, and recommendations presented are not suitable or intended for construction. Furthermore, the analyses, conclusions, and recommendations presented in this report are based on site conditions as they presently exist and further assume that the exploratory boring and groundwater levels are representative of the subsurface conditions at the lift station location. Within the limitations of the scope, schedule, and budget, the analyses, conclusions, and recommendations presented in this report were prepared in accordance with generally accepted professional geotechnical engineering principles and practice in this area at the time this report was prepared. We make no other warranty, either express or implied. Our conclusions and recommendations are based on our understanding of the project as described in this report and the site conditions as interpreted from the explorations. This report does not include any environmental assessment or evaluation regarding the presence or absence of wetlands or hazardous or toxic materials in the soil, surface water, groundwater, or air on or below or around the site.

This report was prepared for the exclusive use of the City of Lynnwood and the CTS Engineers design team. It should be made available to prospective contractors and/or the Contractor for information on factual data only, and not as a warranty of subsurface conditions, such as those interpreted from the boring log and discussions of subsurface conditions included in this report. Shannon & Wilson, Inc., has prepared Appendix C, "Important Information About Your Geotechnical/Environmental Report," to assist you and others in understanding the use and limitations of our reports.

Unanticipated soil conditions are commonly encountered and cannot fully be determined by merely taking soil samples from borings. Such unexpected conditions frequently require that additional expenditures be made to attain properly constructed projects. Therefore, some contingency fund is recommended to accommodate such potential extra cost.

SHANNON & WILSON, INC.

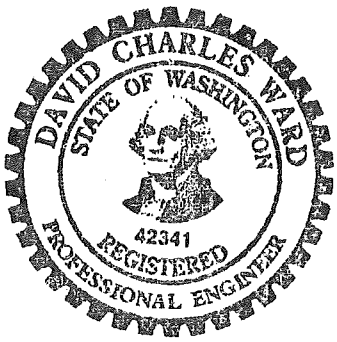

Draft

David C. Ward, P.E.
Associate

DCW: MSK/jzb

9.0 REFERENCES

Blakely, R.J.; Sherrod, B.L.; Wells, R.E.; and others, 2004, The Cottage Lake aeromagnetic lineament -a possible onshore extension of the southern Whidbey Island fault, Washington: U.S. Geological Survey Open-File Report 2004-1204, 60 p.

Johnson, S.Y.; Potter, C.J.; Armentrout, J.M.; and others, 1996, The Southern Whidbey Island Fault, an active structure in the Puget Lowland, Washington: Geological Society of America Bulletin, v. 108, p. 334-354.

Kelsey, H.M.; Sherrod, B.; Johnson, S. Y.; and others, 2004, Land-level changes form a late Holocene earthquake in the northern Puget Lowland, Washington: Geology, v. 32, no. 6, p. 469-472.

Liu & Associates, 2008, Geotechnical Engineering Study, Legacy Lynnwood, 182nd Street SW and 26th Avenue W, Lynnwood, Washington, project no. 8A007, for ALFA Legacy Construction, Albuquerque, NM, December 18.

Sherrod, B.L.; Blakely, R.J.; Weaver, C.; and others, 2005, Holocene fault scarps and shallow magnetic anomalies along the southern Whidbey Island Fault Zone near Woodinville, Washington: Geological Survey Open-File Report 2005-1136, Version 1.0.

Snohomish County, 2007, Landslide, Erosion and Volcanic Hazards map, October 1.

DRAFT

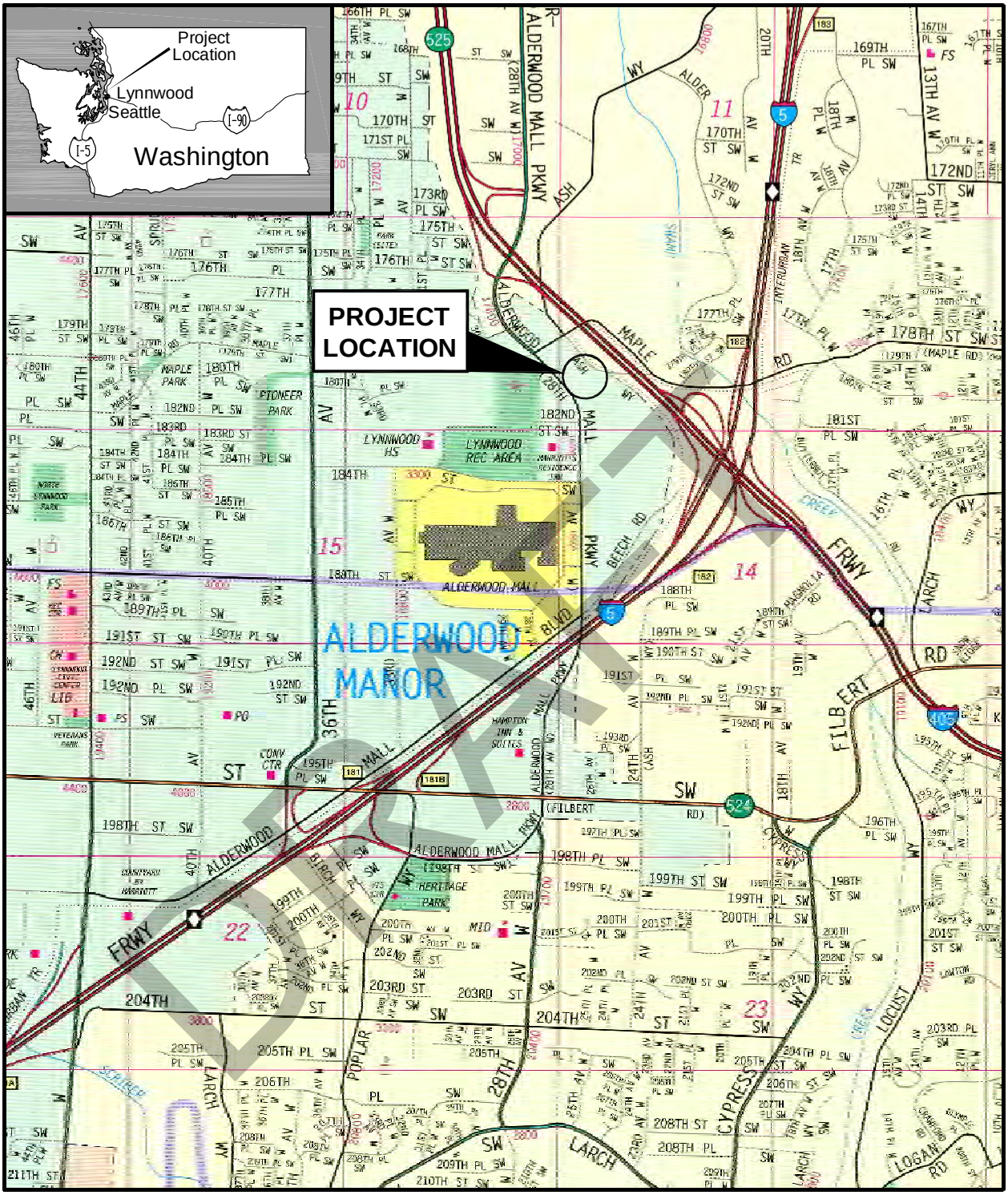

0 1/4 1/2 1

Scale in Miles

NOTE

Reproduced with permission granted by THOMAS BROS. MAPS®. This map is copyrighted by © Rand McNally, R.L. 10-S-006. It is unlawful to copy or reproduce all or any part thereof, whether for personal use or resale, without permission. All rights reserved.

City of Lynnwood Public Works Department
Sewer Lift Station #4 Relocation
Lynnwood, Washington

VICINITY MAP

October 2011 21-1-21535-001

SHANNON & WILSON, INC.
Geotechnical and Environmental Consultants

FIG. 1

Filename: J:\211\21535-001\21-1-21535-001 Fig 1.dwg Date: 10-13-2011 Login: KXW

Filename: J:\211\21535-001\21-1-21535-001 Fig 2.dwg Date: 10-13-2011 Login: KXW

DRAFT

0 100 200

Scale in Feet

NOTE

Figure adapted from Power Point file *Site Plan.ppt.*

City of Lynnwood Public Works Department
Sewer Lift Station #4 Relocation
Lynnwood, Washington

LEGACY LYNNWOOD DEVELOPMENT SITE PLAN

October 2011 21-1-21535-001

SHANNON & WILSON, INC.
Geotechnical and Environmental Consultants

FIG. 2

FIG. 2

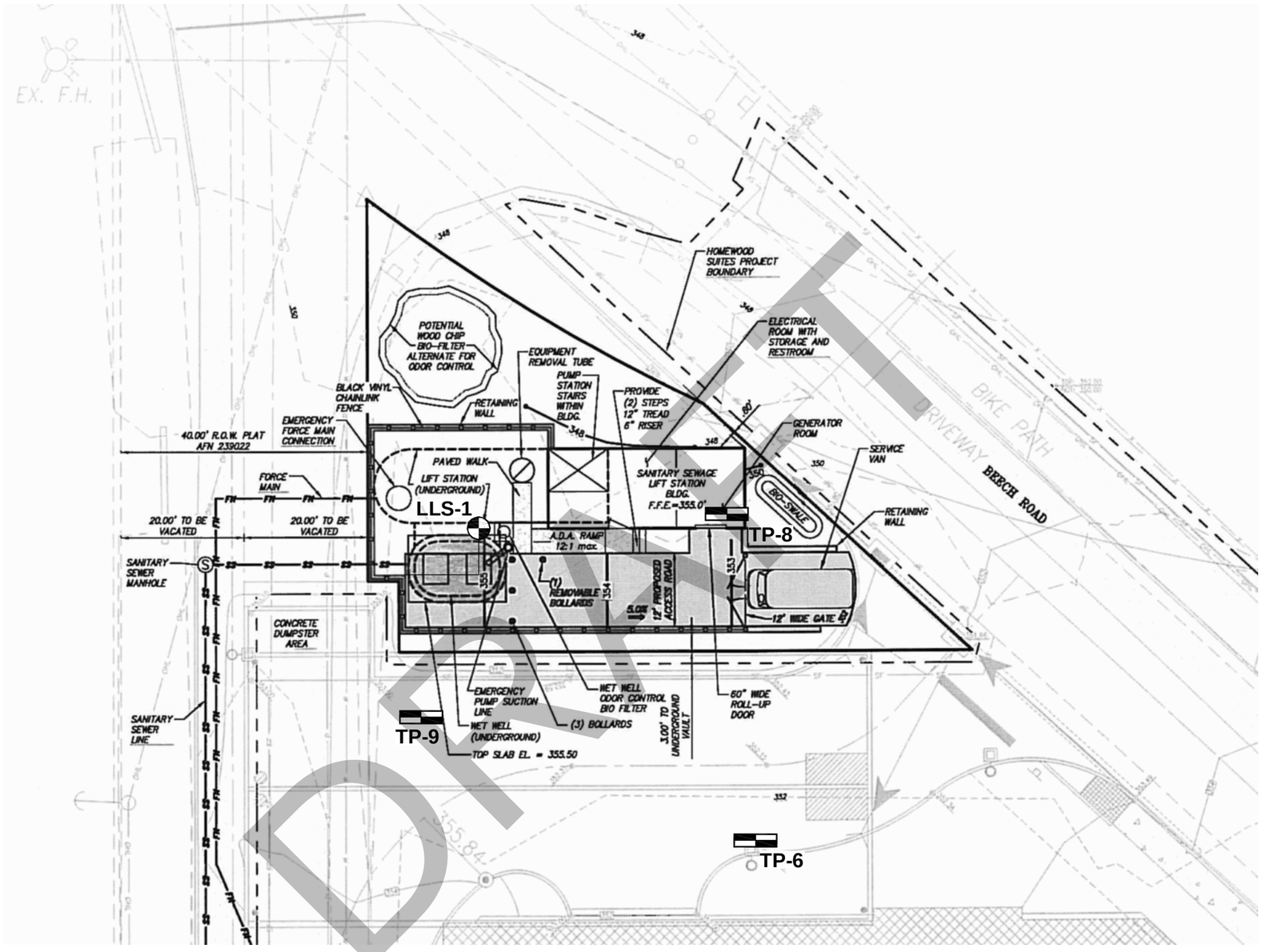

NOTES

1. All boring and test pit locations are approximate.
2. Boring LLS -1 was performed on 10-10-11 by Shannon & Wilson. See Appendix A for boring log.
3. Test pits TP-6, TP-8, and TP-9 performed by Liu and Associates in February 2008. See Appendix B for logs.
4. Figure adapted from City of Lynnwood Public Works Exhibit 2 created by CTS Engineers 9-27-11.

LEGEND

LLS-1 — Boring Designation and Approximate Location

TP-1 — Test Pit Designation and Approximate Location

0 20 40

Scale in Feet

City of Lynnwood Public Works Department
Sewer Lift Station #4 Relocation
Lynnwood, Washington

NEW SEWER LIFT STATION #4 SITE AND EXPLORATION PLAN

October 2011 21-1-21535-001

SHANNON & WILSON, INC.
Geotechnical and Environmental Consultants

FIG. 3

Filename: J:\211\21535-001\21-1-21535-001 Fig 3.dwg Date: 10-18-2011 Login: lr

Design Ground Motion Parameters

Design EQ	Return Period (years)	Spectral Accelerations (g)			Site Response Coefficients			Spectral Response Acceleration (g)			Spectral Design Acceleration (g)		
		PGA	S_S	S_1	F_{PGA}	F_a	F_v	A_S (PGA)	S_{MS}	S_{M1}	A_S (PGA)	S_{DS}	S_{D1}
MCE	2500	0.48	1.21	0.42	1.00	1.00	1.38	0.48	1.21	0.58	0.48	0.80	0.39

Design Acceleration Response Spectra

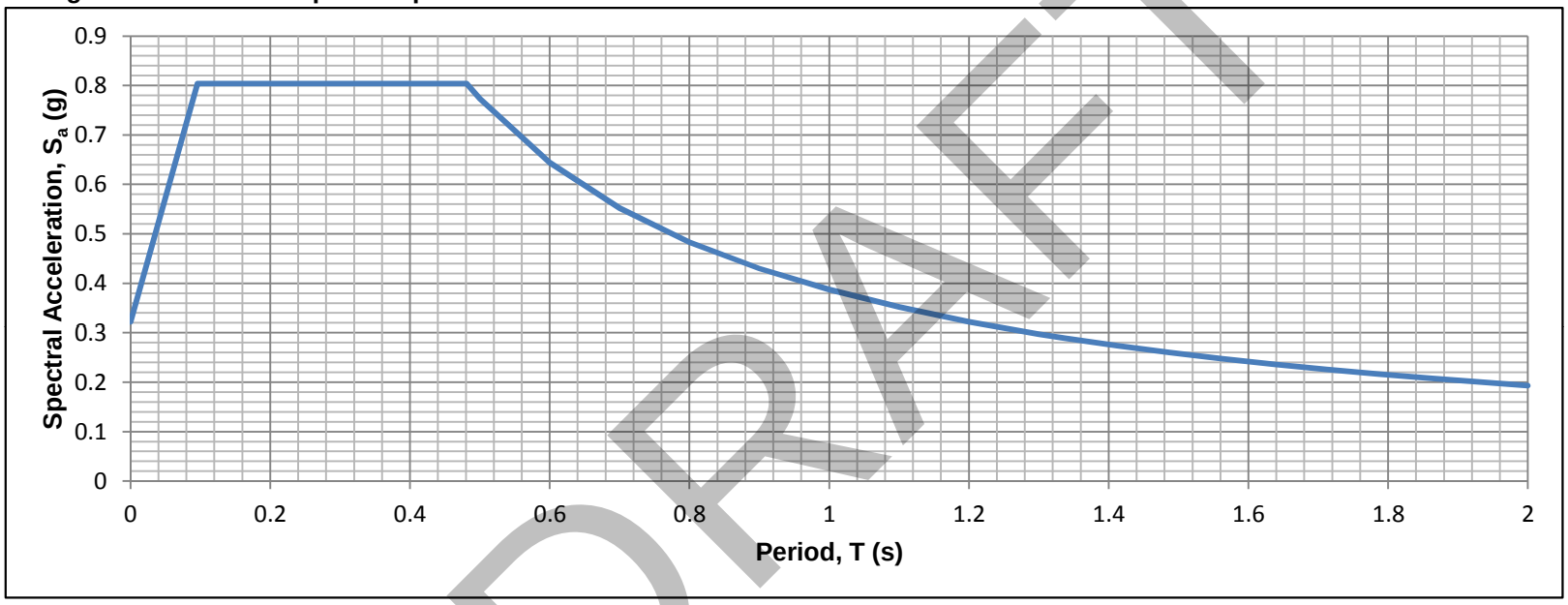

DRAFT

Notes:

1. Seismic design parameters generated based on the International Building Code (2009).
2. Spectral acceleration values characterized by Site Class B, Vs30 = 760 m/s rock.
3. International Building Code considers a Maximum Credible Earthquake of 2500 year return period.

City of Lynnwood Dept. of Water & Sewer
Sewer Lift Station #4 Replacement
Lynnwood, Washington

DESIGN ACCELERATION RESPONSE SPECTRA

October 2011 21-1-21535-001

SHANNON & WILSON, INC.
Geotechnical and Environmental Consultants

FIG. 4

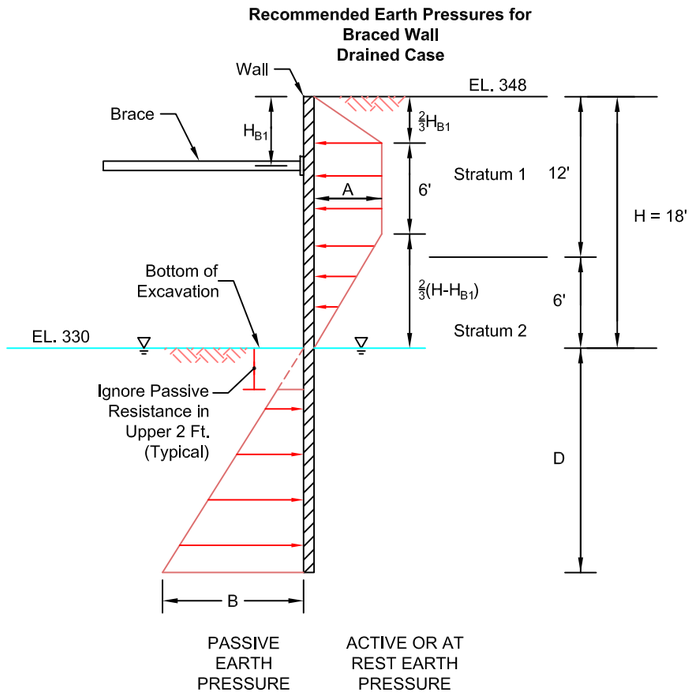

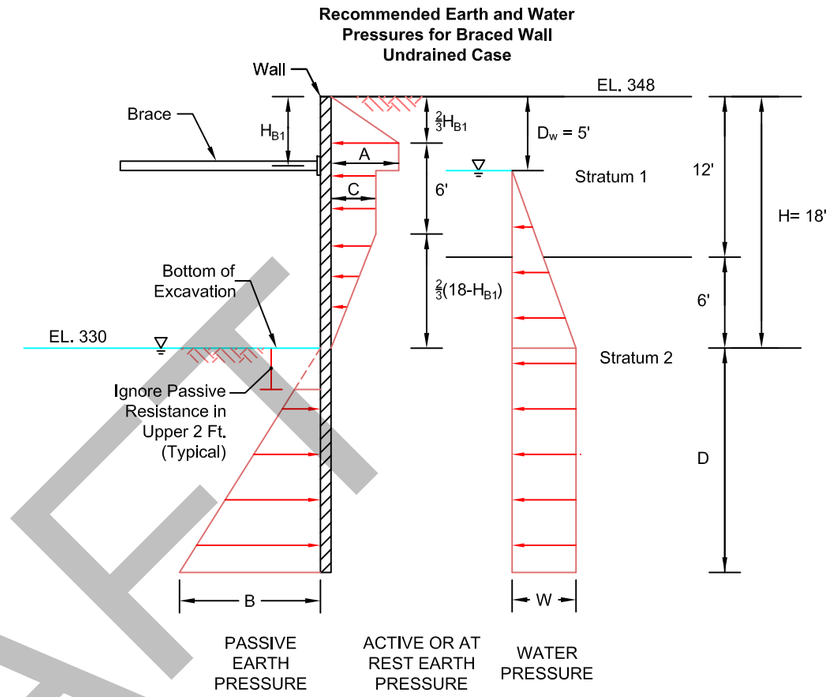

DRAFT

RECOMMENDED EARTH AND WATER PRESSURES

	A	B	C	W
Active	655	--	340	812
At Rest	1030	--	535	812
Passive	--	280 D	--	--

EARTH AND WATER PRESSURE PARAMETERS

	K_a	K_o	K_p	γ	γ'	γ_w	ϕ'
Stratum 1	0.28	0.44	3.54	130	67.5	62.5	34°
Stratum 2	0.20	0.33	5.04	145	82.5	62.5	42°

NOTES

1. The recommended pressure diagrams are based on a continuous wall system. If soldier piles with lagging are used, apply active or at-rest pressure over the width of the soldier piles below the bottom of the excavation and apply passive resistance over three times the diameter of the piles or the spacing of the piles, whichever is smaller.
2. The total lateral earth pressure is the sum of the appropriate active or at-rest earth pressure and surcharge pressure (Figure 6).
3. If allowed wall deflection is greater than 0.001(H), use Active Earth Pressure; otherwise use At-Rest Earth Pressure.
4. All earth pressures are in units of pounds per square foot.
5. For drained case, free drainage is assumed behind the wall and groundwater is assumed to be lowered and maintained at the base of the excavation during construction.
6. Passive pressures include F.S. =1.5.
7. Wall embedment (D) should consider kickout resistance. Embedment should be determined by satisfying horizontal static equilibrium about the bottom of the pile. Minimum recommended embedment is 10 feet.
8. Design lagging for 30% of lateral earth and surcharge pressures. Assumes pile spacing of 4 to 6 feet.
9. Diagrams are not to scale.

LEGEND

H	Total Excavation Height, feet
D	Total Embedment Depth, feet
D_w	Depth to Water, feet
A, B, C...	Earth Pressure Factors; See Table
K_a, K_p, K_o	Active, Passive, and At-Rest Earth Pressure Coefficients, respectively
ϕ'	Effective Friction Angle
γ, γ'	Unit Weight and Bouyant Unit Weight of Soil, respectively, pcf
γ_w	Unit Weight of Water, pcf

City of Lynnwood Dept. of Water & Sewer
Sewer Lift Station #4 Replacement
Lynnwood, Washington

TEMPORARY LATERAL EARTH AND WATER PRESSURES

October 2011 21-1-21535-001

SHANNON & WILSON, INC.
Geotechnical and Environmental Consultants

FIG. 5

Filename: I:\WIP\21-1\21535 - Lynnwood Lift Station\01 Lateral Earth Pressures\21-1-21535-001 Lateral Earth Pressures Rev3.dwg Date: 11-09-2011 Login: ###

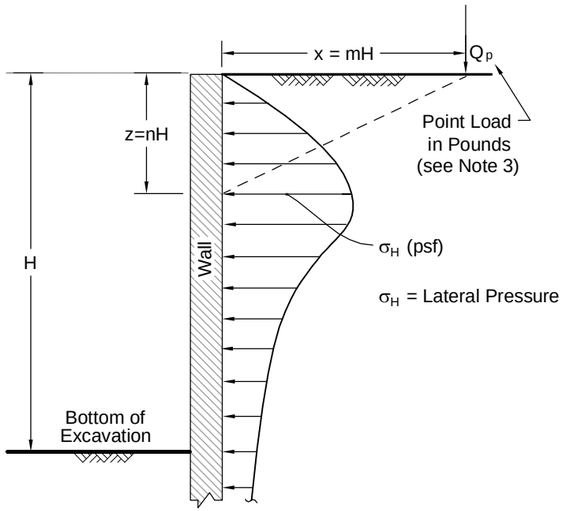

ELEVATION VIEW

For $m \le 0.4$: $\sigma_H = 0.28 \frac{Q_p}{H^2} \frac{n^2}{(0.16 + n^2)^3}$ (psf) (see Note 3)

For $m > 0.4$: $\sigma_H = 1.77 \frac{Q_p}{H^2} \frac{m^2 n^2}{(m^2 + n^2)^3}$ (psf)

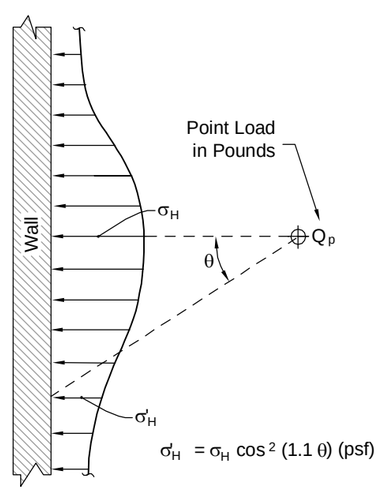

PLAN VIEW

A) LATERAL PRESSURE DUE TO POINT LOAD i.e. SMALL ISOLATED FOOTING OR WHEEL LOAD

(NAVFAC DM 7.2, 1986)

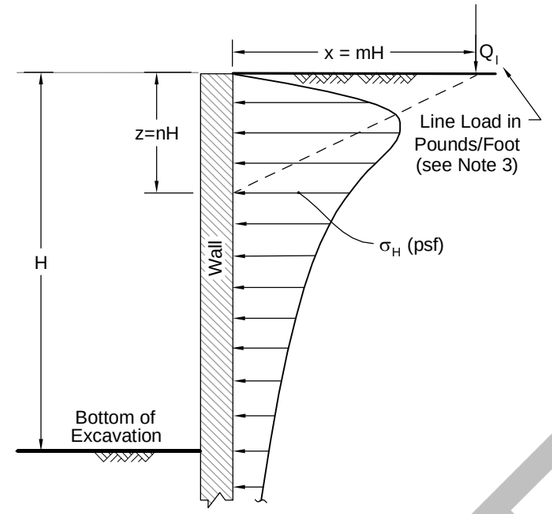

ELEVATION VIEW

For $m \le 0.4$: $\sigma_H = 0.20 \frac{Q_l}{H} \frac{n}{(0.16 + n^2)^2}$ (psf) (see Note 3)

For $m > 0.4$: $\sigma_H = 1.28 \frac{Q_l}{H} \frac{m^2 n}{(m^2 + n^2)^2}$ (psf)

B) LATERAL PRESSURE DUE TO LINE LOAD i.e. NARROW CONTINUOUS FOOTING PARALLEL TO WALL

(NAVFAC DM 7.2, 1986)

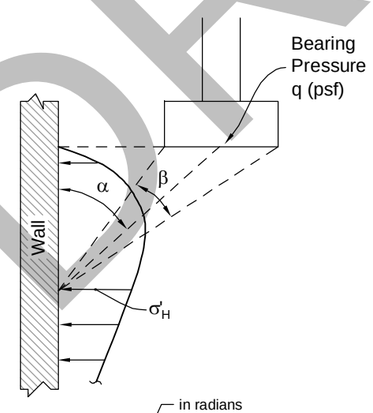

in radians

$\sigma_H = \frac{2q}{\pi} (\beta - \sin\beta \cos 2\alpha)$ (psf)

C) LATERAL PRESSURE DUE TO STRIP LOAD

(derived from Fang, *Foundation Engineering Handbook* , 1991)

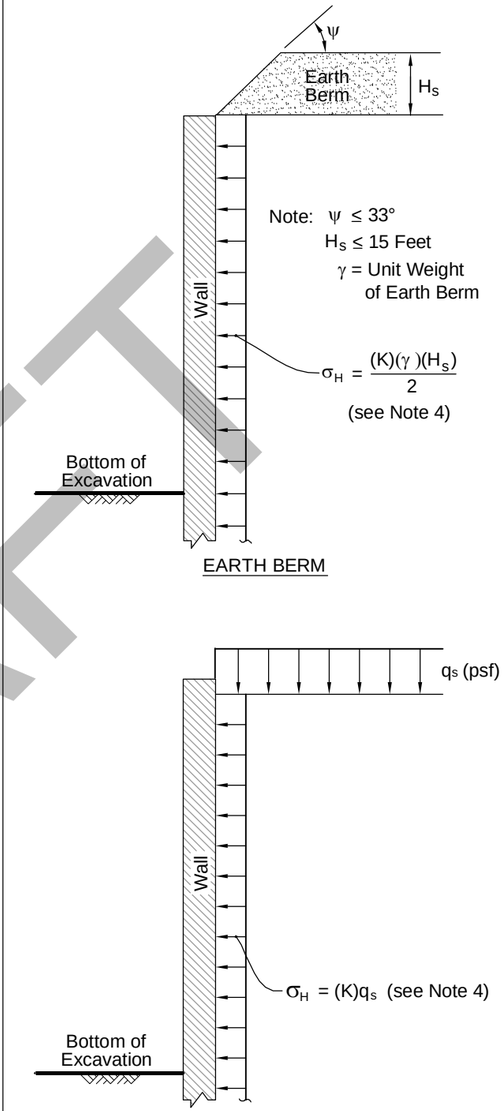

D) LATERAL PRESSURE DUE TO EARTH BERM OR UNIFORM SURCHARGE

(derived from Poulos and Davis, *Elastic Solutions for Soil and Rock Mechanics* , 1974; and Terzaghi and Peck, *Soil Mechanics in Engineering Practice* , 1967)

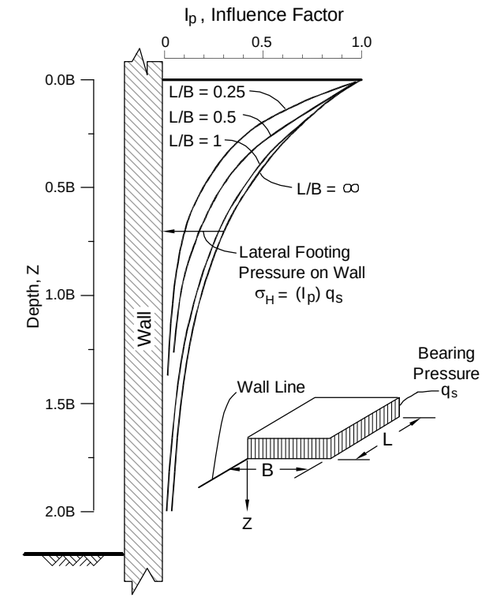

E) LATERAL PRESSURE DUE TO ADJACENT FOOTING

(derived from NAVFAC DM 7.2, 1986; and Sandhu, *Earth Pressure on Walls Due to Surcharge* , 1974)

NOTES

1. Figures are not drawn to scale.
2. Applicable surcharge pressures should be added to appropriate permanent wall lateral earth and water pressure.
3. If point or line loads are close to the back of the wall such that $m \le 0.4$, it may be more appropriate to model the actual load distribution (i.e., Detail E) or use more rigorous analysis methods.
4. K = 0.4 (Active) or 0.5 (At-Rest).

City of Lynnwood Public Works Department
Sewer Lift Station #4 Relocation
Lynnwood, Washington

RECOMMENDED SURCHARGE LOADING FOR WALLS

October 2011 | 21-1-21535-001

SHANNON & WILSON, INC.
Geotechnical and Environmental Consultants

FIG. 6

DRAFT

File: J:\211\21535-001\21-1-21535-001 Fig 6.dwg Date: 11-09-2011 Author: sac

APPENDIX A

BORING LOGS AND GEOTECHNICAL LABORATORY TEST RESULTS

Draft

APPENDIX A

BORING LOGS AND GEOTECHNICAL LABORATORY TEST RESULTS

TABLE OF CONTENTS

FIGURES

A-1 Soil Classification and Log Key (2 sheets)
A-2 Log of Boring LLS-1
A-3 Grain Size Distribution

Draft

Shannon & Wilson, Inc. (S&W), uses a soil classification system modified from the Unified Soil Classification System (USCS). Elements of the USCS and other definitions are provided on this and the following page. Soil descriptions are based on visual-manual procedures (ASTM D 2488-93) unless otherwise noted.

S&W CLASSIFICATION OF SOIL CONSTITUENTS

- MAJOR constituents compose more than 50 percent, by weight, of the soil. Major consituents are capitalized (i.e., SAND).
- Minor constituents compose 12 to 50 percent of the soil and precede the major constituents (i.e., silty SAND). Minor constituents preceded by "slightly" compose 5 to 12 percent of the soil (i.e., slightly silty SAND).
- Trace constituents compose 0 to 5 percent of the soil (i.e., slightly silty SAND, trace of gravel).

MOISTURE CONTENT DEFINITIONS

Dry	Absence of moisture, dusty, dry to the touch
Moist	Damp but no visible water
Wet	Visible free water, from below water table

ABBREVIATIONS

ATD	At Time of Drilling
Elev.	Elevation
ft	feet
FeO	Iron Oxide
MgO	Magnesium Oxide
HSA	Hollow Stem Auger
ID	Inside Diameter
in	inches
lbs	pounds
Mon.	Monument cover
N	Blows for last two 6-inch increments
NA	Not applicable or not available
NP	Non plastic
OD	Outside diameter
OVA	Organic vapor analyzer
PID	Photo-ionization detector
ppm	parts per million
PVC	Polyvinyl Chloride
SS	Split spoon sampler
SPT	Standard penetration test
USC	Unified soil classification
WOH	Weight of hammer
WOR	Weight of drill rods
WLI	Water level indicator

GRAIN SIZE DEFINITION

DESCRIPTION	SIEVE NUMBER AND/OR SIZE
FINES	< #200 (0.08 mm)
SAND*	
- Fine	#200 to #40 (0.08 to 0.4 mm)
- Medium	#40 to #10 (0.4 to 2 mm)
- Coarse	#10 to #4 (2 to 5 mm)
GRAVEL*	
- Fine	#4 to 3/4 inch (5 to 19 mm)
- Coarse	3/4 to 3 inches (19 to 76 mm)
COBBLES	3 to 12 inches (76 to 305 mm)
BOULDERS	> 12 inches (305 mm)

* Unless otherwise noted, sand and gravel, when present, range from fine to coarse in grain size.

RELATIVE DENSITY / CONSISTENCY

COARSE-GRAINED SOILS		FINE-GRAINED SOILS	
N, SPT, BLOWS/FT.	RELATIVE DENSITY	N, SPT, BLOWS/FT.	RELATIVE CONSISTENCY
0 - 4	Very loose	Under 2	Very soft
4 - 10	Loose	2 - 4	Soft
10 - 30	Medium dense	4 - 8	Medium stiff
30 - 50	Dense	8 - 15	Stiff
Over 50	Very dense	15 - 30	Very stiff
		Over 30	Hard

WELL AND OTHER SYMBOLS

	Bent. Cement Grout		Surface Cement Seal
	Bentonite Grout		Asphalt or Cap
	Bentonite Chips		Slough
	Silica Sand		Bedrock
	PVC Screen		
	Vibrating Wire		

City of Lynnwood Dept. of Water & Sewer
Sewer Lift Station #4 Replacement
Lynnwood, Washington

SOIL CLASSIFICATION AND LOG KEY

October 2011 21-1-21535-001

SHANNON & WILSON, INC.
Geotechnical and Environmental Consultants

FIG. A-1
Sheet 1 of 2

UNIFIED SOIL CLASSIFICATION SYSTEM (USCS)
(From USACE Tech Memo 3-357)

MAJOR DIVISIONS			GROUP/GRAPHIC SYMBOL		TYPICAL DESCRIPTION
COARSE-GRAINED SOILS *(more than 50% retained on No. 200 sieve)*	Gravels *(more than 50% of coarse fraction retained on No. 4 sieve)*	Clean Gravels *(less than 5% fines)*	GW		Well-graded gravels, gravels, gravel/sand mixtures, little or no fines.
			GP		Poorly graded gravels, gravel-sand mixtures, little or no fines
		Gravels with Fines *(more than 12% fines)*	GM		Silty gravels, gravel-sand-silt mixtures
			GC		Clayey gravels, gravel-sand-clay mixtures
	Sands *(50% or more of coarse fraction passes the No. 4 sieve)*	Clean Sands *(less than 5% fines)*	SW		Well-graded sands, gravelly sands, little or no fines
			SP		Poorly graded sand, gravelly sands, little or no fines
		Sands with Fines *(more than 12% fines)*	SM		Silty sands, sand-silt mixtures
			SC		Clayey sands, sand-clay mixtures
FINE-GRAINED SOILS *(50% or more passes the No. 200 sieve)*	Silts and Clays *(liquid limit less than 50)*	Inorganic	ML		Inorganic silts of low to medium plasticity, rock flour, sandy silts, gravelly silts, or clayey silts with slight plasticity
			CL		Inorganic clays of low to medium plasticity, gravelly clays, sandy clays, silty clays, lean clays
		Organic	OL		Organic silts and organic silty clays of low plasticity
	Silts and Clays *(liquid limit 50 or more)*	Inorganic	MH		Inorganic silts, micaceous or diatomaceous fine sands or silty soils, elastic silt
			CH		Inorganic clays of medium to high plasticity, sandy fat clay, or gravelly fat clay
		Organic	OH		Organic clays of medium to high plasticity, organic silts
HIGHLY-ORGANIC SOILS	Primarily organic matter, dark in color, and organic odor		PT		Peat, humus, swamp soils with high organic content (see ASTM D 4427)

NOTE: No. 4 size = 5 mm; No. 200 size = 0.075 mm

NOTES

1. Dual symbols *(symbols separated by a hyphen, i.e., SP-SM, slightly silty fine SAND)* are used for soils with between 5% and 12% fines or when the liquid limit and plasticity index values plot in the CL-ML area of the plasticity chart.

2. Borderline symbols *(symbols separated by a slash, i.e., CL/ML, silty CLAY/clayey SILT; GW/SW, sandy GRAVEL/gravelly SAND)* indicate that the soil may fall into one of two possible basic groups.

City of Lynnwood Dept. of Water & Sewer
Sewer Lift Station #4 Replacement
Lynnwood, Washington

SOIL CLASSIFICATION AND LOG KEY

October 2011 | 21-1-21535-001

SHANNON & WILSON, INC.
Geotechnical and Environmental Consultants

FIG. A-1
Sheet 2 of 2

BORING_CLASS2 21-21535.GPJ SWNEW.GDT 10/12/11

Total Depth:	25.8 ft.	Northing:	~ 5,318 ft.	Drilling Method:	Hollow Stem Auger	Hole Diam.:	8 in.
Top Elevation:	~ 348.8 ft.	Easting:	~ 10,149 ft.	Drilling Company:	Holocene Drilling	Rod Diam.:	2-5/8-inch
Vert. Datum:	Unknown	Station:	~	Drill Rig Equipment:	Truck-Mounted	Hammer Type:	Automatic
Horiz. Datum:	Unknown	Offset:	~	Other Comments:			

SOIL DESCRIPTION

Refer to the report text for a proper understanding of the subsurface materials and drilling methods. The stratification lines indicated below represent the approximate boundaries between material types, and the transition may be gradual.

Very dense, brown, slightly silty, sandy GRAVEL; moist; GP-GM.

4.5

Dense, brown to gray, silty, gravelly SAND; wet; SM.

7.0

Medium dense to dense, gray, slightly gravelly to gravelly, silty SAND; wet; SM.

12.0

Very dense, gray, slightly gravelly to gravelly, silty SAND; moist; diamict; SM.

25.8

BOTTOM OF BORING
COMPLETED 10/10/2011

Depth, ft. | Symbol | Samples | Ground Water | Depth, ft.

During Drilling

PENETRATION RESISTANCE (blows/foot)

▲ Hammer Wt. & Drop: 140 lbs / 30 inches

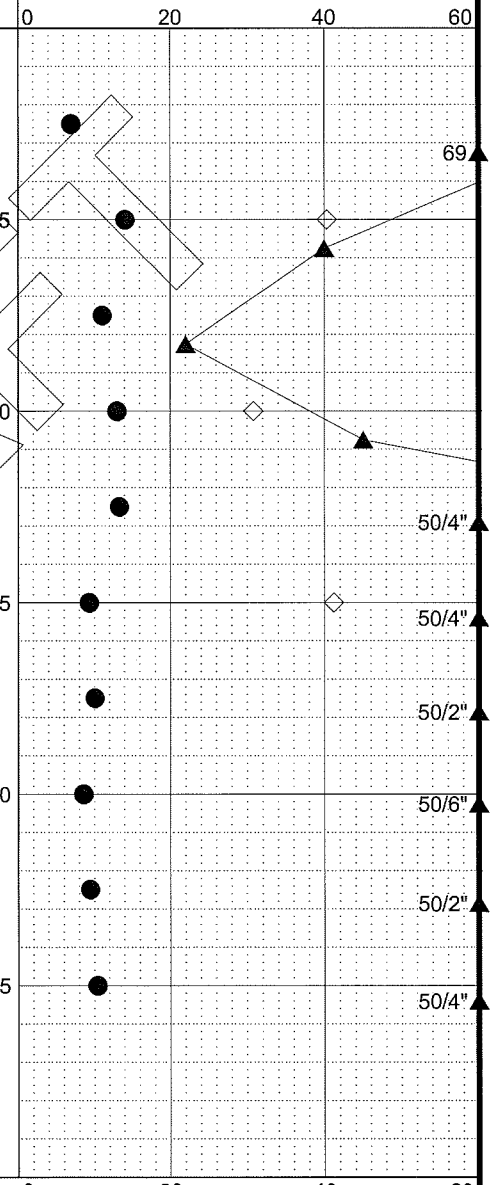

LEGEND

* Sample Not Recovered

Standard Penetration Test

Ground Water Level ATD

◇ % Fines (<0.075mm)

● % Water Content

NOTES

1. Refer to KEY for explanation of symbols, codes, abbreviations and definitions.
2. Groundwater level, if indicated above, is for the date specified and may vary.
3. USCS designation is based on visual-manual classification and selected lab testing.
4. The hole location was measured from existing site features and should be considered approximate.

City of Lynnwood Dept. of Water & Sewer
Sewer Lift Station #4 Replacement
Lynnwood, Washington

LOG OF BORING LLS-1

November 2011 | 21-1-21535-001

SHANNON & WILSON, INC.
Geotechnical and Environmental Consultants

FIG. A-2

REV 1

DRAFT

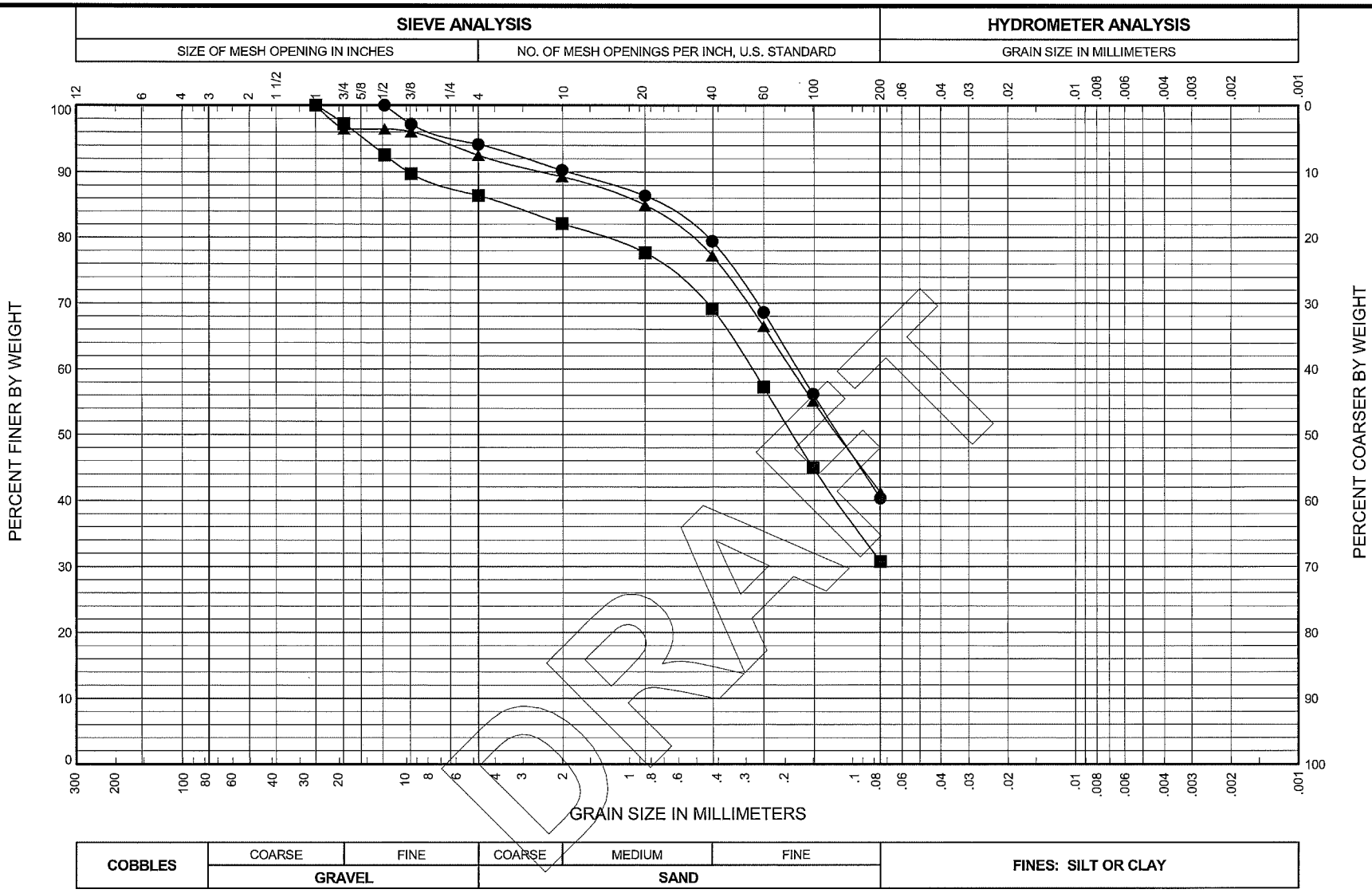

BORING AND SAMPLE NO.	DEPTH (feet)	U.S.C.S. SYMBOL	SAMPLE DESCRIPTION	FINES %	NAT. W.C. %	LL %	PL %	PI %
● LLS-1, S-2	5.0	SM	Gray-brown, slightly fine gravelly, silty SAND; trace of iron oxide	40.3	14.1			
■ LLS-1, S-4	10.0	SM	Gray, gravelly, silty SAND	30.8	13.0			
▲ LLS-1, S-6	15.0	SM	Gray, slightly gravelly, silty SAND	41.2	9.3			

City of Lynnwood Dept. of Water & Sewer
Sewer Lift Station #4 Replacement
Lynnwood, Washington

GRAIN SIZE DISTRIBUTION

November 2011 21-1-21535-001

SHANNON & WILSON, INC.
Geotechnical and Environmental Consultants

FIG. A-3

GSA MAIN 21-21535.GPJ SHAN WIL.GDT 11/9/11

FIG. A-3

Draft

APPENDIX B

TEST PIT LOGS, LIU & ASSOCIATES

APPENDIX B

TEST PIT LOGS, LIU & ASSOCIATES

TABLE OF CONTENTS

PLATES

6 Test Pit No. 5
7 Test Pit No. 7
8 Test Pit No. 9

Draft

TEST PIT NO. 5

Logged By: JSL Date: 2/7/2008 Ground El. ±

Depth ft.		USCS CLASS.	Soil Description	Sample No.	W %	Other Test
1		SM	Lawn grass on surface Brown, loose to medium-dense, silty fine SAND, with fine roots, moist (FILL)			
2		SM	Gray, dense, silty fine SAND, trace gravel, slightly moist (FILL)			
3		OL	Dark-brown, very-loose, silty PEAT, very-moist to wet			
4						
5						
6		SM	Gray, dense, silty fine SAND, trace gravel, weakly-cemented, moist (fresh VASHON TILL)			
7		SM	Gray, medium-dense, silty fine SAND, trace gravel, very-moist to wet			
8						
9						
10		SM/SW	Gray, dense, slightly-silty, fine to coarse sand, trace gravel, very-moist (fresh ADVANCE OUTWASH)			
11						
12						
13			Test pit terminated @ 12.0 ft, minor groundwater seepage (about 1.0 gpm) encountered @ 2.8 to 6.0 ft.			
14						

TEST PIT NO. 6

Logged By: JSL Date: 2/7/2007 Ground El. ±

Depth ft.		USCS CLASS.	Soil Description	Sample No.	W %	Other Test
1		SM	Lawn grass on surface Brown, dense, silty fine SAND, some gravel and occasional cobble, moist to wet (FILL)			
2						
3		SM	Gray, dense, silty fine SAND, some gravel, slightly moist (FILL)			
4						
5		OL	Dark-brown to black, very-loose, silty PEAT, with wood debris and small logs to 3-inch diameter, very-moist to wet			
6		SM/SP	Gray, loose, slightly-silty, fine to medium SAND, moist to very-moist			
7						
8		SM	Brown, dense, silty fine SAND, trace to some gravel, moist			
9						
10		SM	Light-gray, dense to very-dense, silty fine SAND, trace gravel, very-weakly-cemented, moist (fresh VASHON TILL)			
11			Test pit terminated @ 10.5 ft, trickle groundwater seepage (less than 1.0 gpm) encountered @ 4.0 to 7.5 ft.			
12						

LIU & ASSOCIATES, INC.

Geotechnical Engineering · Engineering Geology · Earth Science

TEST PIT LOGS
LEGACY LYNNWOOD
182ND STREET SW AND 26TH AVENUE W
LYNNWOOD, WASHINGTON

JOB NO. 8A007 | DATE 2/7/2008 | PLATE 6

TEST PIT NO. 7

Logged By: JSL Date: 2/7/2008 Ground El. ±

Depth ft.		USCS CLASS.	Soil Description	Sample No.	W %	Other Test
1, 2		SM	Berry bushes on surface Light-gray to light-brown, loose, silty fine SAND, some gravel, moist (FILL)			
3, 4, 5		OL	Dark-brown, very-loose, silty PEAT, very-moist to wet			
6, 7		SM	Light-brown to light-gray mottled, medium-dense, silty fine SAND, some gravel, very moist to wet			
8, 9		SM	Light-gray, very-dense, silty fine SAND, trace gravel, moist (fresh VASHON TILL)			
10, 11			Test pit terminated @ 9.0 ft, moderate groundwater seepage (about 2.0 to 3.0 gpm) encountered @ 2.5 to 5.0 ft.			

TEST PIT NO. 8

Logged By: JSL Date: 2/7/2008 Ground El. ±

Depth ft.		USCS CLASS.	Soil Description	Sample No.	W %	Other Test
1, 2, 3		SM	Grass on surface Gray, medium-dense, silty fine SAND, trace gravel, with roots to 1/4-inch diameter, moist (FILL)			
4, 5, 6		OL	Brown to dark-brown, very-loose, silty PEAT, with decayed logs, very-moist to wet			
7, 8		SM	Brown, medium-dense, silty fine SAND, very-moist to wet			
9, 10, 11		SW	Gray, dense, fine to coarse SAND, very-moist to wet (fresh ADVANCE OUTWASH)			
12			Test pit terminated @ 10.75 ft, minor to moderate groundwater seepage (1.0 to 2.0 gpm) encountered @ 3.5 to 6.0 ft.			

LIU & ASSOCIATES, INC.

Geotechnical Engineering · Engineering Geology · Earth Science

TEST PIT LOGS
LEGACY LYNNWOOD
182ND STREET SW AND 26TH AVENUE W
LYNNWOOD, WASHINGTON

JOB NO. 8A007 DATE 2/7/2008 PLATE 7

TEST PIT NO. 9

Logged By: JSL Date: 2/7/2008 Ground El. ±

Depth ft.		USCS CLASS.	Soil Description	Sample No.	W %	Other Test
1		SM	Berry bushes on surface Dark-brown, loose, organic, silty fine SAND, with roots to 1/4-inch diameter, moist (FILL)			
2		SM	Brown, loose, silty fine SAND, moist (FILL)			
3						
4		OL	Dark-brown, very-loose, silty PEAT, very-moist to wet			
5		SM	Light-brown and light-gray mottled, medium-dense to dense, silty fine SAND, trace gravel, moist			
6						
7						
8		SM	Light-gray, very-dense, silty fine SAND, trace gravel, moist (fresh VASHON TILL)			
9						
10			Test pit terminated @ 9.0 ft, trickle groundwater seepage (less than 1.0 gpm) encountered @ 3.0 to 4.5 ft.			
11						

TEST PIT NO. _____

Logged By: _____ Date: _____ Ground El. ±

Depth ft.		USCS CLASS.	Soil Description	Sample No.	W %	Other Test
1						
2						
3						
4						
5						
6						
7						
8						
9						
10						

LIU & ASSOCIATES, INC.

Geotechnical Engineering · Engineering Geology · Earth Science

TEST PIT LOGS
LEGACY LYNNWOOD
182ND STREET SW AND 26TH AVENUE W
LYNNWOOD, WASHINGTON

JOB NO. 8A007 DATE 2/7/2008 PLATE 8

Draft

APPENDIX C

IMPORTANT INFORMATION ABOUT YOUR GEOTECHNICAL/ENVIRONMENTAL REPORT

IMPORTANT INFORMATION ABOUT YOUR GEOTECHNICAL/ENVIRONMENTAL REPORT

CONSULTING SERVICES ARE PERFORMED FOR SPECIFIC PURPOSES AND FOR SPECIFIC CLIENTS.

Consultants prepare reports to meet the specific needs of specific individuals. A report prepared for a civil engineer may not be adequate for a construction contractor or even another civil engineer. Unless indicated otherwise, your consultant prepared your report expressly for you and expressly for the purposes you indicated. No one other than you should apply this report for its intended purpose without first conferring with the consultant. No party should apply this report for any purpose other than that originally contemplated without first conferring with the consultant.

THE CONSULTANT'S REPORT IS BASED ON PROJECT-SPECIFIC FACTORS.

A geotechnical/environmental report is based on a subsurface exploration plan designed to consider a unique set of project-specific factors. Depending on the project, these may include: the general nature of the structure and property involved; its size and configuration; its historical use and practice; the location of the structure on the site and its orientation; other improvements such as access roads, parking lots, and underground utilities; and the additional risk created by scope-of-service limitations imposed by the client. To help avoid costly problems, ask the consultant to evaluate how any factors that change subsequent to the date of the report may affect the recommendations. Unless your consultant indicates otherwise, your report should not be used: (1) when the nature of the proposed project is changed (for example, if an office building will be erected instead of a parking garage, or if a refrigerated warehouse will be built instead of an unrefrigerated one, or chemicals are discovered on or near the site); (2) when the size, elevation, or configuration of the proposed project is altered; (3) when the location or orientation of the proposed project is modified; (4) when there is a change of ownership; or (5) for application to an adjacent site. Consultants cannot accept responsibility for problems that may occur if they are not consulted after factors which were considered in the development of the report have changed.

SUBSURFACE CONDITIONS CAN CHANGE.

Subsurface conditions may be affected as a result of natural processes or human activity. Because a geotechnical/environmental report is based on conditions that existed at the time of subsurface exploration, construction decisions should not be based on a report whose adequacy may have been affected by time. Ask the consultant to advise if additional tests are desirable before construction starts; for example, groundwater conditions commonly vary seasonally.

Construction operations at or adjacent to the site and natural events such as floods, earthquakes, or groundwater fluctuations may also affect subsurface conditions and, thus, the continuing adequacy of a geotechnical/environmental report. The consultant should be kept apprised of any such events, and should be consulted to determine if additional tests are necessary.

MOST RECOMMENDATIONS ARE PROFESSIONAL JUDGMENTS.

Site exploration and testing identifies actual surface and subsurface conditions only at those points where samples are taken. The data were extrapolated by your consultant, who then applied judgment to render an opinion about overall subsurface conditions. The actual interface between materials may be far more gradual or abrupt than your report indicates. Actual conditions in areas not sampled may differ from those predicted in your report. While nothing can be done to prevent such situations, you and your consultant can work together to help reduce their impacts. Retaining your consultant to observe subsurface construction operations can be particularly beneficial in this respect.

A REPORT'S CONCLUSIONS ARE PRELIMINARY.

The conclusions contained in your consultant's report are preliminary because they must be based on the assumption that conditions revealed through selective exploratory sampling are indicative of actual conditions throughout a site. Actual subsurface conditions can be discerned only during earthwork; therefore, you should retain your consultant to observe actual conditions and to provide conclusions. Only the consultant who prepared the report is fully familiar with the background information needed to determine whether or not the report's recommendations based on those conclusions are valid and whether or not the contractor is abiding by applicable recommendations. The consultant who developed your report cannot assume responsibility or liability for the adequacy of the report's recommendations if another party is retained to observe construction.

THE CONSULTANT'S REPORT IS SUBJECT TO MISINTERPRETATION.

Costly problems can occur when other design professionals develop their plans based on misinterpretation of a geotechnical/environmental report. To help avoid these problems, the consultant should be retained to work with other project design professionals to explain relevant geotechnical, geological, hydrogeological, and environmental findings, and to review the adequacy of their plans and specifications relative to these issues.

BORING LOGS AND/OR MONITORING WELL DATA SHOULD NOT BE SEPARATED FROM THE REPORT.

Final boring logs developed by the consultant are based upon interpretation of field logs (assembled by site personnel), field test results, and laboratory and/or office evaluation of field samples and data. Only final boring logs and data are customarily included in geotechnical/environmental reports. These final logs should not, under any circumstances, be redrawn for inclusion in architectural or other design drawings, because drafters may commit errors or omissions in the transfer process.

To reduce the likelihood of boring log or monitoring well misinterpretation, contractors should be given ready access to the complete geotechnical engineering/environmental report prepared or authorized for their use. If access is provided only to the report prepared for you, you should advise contractors of the report's limitations, assuming that a contractor was not one of the specific persons for whom the report was prepared, and that developing construction cost estimates was not one of the specific purposes for which it was prepared. While a contractor may gain important knowledge from a report prepared for another party, the contractor should discuss the report with your consultant and perform the additional or alternative work believed necessary to obtain the data specifically appropriate for construction cost estimating purposes. Some clients hold the mistaken impression that simply disclaiming responsibility for the accuracy of subsurface information always insulates them from attendant liability. Providing the best available information to contractors helps prevent costly construction problems and the adversarial attitudes that aggravate them to a disproportionate scale.

READ RESPONSIBILITY CLAUSES CLOSELY.

Because geotechnical/environmental engineering is based extensively on judgment and opinion, it is far less exact than other design disciplines. This situation has resulted in wholly unwarranted claims being lodged against consultants. To help prevent this problem, consultants have developed a number of clauses for use in their contracts, reports and other documents. These responsibility clauses are not exculpatory clauses designed to transfer the consultant's liabilities to other parties; rather, they are definitive clauses that identify where the consultant's responsibilities begin and end. Their use helps all parties involved recognize their individual responsibilities and take appropriate action. Some of these definitive clauses are likely to appear in your report, and you are encouraged to read them closely. Your consultant will be pleased to give full and frank answers to your questions.

The preceding paragraphs are based on information provided by the
ASFE/Association of Engineering Firms Practicing in the Geosciences, Silver Spring, Maryland