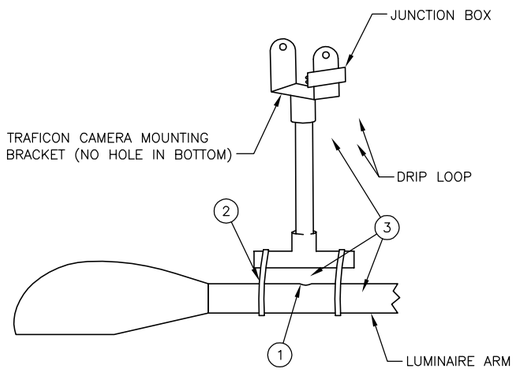

VIDEO DETECTION CAMERA ON LUMINAIRE ARM MOUNTING DETAIL

NOTES:

1. THE CONTRACTOR SHALL DRILL A 1" HOLE IN THE TOP OF THE LUMINAIRE MAST ARM, DEBURR AND PUT A RUBBER GROMMET IN HOLE.
2. THE TRAFICON MOUNT SHALL BE INSTALLED OVER THE 1" HOLE.
3. VIDEO CABLES SHALL BE PULLED THROUGH THE LUMINAIRE MAST ARM THROUGH THE 1" HOLE, THROUGH THE TRAFICON MOUNT AND THROUGH THE INSIDE OF TUBE. EXIT TUBE THROUGH PRE-DRILLED HOLE IN THE SIDE OF TUBE AND CONNECT TO VIDEO JUNCTION BOX LEAVING A DRIP LOOP IN CABLES.

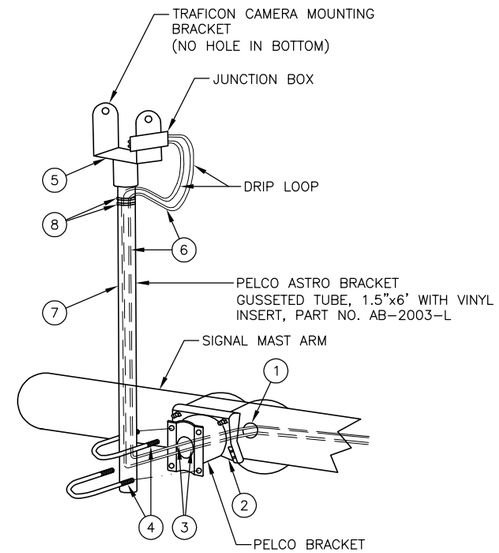

VIDEO DETECTION CAMERA ON SIGNAL POLE MAST ARM MOUNTING DETAIL

NOTES:

1. THE CONTRACTOR SHALL DRILL A 1" HOLE IN THE BACK SIDE OF THE SIGNAL MAST ARM DEBURR, & PUT A RUBBER GROMMET IN HOLE.
2. THE ASTRO BRACKET SHALL BE INSTALLED OVER THE 1" HOLE.
3. VIDEO CABLES SHALL BE PULLED THROUGH THE SIGNAL MAST ARM THROUGH THE 1" HOLE AND THROUGH THE ASTRO BRACKET.
4. BOLT 1.5" GUSSETED TUBE TO ASTRO BRACKET.
5. ATTACH VIDEO CAMERA MOUNTING BRACKET TO THE TOP OF THE GUSSETED TUBE.
6. ROUTE VIDEO CABLES IN GUSSET TO THE INSIDE OF TUBE, UP THE TUBE EXITING TUBE AT TOP OF GUSSET AND CONNECT TO VIDEO JUNCTION BOX LEAVING A DRIP LOOP IN CABLES.
7. INSTALL VINYL INSERT IN GUSSET, LEAVING NO MORE THAN A 1" GAP AT THE TOP FOR CABLES TO EXIT THE TUBE.
8. INSTALL 2 BLACK WEATHER RATED WIRE TIES AROUND TUBE WHERE CABLES EXIT AT THE TOP OF THE VINYL INSERT.

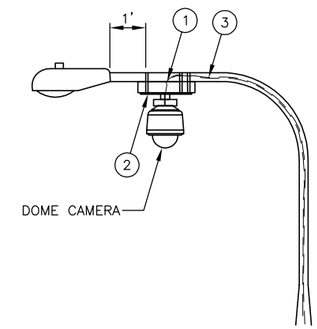

DOME CCTV CAMERA ON LUMINAIRE ARM MOUNTING DETAIL

NOTES:

1. THE CONTRACTOR SHALL DRILL A 1" HOLE IN THE TOP OF THE LUMINAIRE MAST ARM, DEBURR AND PUT A RUBBER GROMMET IN HOLE.
2. THE DOME CAMERA MOUNT SHALL BE PLACED OVER THE HOLE.
3. THE COMPOSITE CABLE SHALL BE PULLED THROUGH THE LUMINAIRE ARM, THROUGH THE 1" HOLE, THROUGH THE CAMERA MOUNT AND INTO THE CAMERA HOUSING.

60% REVIEW
CHECK PRINT
NOT FOR CONSTRUCTION

No.	Date	Revision	By	Appr.

Perteet
425-252-7700 I 1-800-615-9900
2707 Colby Avenue, Suite 900
Everett, Washington 98201

LYNNWOOD WASHINGTON

CARL J. EINFELD, STATE OF WASHINGTON, 24043, REGISTERED PROFESSIONAL ENGINEER

Drawn By MJS	Date 11/2014	SCALE
Designed By MJS	11/2014	Horiz 1"=20'
Checked By CJE	11/2014	Vert NONE
Approved By PGD	11/2014	Project Number 20100156

CITY OF LYNNWOOD

POPLAR WAY EXTENSION BRIDGE
ALDERWOOD MALL BLVD. & 33RD AVE W.
SIGNAL DETAILS

Drawing No. SG6
Sheet No. X / X of Total

Nov 06, 2014 - 3:54pm tsekulich C:\Users\TSekulich\appdata\local\temp\AcPublish_15764\20100156 SG.dwg Layout Name: SG6

SEC. 22, T. 27 N., R. 4 E., W.M.

FEDERAL AID NO. IMD-STPUL-2004(037)

WIRING SCHEDULE

NO.	CONDUIT SIZE	2-#14 TWISTED	PED DETECT 4Cb#18	VEH DETECT 2C(S)	E. V. DETECT 3C(S)	SIGNAL HEAD 5C	SIGNAL HEAD 7C	VIDEO CABLE 6CDe	ILLUM POWER #8	BARE GROUND #8	SERVICE POWER 350 MCM THWN	NOTES
1												
2												
3												
4												
5												
6												
7												
8												
9												
10												
11												
12												
13												
14												
15												
16												
17												

PUSH BUTTON SCHEDULE

PUSH BUTTON PHASE	POLE NUMBER	ARROW DIRECTION	SIGN
68	6	RIGHT	R10-3e
69	7	LEFT	R10-3e
88	8	RIGHT	R10-3e
89	5	LEFT	R10-3e

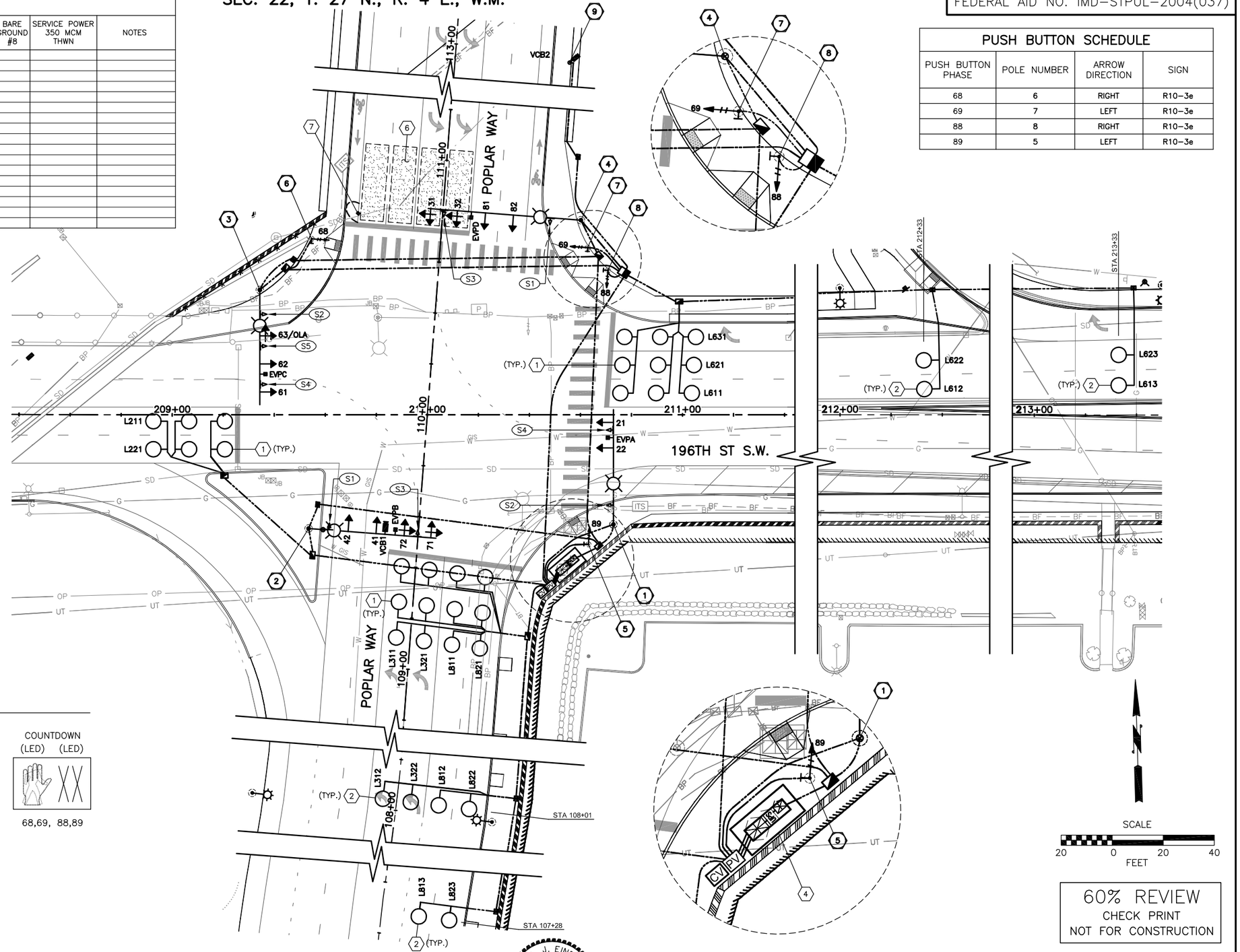

PHASING SEQUENCE DIAGRAM

	ø1	ø2	ø3	ø4
MOVEMENTS PERMITTED	NOT USED			
	NOT USED			
	ø5	ø6	ø7	ø8

OLA

PHASES ø3 AND ø7 SHALL NOT RUN CONCURRENTLY BUT IN A LEAD/LAG MODE

EMERGENCY VEHICLE PRE-EMPTIONS

	EVP A (ø2)	EVP B (ø4)	EVP C (ø6)	EVP D (ø8)
MOVEMENTS PERMITTED	ø2	ø4	ø6	ø8

SIGNAL DISPLAYS

(LED) R 12" (LED) Y 12" (LED) G 12"

22, 41, 42
62, 81, 82

(LED) R 12" (LED) Y 12" (LED) G 12"

21, 61

(LED) R 12" (LED) Y 12" (LED) G 12"

31, 32, 71, 72

(LED) R 12" (LED) Y 12" (LED) G 12" (LED) G 12"

63/OLA

COUNTDOWN (LED) (LED)

68,69, 88,89

CALL 2 BUSINESS DAYS BEFORE YOU DIG
1 800 424-5555
UTILITIES UNDERGROUND LOCATION CENTER

60% REVIEW
CHECK PRINT
NOT FOR CONSTRUCTION

No.	Date	Revision	By	Appr.

Perteet
425-252-7700 I 1-800-615-9900
2707 Colby Avenue, Suite 900
Everett, Washington 98201

LYNNWOOD WASHINGTON

CARL J. EINFELD STATE OF WASHINGTON 24043 REGISTERED PROFESSIONAL ENGINEER

Drawn By MJS	Date 11/2014	SCALE
Designed By MJS	11/2014	Horiz 1"=20'
Checked By CJE	11/2014	Vert NONE
Approved By PGD	11/2014	Project Number 20100156

CITY OF LYNNWOOD

POPLAR WAY EXTENSION BRIDGE
196TH ST SW & POPLAR WAY
SIGNAL PLAN

Drawing No. SG7

Sheet No. X of X Total

Nov 06, 2014 - 3:57pm tsekulich C:\Users\TSekulich\appdata\local\temp\AcPublish_15764\20100156 SG.dwg Layout Name: 196th-1

SIGNALIZATION SYMBOLS

SYMBOL	DESCRIPTION
	ROUND LOOP DETECTOR
	JUNCTION BOXES (TYPE 1, 2, 8)
PB	PULL BOX
CV	CABLE VAULT
	PEDESTRIAN PUSHBUTTON POST W/ PUSHBUTTON
	SIGNAL CONTROLLER
	ELECTRICAL SERVICE CABINET
UPS	UNINTERRUPTED POWER SOURCE
	TRAFFIC SIGNAL POLE W/ LUMINAIRE
	PEDESTRIAN SIGNAL HEAD
	VEHICLE SIGNAL HEAD
	VEHICLE SIGNAL HEAD W/ ARROW INDICATOR
	EMERGENCY VEHICLE DETECTOR
	VIDEO DETECTION CAMERA
	SIGNAL POLE NOTE
	WIRE NOTE
	CONSTRUCTION NOTE
	CONDUIT

SIGN LEGEND

S1

196th St SW 60x12

D3-201

S2

Poplar Way 60x12

D3-201

S3

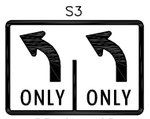

R3-8L MOD

S4

R3-2

S5

R3-5R

DISPLAY NOTES

1. ALL VEHICLE SIGNAL HEADS SHALL HAVE 12" L.E.D. LENSES. THE HOUSING SHALL BE PAINTED DARK GREEN. ALUMINUM TUNNEL VISORS SHALL BE PAINTED FLAT BLACK IN COLOR INSIDE AND SHALL BE DARK GREEN ON THE OUTSIDE. BACK PLATES SHALL BE POLYCARBONATE.
2. ALL PEDESTRIAN SIGNAL HEADS SHALL BE COUNTDOWN TYPE AND SOLID (NOT OUTLINED) L.E.D. WITH SYMBOLIC LEGENDS AND "Z-CRATE VISORS". THE ALUMINUM HOUSING SHALL BE PAINTED DARK GREEN WITH FLAT BLACK VISORS.
3. ALL MAST-ARM MOUNTED STREET NAME SIGNS SHALL BE SHEATHED WITH 3M BRAND DIAMOND GRADE SHEETING OR EQUAL AND MOUNTED WITH STAINLESS STEEL STRAPS AND BRACKETS (SEE WSDOT STD. PLAN G-30.10-03).
4. ALL VEHICLE SIGNAL HEADS SHALL HAVE TYPE "M" MOUNTING PER WSDOT STD. PLAN J-75.20-00.
5. PEDESTRIAN SIGNAL HEAD 88 SHALL HAVE TYPE "D" MOUNTING PER WSDOT STD, PLAN J-75.10-01.
6. PEDESTRIAN SIGNAL HEAD 68, 69 AND 89 SHALL HAVE TYPE "E" MOUNTING PER WSDOT STD. PLAN J-75.10-01.
7. ALL VEHICLE HEADS SHALL HAVE BACKPLATES. ALL BACKPLATES SHALL BE INSTALLED WITH A 1" WIDE STRIP OF YELLOW REFLECTIVE TAPE AROUND THE PERIMETER OF EACH BACKPLATE PER SPECIAL PROVISIONS. ALL BACKPLATES SHALL BE BLACK AND LOUVERED.
8. PEDESTRIAN PUSHBUTTONS SHALL BE APS (4-WIRE) TYPE AND INSTALLED PER MANUFACTURES REQUIREMENTS.

GENERAL NOTES

1. UTILITY LOCATION (DIAL-A-DIG) PRIOR TO CONSTRUCTION WILL BE THE RESPONSIBILITY OF THE CONTRACTOR. CONFLICTS ARE TO BE BROUGHT TO THE ATTENTION OF THE ENGINEER FOR RESOLUTION.
2. ALL WORK SHALL BE IN CONFORMANCE WITH STATE OF WASHINGTON STANDARD PLANS AND SPECIFICATIONS, EXCEPT AS MODIFIED BY CONTRACT PLANS AND PROVISIONS.
3. ALL JUNCTION BOXES AND CONDUIT RUNS SHALL BE INSTALLED AS SHOWN IN THE PLANS, LOCATIONS SHOWN ARE SCHEMATIC AND THE ENGINEER WILL PROVIDE EXACT LOCATIONS. SEE WSDOT STANDARD PLANS J-10, J-40.10-03 AND J-40.30-03.
4. UNLESS OTHERWISE SPECIFIED, ALL PROPOSED SIGNAL CONDUIT SHALL BE SCHEDULE. 80 PVC.
5. JUNCTION BOXES SHALL NOT BE PLACED IN SIDEWALKS. IF UNAVOIDABLE, JUNCTION BOXES SHALL HAVE SLIP RESISTANT LIDS AND FRAMES.
6. ALL ROADWAY CONDUIT CROSSINGS OF 196TH ST SW/SR524 SHALL BE DIRECTIONALLY BORED IN ACCORDANCE WITH STD. SPEC. 8-20.3(5).

SIGNAL POLE NOTES:

1. CONSTRUCT FOUNDATION PER WSDOT STD. PLANS J-26.10-02 AND J-26.15-01. FURNISH AND INSTALL TYPE III SIGNAL POLE WITH 40' MASTARM, ONE (1) 12' LUMINAIRE ARM, ONE (1) 250 WATT HPS-MC TYPE III LUMINAIRE, INCLUDING MOUNTINGS, TWO (2) VEHICLE SIGNAL HEADS, ONE (1) EVP DETECTOR TYPE 721, ONE (1) LANE CONTROL SIGN, ONE (1) STREET NAME SIGN, ONE (1) POLE MOUNTED TERMINAL CABINET, ONE (1) PEDESTRIAN SIGNAL HEAD, AND ONE (1) PEDESTRIAN PUSHBUTTON ASSEMBLY.
2. CONSTRUCT FOUNDATION PER WSDOT STD. PLANS J-26.10-02 AND J-26.15-01. FURNISH AND INSTALL TYPE III SIGNAL POLE WITH 50' MASTARM, ONE (1) 10' LUMINAIRE ARM, ONE (1) 250 WATT HPS-MC TYPE III LUMINAIRE, INCLUDING MOUNTINGS, FOUR (4) VEHICLE SIGNAL HEADS, ONE (1) EVP DETECTOR TYPE 721, ONE (1) VIDEO DETECTION CAMERA, ONE (1) DOME SURVEILLANCE CAMERA, ONE (1) LANE CONTROL SIGN, ONE (1) STREET NAME SIGN, AND ONE (1) POLE MOUNTED TERMINAL CABINET.
3. CONSTRUCT FOUNDATION PER WSDOT STD. PLANS J-26.10-02 AND J-26.15-01. FURNISH AND INSTALL TYPE III SIGNAL POLE WITH 55' MASTARM, ONE (1) 16' LUMINAIRE ARM, ONE (1) 250 WATT HPS-MC TYPE III LUMINAIRE, INCLUDING MOUNTINGS, TWO (2) VEHICLE SIGNAL HEADS, ONE (1) EVP DETECTOR TYPE 721, TWO (2) LANE CONTROL SIGNS, ONE (1) STREET NAME SIGN, ONE (1) POLE MOUNTED TERMINAL CABINET. ONE (1) PEDESTRIAN SIGNAL HEAD, AND ONE (1) PEDESTRIAN PUSHBUTTON ASSEMBLY.
4. CONSTRUCT FOUNDATION PER WSDOT STD. PLANS J-26.10-02 AND J-26.15-01. FURNISH AND INSTALL TYPE III SIGNAL POLE WITH 55' MASTARM, ONE (1) 16' LUMINAIRE ARM, ONE (1) 250 WATT HPS-MC TYPE III LUMINAIRE, INCLUDING MOUNTINGS, FOUR (4) VEHICLE SIGNAL HEADS, ONE (1) EVP DETECTOR TYPE 721, ONE (1) LANE CONTROL SIGN, ONE (1) STREET NAME SIGN, ONE (1) POLE MOUNTED TERMINAL CABINET. ONE (1) PEDESTRIAN SIGNAL HEAD, AND ONE (1) PEDESTRIAN PUSHBUTTON ASSEMBLY.
5. CONSTRUCT FOUNDATION PER WSDOT STD. PLANS J-21.10-03 AND J-26.15-01. FURNISH AND INSTALL TYPE PS SIGNAL POLE, ONE (1) PEDESTRIAN SIGNAL HEAD, AND ONE (1) PEDESTRIAN PUSHBUTTON ASSEMBLY.
6. CONSTRUCT FOUNDATION PER WSDOT STD. PLANS J-21.10-04 AND J-26.15-01. FURNISH AND INSTALL TYPE PS SIGNAL POLE, ONE (1) PEDESTRIAN SIGNAL HEAD, AND ONE (1) PEDESTRIAN PUSHBUTTON ASSEMBLY.
7. CONSTRUCT FOUNDATION PER WSDOT STD. PLANS J-21.10-03 AND J-26.15-01. FURNISH AND INSTALL TYPE PS SIGNAL POLE, ONE (1) PEDESTRIAN SIGNAL HEAD, AND ONE (1) PEDESTRIAN PUSHBUTTON ASSEMBLY.
8. CONSTRUCT FOUNDATION PER WSDOT STD. PLANS J-21.10-03 AND J-26.15-01. FURNISH AND INSTALL TYPE PS SIGNAL POLE, ONE (1) PEDESTRIAN SIGNAL HEAD, AND ONE (1) PEDESTRIAN PUSHBUTTON ASSEMBLY.
9. PROVIDE AND INSTALL CAMERA POLE ON BRIDGE BARRIER PER WSDOT STD. PLAN J-29.15-00 AND J-29,16-01. PROVIDE AND INSTALL ONE (1) SURVEILLANCE CAMERA, AND ONE (1) VIDEO DETECTION CAMERA PER DETAIL DWG. SG_.

CONSTRUCTION NOTES:

1. INSTALL TYPE 3 STOP LINE LOOPS, PER WSDOT STD. PLAN J-50.12-00.
2. INSTALL TYPE 3 ADVANCE LOOPS, PER WSDOT STD. PLAN J-50.12-00.
3. NOT USED THIS SHEET.
4. CONSTRUCT FOUNDATION FOR COMBINATION CONTROLLER, SERVICE, AND BACKUP POWER SOURCE (BPS), PER WSDOT STD. PLAN J-10.10-02. LOCATION AND ORIENTATION OF FOUNDATION AND CABINETS SHALL BE APPROVED BY THE ENGINEER PRIOR TO INSTALLING CONDUITS.
5. PROVIDE AND INSTALL DOUBLE 332/2070 CABINET. PROVIDE AND INSTALL SERVICE AND BPS. WIRE TO THE INTERSECTION CONFIGURATION WITH ALL ASSOCIATED EQUIPMENT. MAKE NECESSARY FIELD CONNECTIONS, SEE WSDOT STANDARD SPECIFICATIONS AND SPECIAL PROVISIONS FOR REQUIRED TESTS.
6. VIDEO DETECTION ZONE, FOR REFERENCE ONLY.
7. PROVIDE AND INSTALL MICRORADAR SENSOR FOR BIKE LANE PER MANUFACTURER'S REQUIREMENTS.

60% REVIEW
CHECK PRINT
NOT FOR CONSTRUCTION

No.	Date	Revision	By	Appr.

Perteet
425-252-7700 I 1-800-615-9900
2707 Colby Avenue, Suite 900
Everett, Washington 98201

LYNNWOOD WASHINGTON

CARL J. EINFELD, STATE OF WASHINGTON, 24043, REGISTERED PROFESSIONAL ENGINEER

Drawn By MJS	Date 11/2014	SCALE
Designed By MJS	11/2014	Horiz NONE
Checked By CJE	11/2014	Vert NONE
Approved By PGD	11/2014	Project Number 20100156

CITY OF LYNNWOOD

POPLAR WAY EXTENSION BRIDGE
196TH ST SW & POPLAR WAY
SIGNAL NOTES

Drawing No. SG8

Sheet No. X of X Total

Nov 06, 2014 - 3:57pm tsekulich C:\Users\TSekulich\appdata\local\temp\AcPublish_15764\20100156 SG.dwg Layout Name: 196th-2

FIELD WIRE TERMINATIONS

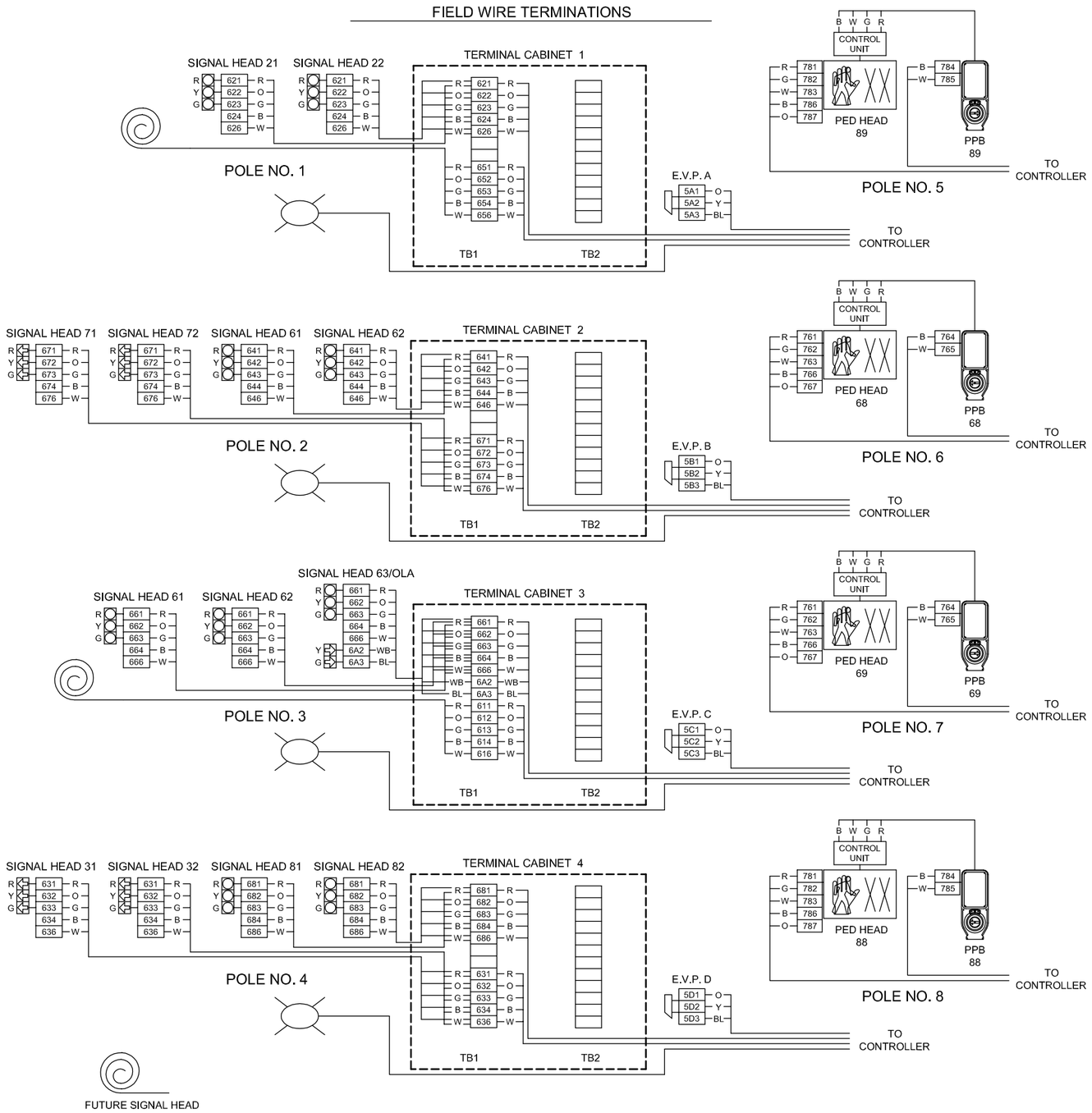

CABINET WIRE TERMINATIONS

DETECTION INPUT TERMINALS

TB 2

816	1	I1D	Ø1U
817	2	I1E	
818	3	I1J	Ø1L
819	4	I1K	
921	5	I2D	Ø2U
922	6	I2E	
923	7	I2J	Ø2L
924	8	I2K	
925	9	I3D	Ø2U
926	10	I3E	
927	11	I3J	Ø2L
928	12	I3K	

TB 3

Ø5U	J1D	1	856		
	J1E	2	857		
Ø5L	J1J	3	858		
	J1K	4	859		
Ø6U	J2D	5	961	B/W	613
	J2E	6	962		
Ø6L	J2J	7	963	B/W	623
	J2K	8	964		
Ø6U	J3D	9	965	B/W	612
	J3E	10	966		
Ø6L	J3J	11	967	B/W	622
	J3K	12	968		

TB 4

211 B/W	826	1	I4D	Ø2U	
	827	2	I4E		
221 B/W	828	3	I4J	Ø2L	
	829	4	I4K		
311 B/W	836	5	I5D	Ø3U	
	837	6	I5E		
321 B/W	838	7	I5J	Ø3L	
	839	8	I5K		
	941	9	I6D	Ø4U	
	942	10	I6E		
	943	11	I6J	Ø4L	
	944	12	I6K		

TB 5

Ø6U	J4D	1	866	B/W	611
	J4E	2	867		
Ø6L	J4J	3	868	B/W	621
	J4K	4	869		
Ø7U	J5D	5	876	R/B	VCB1
	J5E	6	877		
Ø7L	J5J	7	878		
	J5K	8	879		
Ø8U	J6D	9	981	B/W	813
	J6E	10	982		
Ø8L	J6J	11	983	B/W	823
	J6K	12	984		

TB 6

	945	1	I7D	Ø4U	
	946	2	I7E		
	947	3	I7J	Ø4L	
	948	4	I7K		
	846	5	I8D	Ø4U	
	847	6	I8E		
	848	7	I8J	Ø4L	
	849	8	I8K		
312 B/W	911	9	I9D	Ø3U	
	912	10	I9E		
322 B/W	931	11	I9J	Ø3L	
	932	12	I9K		

TB 7

Ø8U	J7D	1	985	B/W	812
	J7E	2	986		
Ø8L	J7J	3	987	B/W	822
	J7K	4	988		
Ø8U	J8D	5	886	B/W	811
	J8E	6	887		
Ø8L	J8J	7	888	B/W	821
	J8K	8	889		
Ø6U	J9D	9	951	B/W	631
	J9E	10	952		
	J9J	11	971		
	J9K	12	972		

TB 8

		1	
		2	
		3	
	724	4	I12D Ø2P
	744	5	I12J Ø4P
	725/745	6	I12K COM
PPB 68,69 B	764	7	I13D Ø6P
PPB 88,89 B	784	8	I13J Ø8P
PPB 68,69,88,89 W	765/785	9	I13K COM
		10	
		11	
		12	

TB 9

		1			
DC-		2	5AC3	BL	A&C
	J13K	3	5BD3	BL	B&D
EVA	J12D	4	5A2	Y	A
EVC	J12J	5	5C2	Y	C
DC+	J12E	6	5AC1	O	A&C
EVB	J13D	7	5B2	Y	B
EVD	J13J	8	5D2	Y	D
DC+	J13E	9	5BD1	O	B&D
RR1	J14D	10	516		
RR2	J14J	11	517		
COM	J14E	12	518		

COORDINATION

TB0

BL	541	
W	542	
OR	543	
W	544	
GN	545	
W	546	
BR	547	
W	548	
GR	549	
W	55O	
BL	551	
R	552	

SERVICE PANEL

TBS

B	5O1	1	AC+
GRD		2	CG
W	5O2	3	AC-
		4	
		5	

AUXILIARY PREEMPTION

(CONNECTED VIA 262W WIRE HARNESS TO M262 DISCRIMINATOR)

TB10

1	2	3	4	5	6	7	8	9	10	11	12
A&C AUX	A&C AUX	A AUX	A AUX	C AUX	C AUX	B&D AUX	B&D AUX	B AUX	B AUX	D AUX	D AUX
WB		BL				R		B			
OLA		OLA				VCB2		VCB2			

DISPLAY OUTPUT TERMINALS

41/42 R	641	101	Ø4R
O	642	102	Ø4Y
G	643	103	Ø4G
	741	104	Ø4DW
	5B4	105	EVIB
	742	106	Ø4W
81/82 R	681	107	Ø8R
O	682	108	Ø8Y
G	683	109	Ø8G
88/89 R	781	110	Ø8DW
	5D4	111	EVID
G	782	112	Ø8W

	721	113	Ø2DW
	5A4	114	EVIA
	722	115	Ø2W
31/32 R	631	116	Ø3R
O	632	117	Ø3Y
G	633	118	Ø3G
68/69 O	761	119	Ø6DW
	5C4	120	EVIC
BL	762	121	Ø6W
71/72 R	671	122	Ø7R
O	672	123	Ø7Y
G	673	124	Ø7G

	611	125	Ø1R
	612	126	Ø1Y
	613	127	Ø1G
21/22 R	621	128	Ø2R
O	622	129	Ø2Y
G	623	130	Ø2G
	651	131	Ø5R
	652	132	Ø5Y
	653	133	Ø5G
61/62/63 R	661	134	Ø6R
O	662	135	Ø6Y
G	663	136	Ø6G

NOTE: TERMINATE ALL WIRING IDENTIFIED AS AC- (6*6 AND 7*3) AT THE AC-BUSS.

SEAL AND COIL ALL SPARE CONDUCTORS AND STORE NEATLY ON THE CABINET FLOOR.

AFTER FIELD WIRES ARE INSTALLED, INSTALL 2C(SH) JUMPER WIRES BETWEEN THE FOLLOWING INPUT TERMINAL PAIRS:

816 --B-- 967
817 --W-- 968

856 --B-- 927
857 --W-- 928

876 --B-- 947
877 --W-- 948

836 --B-- 987
837 --W-- 988

DELETE THIS SECTION IF THE 239 PROGRAM IS SPECIFIED

60% REVIEW
CHECK PRINT
NOT FOR CONSTRUCTION

No.	Date	Revision	By	Appr.

Perteet
425-252-7700 I 1-800-615-9900
2707 Colby Avenue, Suite 900
Everett, Washington 98201

LYNNWOOD WASHINGTON

CARL J. EINFELD, STATE OF WASHINGTON, 24043, REGISTERED PROFESSIONAL ENGINEER

Drawn By MJS	Date 11/2014	SCALE
Designed By MJS	11/2014	Horiz NONE
Checked By CJE	11/2014	Vert NONE
Approved By PGD	11/2014	Project Number 20100156

CITY OF LYNNWOOD

POPLAR WAY EXTENSION BRIDGE
196TH ST SW & POPLAR WAY
WIRING TERMINATIONS

Drawing No. SG9

Sheet No. X / X of Total

Nov 06, 2014 - 3:58pm tsekulich C:\Users\TSekulich\appdata\local\temp\AcPublish_15764\20100156 SG.dwg Layout Name: 196th-3

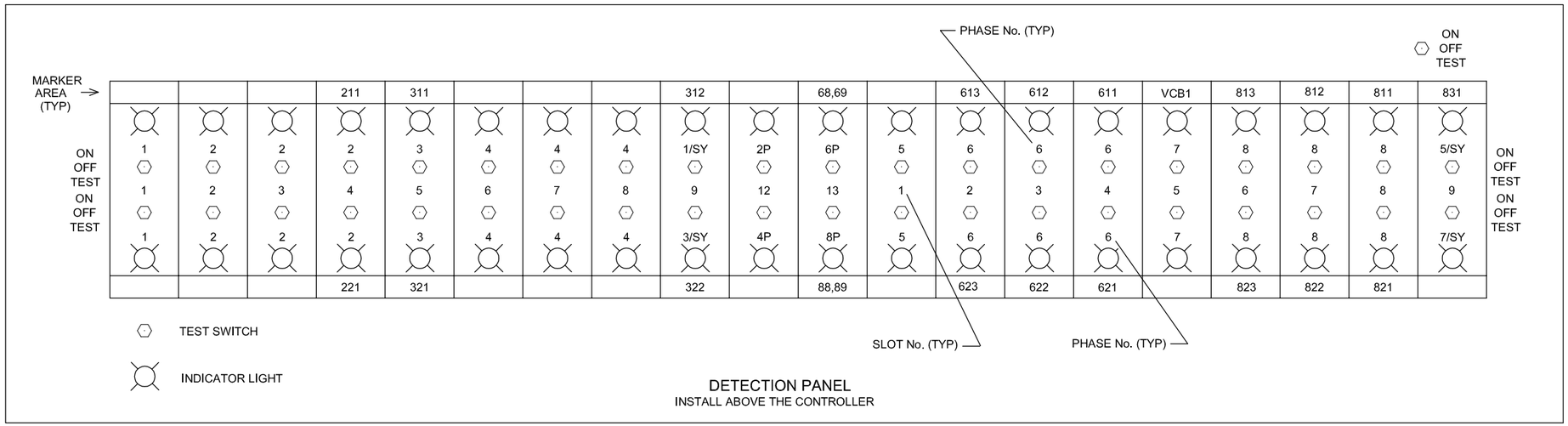

DETECTION PANEL
INSTALL ABOVE THE CONTROLLER

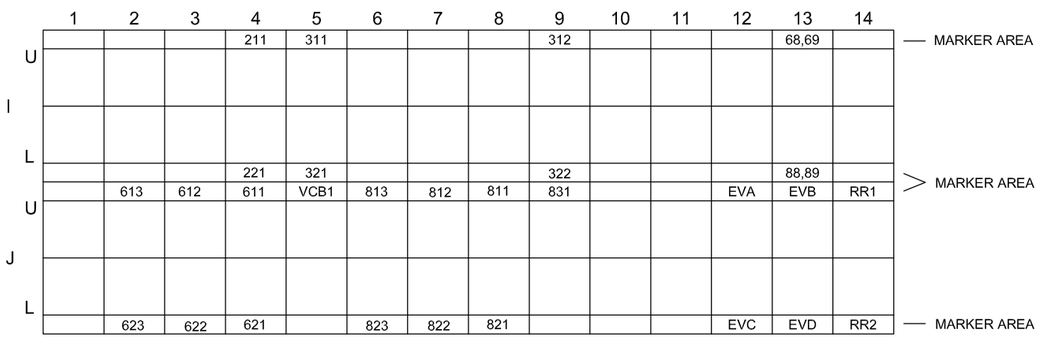

INPUT FILE MARKING DETAIL

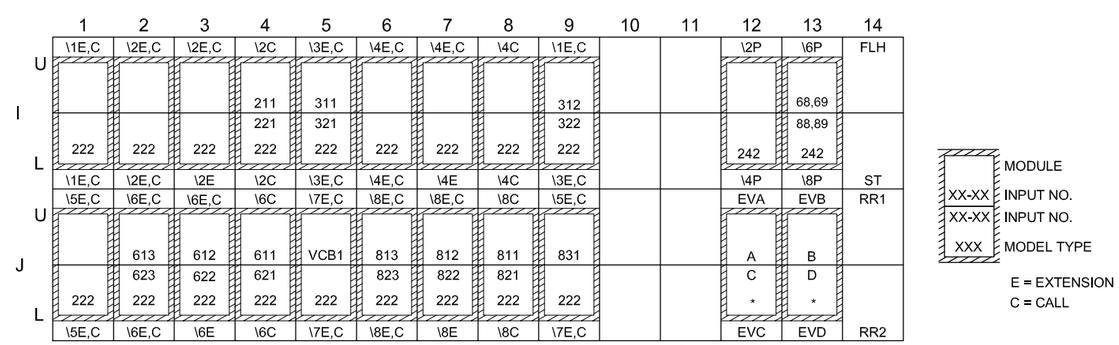

* SEE SPECIAL PROVISIONS

INPUT FILE LAYOUT - PROGRAM WAPITI W4IKS

DISPLAY PANEL

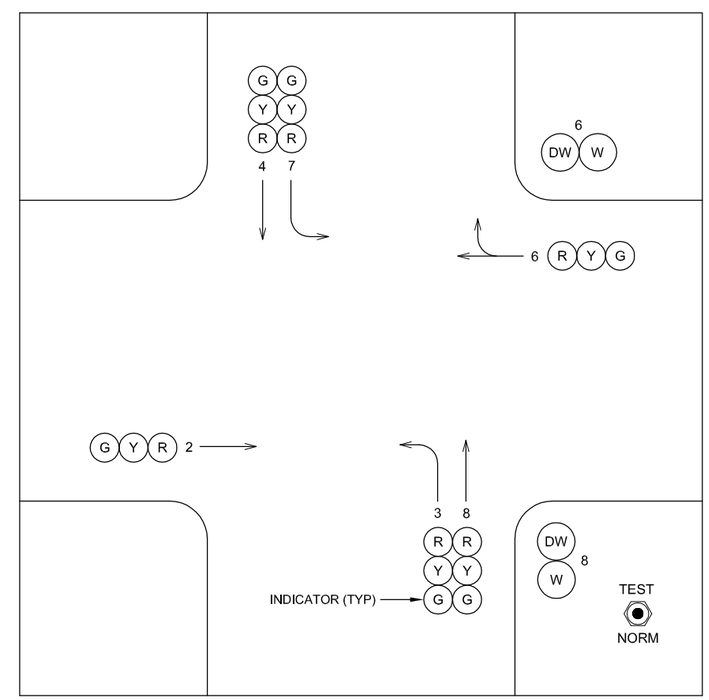

60% REVIEW
CHECK PRINT
NOT FOR CONSTRUCTION

No.	Date	Revision	By	Appr.

Perteet
425-252-7700 I 1-800-615-9900
2707 Colby Avenue, Suite 900
Everett, Washington 98201

LYNNWOOD WASHINGTON

CARL J. EINFELD STATE OF WASHINGTON 24043 REGISTERED PROFESSIONAL ENGINEER

Drawn By MJS	Date 11/2014	SCALE
Designed By MJS	11/2014	Horiz NONE
Checked By CJE	11/2014	Vert NONE
Approved By PGD	11/2014	Project Number 20100156

CITY OF LYNNWOOD
POPLAR WAY EXTENSION BRIDGE
196TH ST SW & POPLAR WAY
WIRING TERMINATIONS

Drawing No. SG10
Sheet No. X of X Total

Nov 06, 2014 - 3:58pm tsekulich C:\Users\TSekulich\appdata\local\temp\AcPublish_15764\20100156 SG.dwg Layout Name: 196th-4

NOTES

1. MOUNTING TENON TO BE INSTALLED BY FABRICATOR AT OFFSET DISTANCES INDICATED IN CHART. IF TYPE "N" MOUNTING IS USED, DRILL 1" HOLE IN MAST ARM AND INSTALL PLASTIC SPLIT BUSHING FOR CABLE ENTRANCE.
2. FIELD INSTALLED.
3. NOT USED.
4. FOUNDATIONS SHALL CONFORM TO THE WSDOT STD. PLANS J-28.30-01, J-20.15-00, J-20.16-00, J-20.20-00, J-20.26-00, J-21.10-00, J-21.15-00, J-21.16-00, J-21.17-00, J-21.20-00, J-22.15-00, J-22.16-00, J-7c, J-26.10-00 OR WSDOT PLAN SHEET IS-1.
5. ALL TYPE III SIGNAL STANDARDS AND STREET LIGHT STANDARDS SHALL HAVE BOLT ON LUMINAIRE ARMS. THE BOLTS AND/OR NUTS SHALL BE FIELD INSTALLED AND BE ACCESSIBLE AFTER INSTALLATION FROM OUTSIDE OF POLE.

* INSTALL TENON FOR FUTURE DISPLAY

** TOP OF POLE FOUNDATION ELEVATION IS TO BE VERIFIED BY ENGINEER AFTER SIDEWALK GRADES ARE SET.

\+ WIND LOAD CALCULATIONS BASED ON FUTURE LOADINGS.

LEGEND

A. VEHICLE SIGNAL DISPLAY
B. SIGN, WSDOT STD. PLAN G-30.10-03
C. LUMINAIRE ARM
D. PRE-EMPT DETECTOR
E. SIGNAL MAST ARM
G. LUMINAIRE
G. PEDESTRIAN SIGNAL DISPLAY
H. TERMINAL CABINET
I. PRE-EMPT INDICATOR
J. PEDESTRIAN PUSHBUTTON ASSEMBLY, PER MANUFACTURERS REQUIREMENTS
K. HANDHOLE, WSDOT STD. PLAN J-7c OR J-28.50-00
L. STOPLINE VIDEO DETECTION CAMERA
M. DOWNSTREAM VIDEO DETECTION CAMERA
N. DOME SURVEILLANCE CAMERA

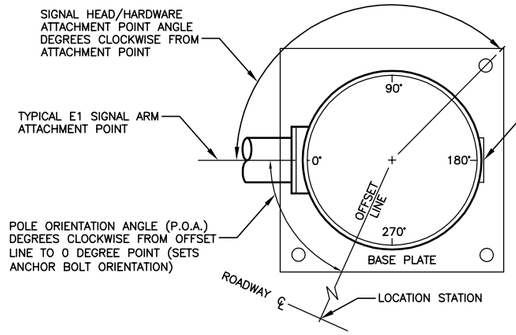

POLE ORIENTATION & ATTACHMENT POINT DETAIL
PLAN VIEW

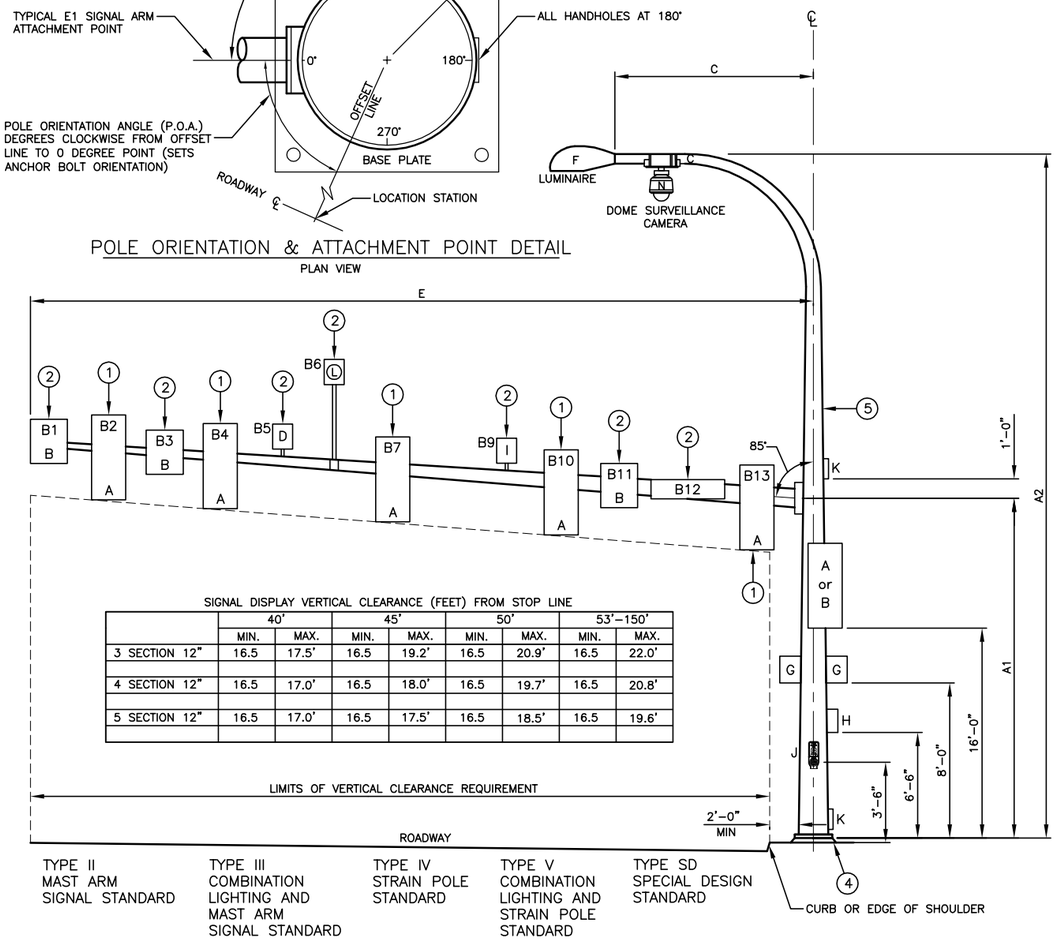

SIGNAL DISPLAY VERTICAL CLEARANCE (FEET) FROM STOP LINE

	40'		45'		50'		53'-150'	
	MIN.	MAX.	MIN.	MAX.	MIN.	MAX.	MIN.	MAX.
3 SECTION 12"	16.5	17.5'	16.5	19.2'	16.5	20.9'	16.5	22.0'
4 SECTION 12"	16.5	17.0'	16.5	18.0'	16.5	19.7'	16.5	20.8'
5 SECTION 12"	16.5	17.0'	16.5	17.5'	16.5	18.5'	16.5	19.6'

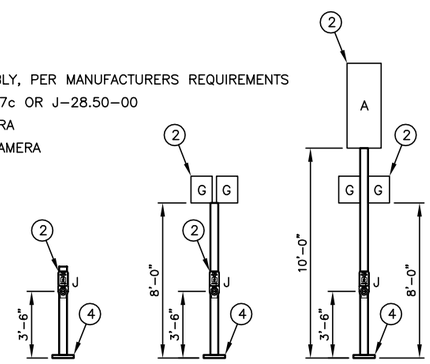

TYPE PPB PPB POST | TYPE PS PED. HEAD STANDARD | TYPE I VEHICLE HEAD STANDARD | TYPE II MAST ARM SIGNAL STANDARD | TYPE III COMBINATION LIGHTING AND MAST ARM SIGNAL STANDARD | TYPE IV STRAIN POLE STANDARD | TYPE V COMBINATION LIGHTING AND STRAIN POLE STANDARD | TYPE SD SPECIAL DESIGN STANDARD

60% REVIEW
CHECK PRINT
NOT FOR CONSTRUCTION

SIGNAL STANDARD DETAIL CHART

STD. NO.	FIELD LOCATION STATION	OFFSET (FT)	P.O.A.	TYPE	MOUNTING HEIGHT (FT) A1	A2	ARM LENGTH (FT) E	C	OFFSET DISTANCES (FT) (Z) (POLE CL TO ATTACHMENT POINT) B1	B2	B3	B4	B5	B6	B7	B8	B9	B10	B11	B12	B13
1	210+72.9	43.0 RT	0	III	–	35	45	16		40	37	30	34							8	
2	109+52.0	43.0 LT	0	III	–	35	50	10		48	43	37.5	34	30	26.5			15.5		8	
3	209+34.3	49.0 LT	0	III	–	35	45	14		40	37	29	33		18				22	10	
4	110+80.6	54.2 RT	0	III	–	35	60	16		59	54	48.5	43		37.5			26.5		12	
5	210+63.1	50.8 RT		PS																	
6	110+65.3	50.5 LT		PS																	
7	110+70.1	57.7 RT		PS																	
8	210+70.8	56.6 LT		PS																	

STD. NO.	WINDLOAD AREAS (FT) (X)(Y) B1	B2	B3	B4	B7	B10	B11	B12	B13	(X)(Y)(Z) TOTAL (FT³)	POLE ATTACHMENT POINT ANGLES (DEG.) a/b	c	d	e	g	h	j1	j2	k1	k2	FOUNDATION DEPTH (FT) 3' RD	3' SQ	4' RD	TOP OF FOUNDATION ELEVATION	REMARKS
1		9.2	6.3	9.2				5		1417.1															– PSF
2		9.2	8.5	9.2	9.2	9.2		5		2078.5															– PSF
3		9.2	6.3	9.2	11.6		6.3	5		1765.3															– PSF
4		9.2	8.5	9.2	9.2	9.2		5		2596.8															– PSF
5																									
6																									
7																									
8																									

* INSTALL TENON FOR FUTURE DISPLAY
** TOP OF FOUNDATION ELEVATION IS TO BE VERIFIED BY ENGINEER AFTER SIDEWALK GRADES ARE SET

\+ WIND LOAD CALCULATIONS BASED ON FUTURE LOADINGS.

No.	Date	Revision	By	Appr.

Perteet
425-252-7700 I 1-800-615-9900
2707 Colby Avenue, Suite 900
Everett, Washington 98201

LYNNWOOD WASHINGTON

CARL J. EINFELD, STATE OF WASHINGTON, 24043, REGISTERED PROFESSIONAL ENGINEER

Drawn By MJS	Date 11/2014	SCALE
Designed By MJS	11/2014	Horiz NONE
Checked By CJE	11/2014	Vert NONE
Approved By PGD	11/2014	Project Number 20100156

CITY OF LYNNWOOD
POPLAR WAY EXTENSION BRIDGE
196TH ST SW & POPLAR WAY
SIGNAL POLE SCHEDULE

Drawing No. SG11
Sheet No. X / X of Total

Nov 06, 2014 - 3:58pm tsekulich C:\Users\TSekulich\appdata\local\temp\AcPublish_15764\20100156 SG.dwg Layout Name: 196th-5

FEDERAL AID NO. IMD-STPUL-2004(037)

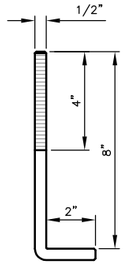

ANCHOR BOLT

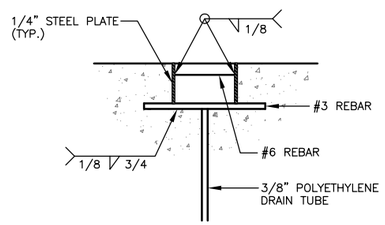

SECTION B-B

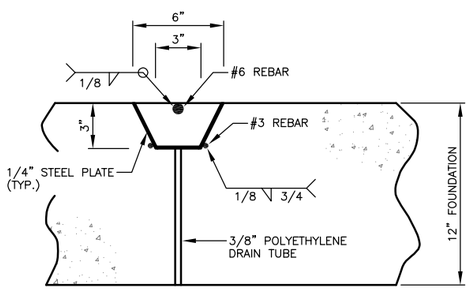

SECTION A-A

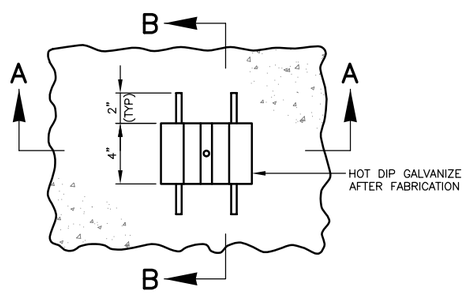

GENERATOR ANTI-THEFT TIE DOWN UNIT

FABRICATE IF NOT AVAILABLE COMMERCIALLY

CONSTRUCTION NOTES

1. DRIVE GROUND RODS BEFORE PLACING CONCRETE. MOVE ROD(S) AND DRAIN TILE(S) WITH COVER(S) AS REQUIRED TO ACHIEVE FULL GROUND PENETRATION. MAINTAIN A 6' MINIMUM CLEARANCE BETWEEN GROUND RODS AND 6" FROM FOUNDATION EDGE AS DETAILED ON STD. PLAN J-9a "TYPICAL GROUNDING DETAILS".
2. ALL GRS CONDUITS PENETRATING ALL CABINETS, SHALL BE TERMINATED WITH GROUNDING END BUSHING AND BONDED TO THE CABINET GROUNDING BUS. ALL PVC CONDUIT PENETRATING CABINET SHALL BE TERMINATED BELL BUSHING.
3. INSTALL CONDUIT COUPLINGS ON ALL CONDUITS. PLACE COUPLINGS FLUSH WITH TOP OF CONCRETE FOUNDATION. IF PVC CONDUITS SPECIFIED THE 2" CONDUIT STUB AND END BELL BUSHING SHALL NOT BE GLUED TO COUPLING.
4. 4" DIA. x 1/2" DEEP SUMP. SLOPE FOUNDATION WITHIN CABINET FOOTPRINT TOWARDS SUMP. 3/8" POLYETHYLENE OR COPPER DRAIN PIPE.
5. THE TYPE D SERVICE SHALL NOT BE INSTALLED ON 3" RAISED SECTION. ALL OTHER CABINETS SHALL BE INSTALLED ON 3" RAISED SECTION.

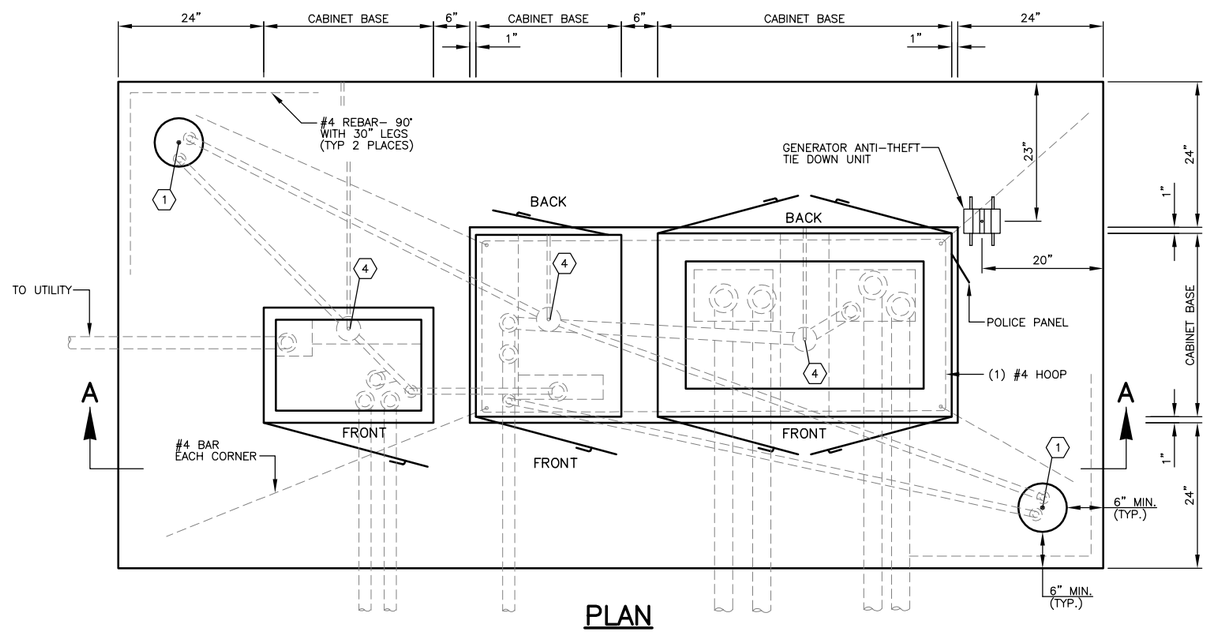

PLAN

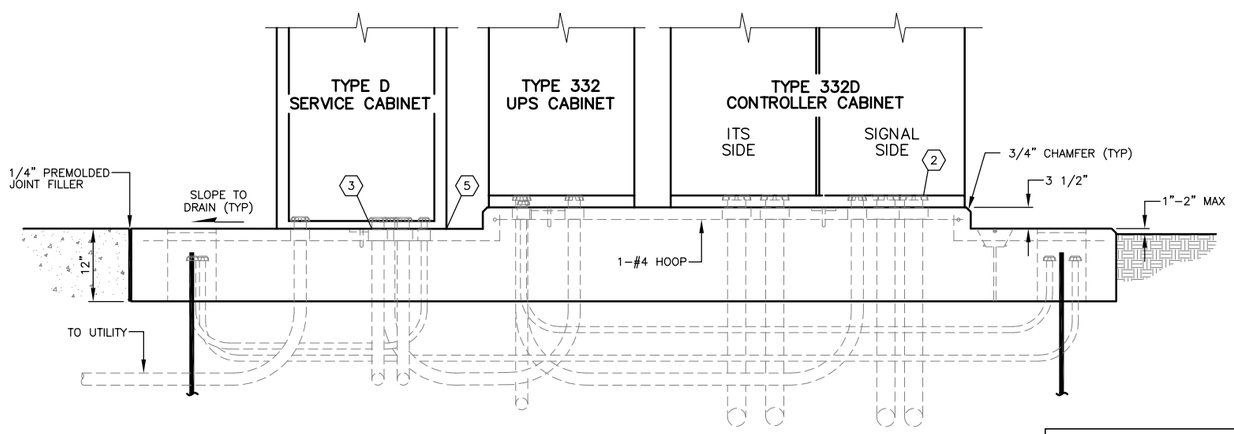

ELEVATION SECTION A-A

THREE CABINET FOUNDATION
(TYPE D SERVICE, TYPE 332 UPS CABINET & TYPE 332D CONTROLLER CABINET SHOWN)

60% REVIEW
CHECK PRINT
NOT FOR CONSTRUCTION

GENERAL NOTES

1. THE CABINETS SHOWN IN THESE DETAILS ARE SHOWN FOR ILLUSTRATIVE PURPOSES ONLY. THE CONTRACTOR SHALL VERIFY WHICH CABINET TYPES ARE CALLED OUT FOR INSTALLATION IN THE PLANS AND SUBSTITUTE THOSE CABINETS IN PLACE OF THE CABINETS SHOWN IN THESE DETAILS. THE CONTRACTOR SHALL INSTALL EACH CABINET TYPE IN THE LOCATIONS SHOWN IN THESE DETAILS.
2. THE CONTRACTOR SHALL INSTALL THE CONDUITS IN THE LOCATIONS SHOWN IN THESE DETAILS.
3. THE GROUND RODS, DRAIN TILES, ASSOCIATED CONDUITS, AND #4 REBAR- 90 DEGREE WITH 30" LEGS ARE ONLY REQUIRED IN FOUNDATIONS THAT WILL HAVE EITHER A TRANSFORMER OR SERVICE CABINET INSTALLED ON IT. THE GROUND RODS, DRAIN TILES, ASSOCIATED CONDUITS, AND #4 REBAR- 90 DEGREE WITH 30" LEGS CAN BE OMITTED FROM ALL OTHER FOUNDATIONS.
4. THE CABINETS SHALL BE ATTACHED TO THE FOUNDATION WITH 4 EACH,"x8"x2"x4" HOT DIP GALVANIZED ANCHOR BOLTS, HOT DIP WASHERS AND HOT DIP NUTS. AS AN ALTERNATIVE, THE CABINETS SHALL BE ATTACHED TO THE FOUNDATION WITH STAINLESS STEEL EPOXY ANCHORS PER THE MANUFACTURER'S RECOMMENDATIONS. BOLTS SHALL EXTEND A MINIMUM OF 1-1/2" AND A MAXIMUM OF 2" ABOVE THE CONCRETE PAD.
5. ALL REINFORCING STEEL SHALL HAVE A MINIMUM OF 2" CLEAR COVER.
6. PLACE A BEAD OF SILICONE BETWEEN CABINETS AND THE FOUNDATION.
7. SEE STANDARD PLAN J-60.05-00 "TYPICAL GROUNDING DETAILS" FOR GROUNDING DETAILS. TWO GROUND RODS ARE REQUIRED FOR FOUNDATION WITH A SERVICE CABINET OR TRANSFORMER CABINET.
8. INSTALL CONDUITS AS INDICATED IN PLANS. CONDUIT SHALL EXTEND 2" ABOVE THE COUPLING.
9. CONCRETE SHALL BE CLASS 3000.
10. VERIFY DEAD FRONT LOCATION FROM MANUFACTURER PRIOR TO PLACING CONDUIT IN FOUNDATION.

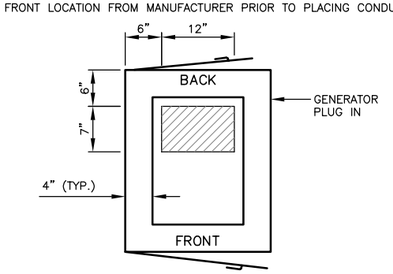

TYPE 332 UPS CABINET

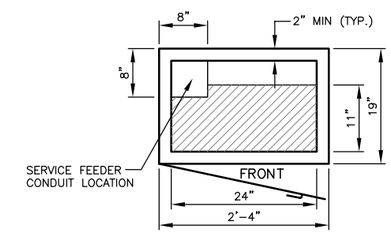

TYPE D SERVICE CABINET

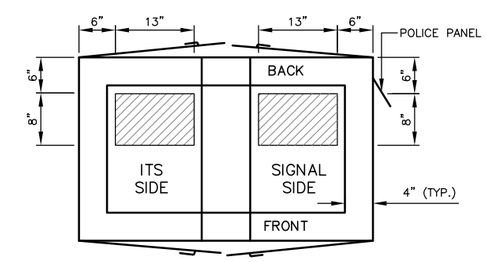

TYPE 332D CONTROLLER CABINET

CABINET FOOTPRINT & CONDUIT PLACEMENT LOCATIONS

No.	Date	Revision	By	Appr.

Perteet
425-252-7700 I 1-800-615-9900
2707 Colby Avenue, Suite 900
Everett, Washington 98201

LYNNWOOD WASHINGTON

CARL J. EINFELD, STATE OF WASHINGTON, 24043, REGISTERED PROFESSIONAL ENGINEER

Drawn By MJS	Date 11/2014	SCALE
Designed By MJS	11/2014	Horiz NONE
Checked By CJE	11/2014	Vert NONE
Approved By PGD	11/2014	Project Number 20100156

CITY OF LYNNWOOD
POPLAR WAY EXTENSION BRIDGE
196TH ST SW & POPLAR WAY
SIGNAL POLE SCHEDULE

Drawing No. SG12
Sheet No. X of X Total

Nov 06, 2014 - 3:56pm tsekulich C:\Users\TSekulich\appdata\local\temp\AcPublish_15764\20100156 SG.dwg Layout Name: 196th-6

FEDERAL AID NO. IMD-STPUL-2004(037)

FIELD WIRE TERMINATIONS

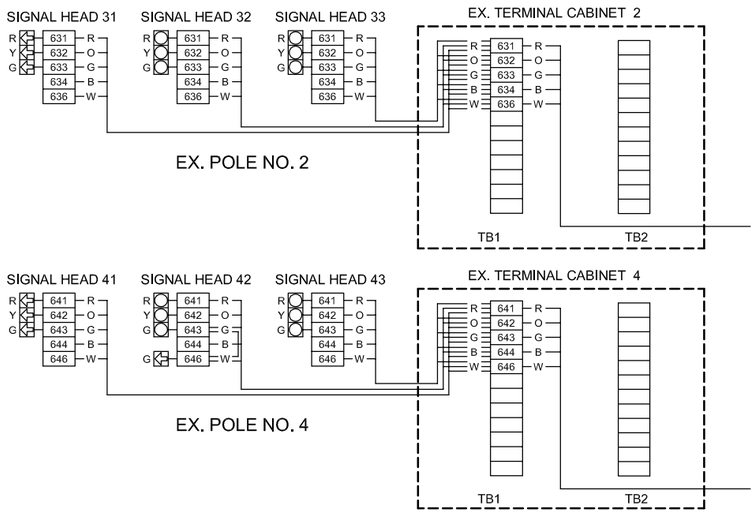

DISPLAY OUTPUT TERMINALS

41	641	101	Ø4R
42	642	102	Ø4Y
43	643	103	Ø4G
	741	104	Ø4DW
	5B4	105	EVIB
	742	106	Ø4W
	681	107	Ø8R
	682	108	Ø8Y
	683	109	Ø8G
	781	110	Ø8DW
	5D4	111	EVID
	782	112	Ø8W

721	113	Ø2DW
5A4	114	EVIA
722	115	Ø2W
631	116	Ø3R
632	117	Ø3Y
633	118	Ø3G
761	119	Ø6DW
5C4	120	EVIC
762	121	Ø6W
671	122	Ø7R
672	123	Ø7Y
673	124	Ø7G

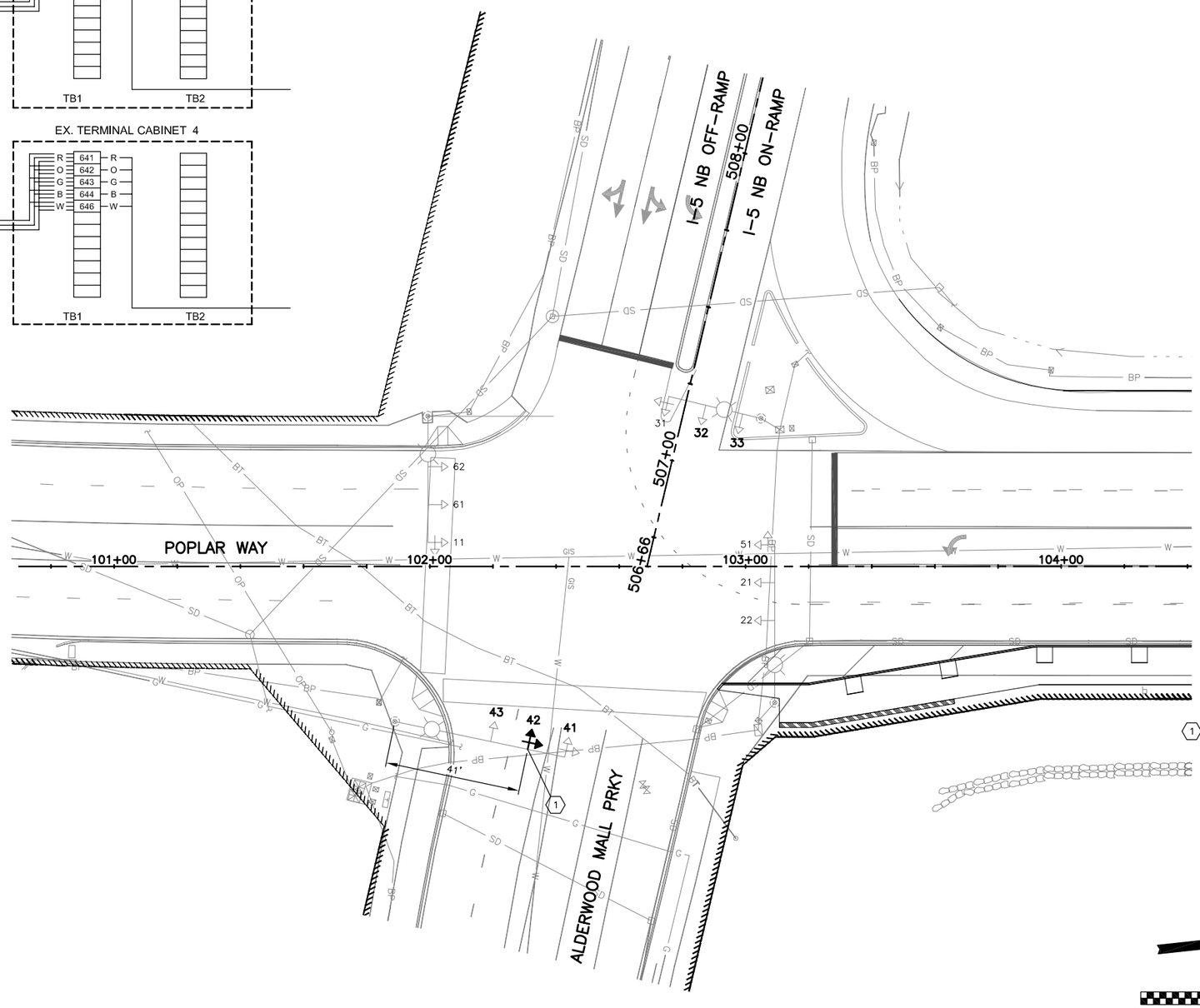

PHASING SEQUENCE DIAGRAM

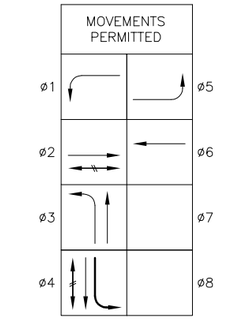

PHASE ø3 AND ø4 ARE SPLIT PHASE

SIGNAL DISPLAYS

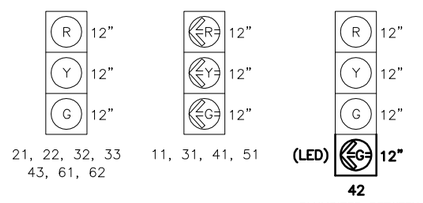

CONSTRUCTION NOTES:

1. ADD LEFT TURN ARROW SECTION TO BOTTOM OF EXISTING SIGNAL HEAD AND REMOUNT SIGNAL HEAD BETWEEN RED AND YELLOW HEADS.

SCALE
20 0 20 40
FEET

60% REVIEW
CHECK PRINT
NOT FOR CONSTRUCTION

No.	Date	Revision	By	Appr.

Perteet
425-252-7700 I 1-800-615-9900
2707 Colby Avenue, Suite 900
Everett, Washington 98201

LYNNWOOD WASHINGTON

CARL J. EINFELD STATE OF WASHINGTON 24043 REGISTERED PROFESSIONAL ENGINEER

Drawn By MJS	Date 11/2014	SCALE	
Designed By MJS	11/2014	Horiz NONE	
Checked By CJE	11/2014	Vert NONE	
Approved By PGD	11/2014	Project Number 20100156	

CITY OF LYNNWOOD
POPLAR WAY EXTENSION BRIDGE
POPLAR WAY & ALDERWOOD MALL PRKY
SIGNAL PLAN

Drawing No. SG13
Sheet No. X / X of Total

Nov 06, 2014 - 3:58pm tsekulich C:\Users\TSekulich\appdata\local\temp\AcPublish_15764\20100156 SG.dwg Layout Name: SG7X

SEC. 22, T. 27 N., R. 4 E., W.M.

FEDERAL AID NO. IMD-STPUL-2004(037)

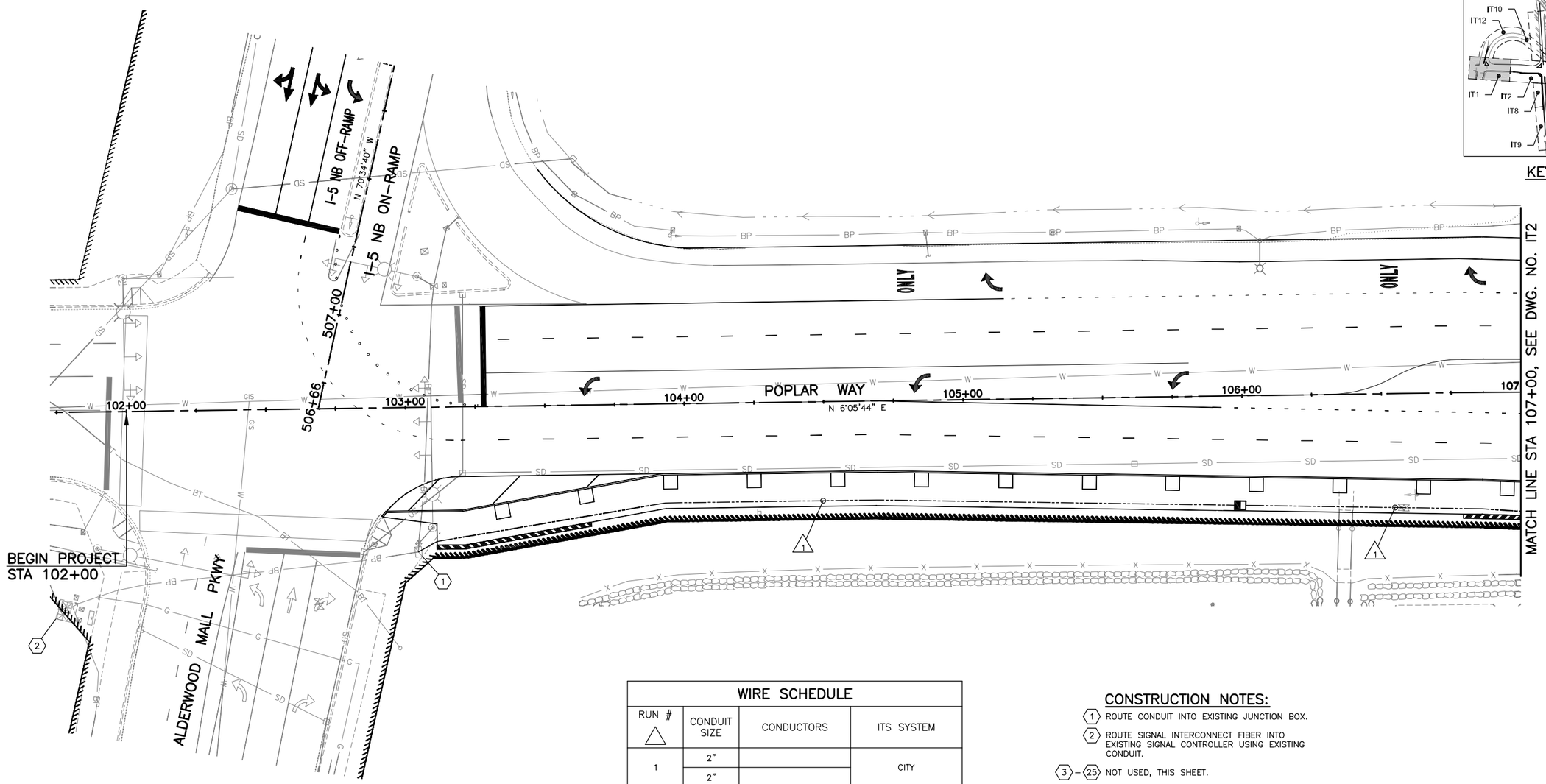

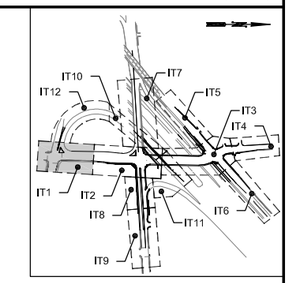

KEY MAP
NTS

WIRE SCHEDULE			
RUN # △	CONDUIT SIZE	CONDUCTORS	ITS SYSTEM
1	2"		CITY
	2"		
2	2"		CITY
3	2"		WSDOT
	2"		
4	2"		WSDOT
5	2"		WSDOT
6	EX. 2"		WSDOT

NOTE: SEE BRIDGE PLANS FOR CONDUIT AND JUNCTION BOX INSTALLATION IN BRIDGE BARRIER.

CONSTRUCTION NOTES:

1. ROUTE CONDUIT INTO EXISTING JUNCTION BOX.
2. ROUTE SIGNAL INTERCONNECT FIBER INTO EXISTING SIGNAL CONTROLLER USING EXISTING CONDUIT.

3 – 25 NOT USED, THIS SHEET.

SCALE
20 0 20 40
FEET

60% REVIEW
CHECK PRINT
NOT FOR CONSTRUCTION

No.	Date	Revision	By	Appr.

Perteet
425-252-7700 I 1-800-615-9900
2707 Colby Avenue, Suite 900
Everett, Washington 98201

LYNNWOOD WASHINGTON

CARL J. EINFELD STATE OF WASHINGTON 24043 REGISTERED PROFESSIONAL ENGINEER

Drawn By MJS	Date 11/2014	SCALE
Designed By MAM	11/2014	Horiz 1"=20'
Checked By CJE	11/2014	Vert
Approved By PGD	11/2014	Project Number 20100156

CITY OF LYNNWOOD

POPLAR WAY EXTENSION BRIDGE
B.O.P. TO STA 107+00
ITS PLAN

Drawing No. IT1
Sheet No. X of Total

Nov 06, 2014 - 3:42pm mikes X:\Lynnwood, City of\Projects\20100156 - Poplar Way Extension Bridge\CADD\Plan Sheets\20100156 IT.dwg Layout Name:IT1

SEC. 15 & 22, T. 27 N., R. 4 E., W.M.

FEDERAL AID NO. IMD-STPUL-2004(037)

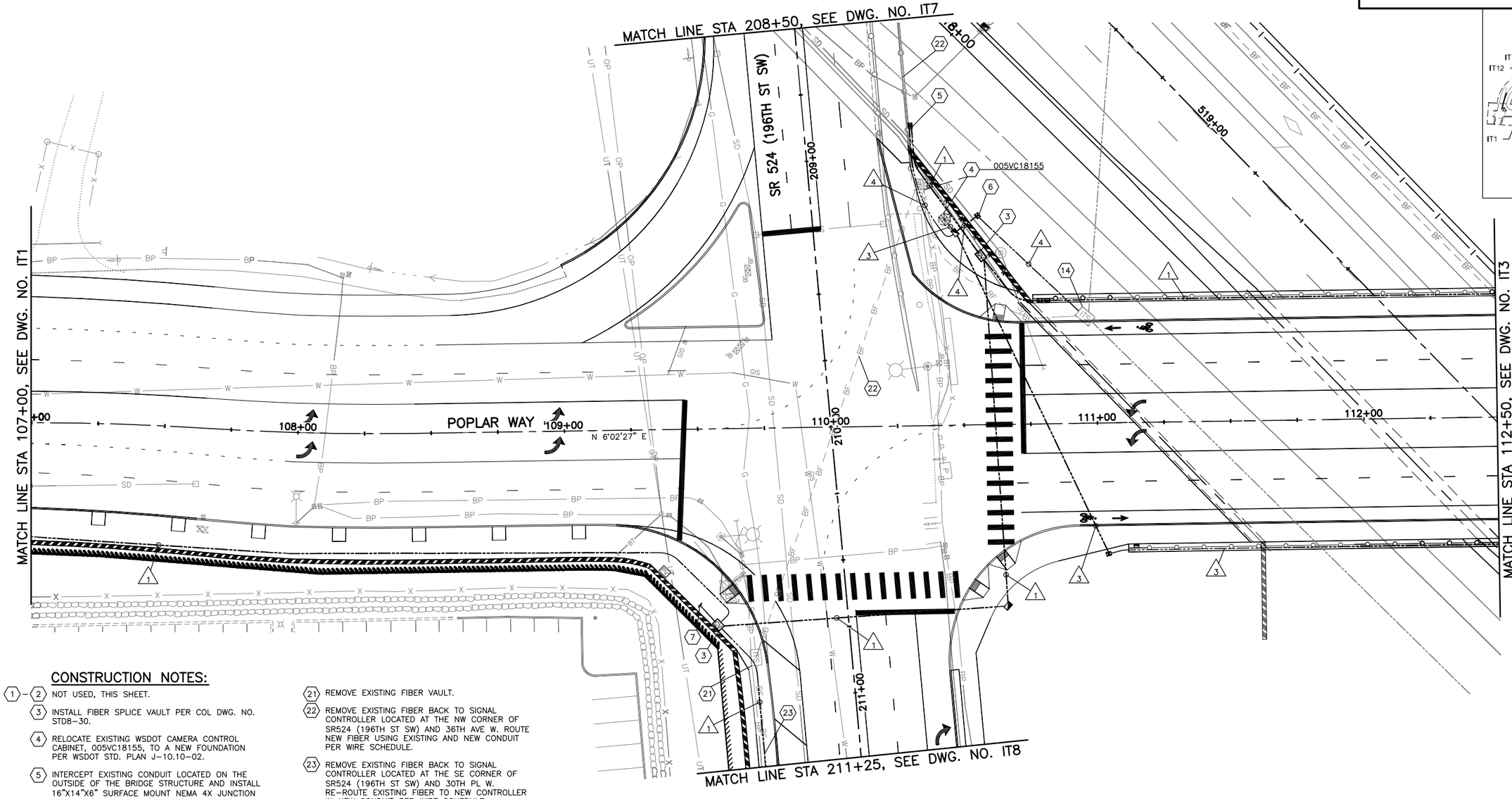

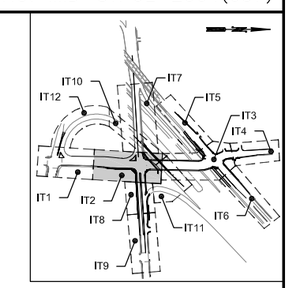

KEY MAP
NTS

CONSTRUCTION NOTES:

1 – 2 NOT USED, THIS SHEET.

3 INSTALL FIBER SPLICE VAULT PER COL DWG. NO. STD8-30.

4 RELOCATE EXISTING WSDOT CAMERA CONTROL CABINET, 005VC18155, TO A NEW FOUNDATION PER WSDOT STD. PLAN J-10.10-02.

5 INTERCEPT EXISTING CONDUIT LOCATED ON THE OUTSIDE OF THE BRIDGE STRUCTURE AND INSTALL 16"X14"X6" SURFACE MOUNT NEMA 4X JUNCTION BOX. SEE DETAILS ON ITDX.

6 INSTALL CONDUIT UNDER RETAINING WALL AND UP THROUGH WALL BACKFILL.

7 ROUTE CONDUIT INTO SIGNAL CONTROLLER CABINET. SEE SIGNAL SHEETS.

8 – 13 NOT USED, THIS SHEET.

14 INSTALL CONDUIT INTO EXISTING VAULT.

15 – 20 NOT USED, THIS SHEET.

21 REMOVE EXISTING FIBER VAULT.

22 REMOVE EXISTING FIBER BACK TO SIGNAL CONTROLLER LOCATED AT THE NW CORNER OF SR524 (196TH ST SW) AND 36TH AVE W. ROUTE NEW FIBER USING EXISTING AND NEW CONDUIT PER WIRE SCHEDULE.

23 REMOVE EXISTING FIBER BACK TO SIGNAL CONTROLLER LOCATED AT THE SE CORNER OF SR524 (196TH ST SW) AND 30TH PL W. RE-ROUTE EXISTING FIBER TO NEW CONTROLLER IN NEW CONDUIT PER WIRE SCHEDULE.

24 – 28 NOT USED, THIS SHEET.

GENERAL NOTES:

1. SEE DRAWING IT1 FOR WIRE SCHEDULE.

SCALE
20 0 20 40
FEET

60% REVIEW
CHECK PRINT
NOT FOR CONSTRUCTION

No.	Date	Revision	By	Appr.

Perteet
425-252-7700 I 1-800-615-9900
2707 Colby Avenue, Suite 900
Everett, Washington 98201

LYNNWOOD WASHINGTON

CARL J. EINFELD, STATE OF WASHINGTON, 24043, REGISTERED PROFESSIONAL ENGINEER

Drawn By MJS	Date 11/2014	SCALE
Designed By MAM	11/2014	Horiz 1"=20'
Checked By CJE	11/2014	Vert
Approved By PGD	11/2014	Project Number 20100156

CITY OF LYNNWOOD

POPLAR WAY EXTENSION BRIDGE
STA 107+00 TO STA 112+50
ITS PLAN

Drawing No. IT2

Sheet No. X of Total

Nov 06, 2014 - 3:42pm mikes X:\Lynnwood, City of\Projects\20100156 - Poplar Way Extension Bridge\CADD\Plan Sheets\20100156 IT.dwg Layout Name:IT2

SEC. 15, T. 27 N., R. 4 E., W.M.

FEDERAL AID NO. IMD-STPUL-2004(037)

CONSTRUCTION NOTES:

1 – 2 NOT USED, THIS SHEET.

3 INSTALL FIBER SPLICE VAULT PER COL DWG. NO. STD8-30.

4 – 6 NOT USED, THIS SHEET.

7 ROUTE CONDUIT INTO SIGNAL CONTROLLER CABINET. SEE SIGNAL SHEETS.

8 INSTALL POLE TOP MOUNTED COLOR CAMERA SYSTEM AND 50' CAMER POLE ON BRIDGE RAIL PER WASDOT STD. PLAN J-29.15-00 AND DETAILS ON ITDX. SEE BRIDGE PLANS FOR FOUNDATION DETAILS.

9 – 15 NOT USED, THIS SHEET.

16 ROUTE CONDUIT INTO JUNCTION BOX INSTALLED PER SIGNAL PLANS. RUN CAMERA CABLE BACK TO SIGNAL CONTROLLER USING SIGNAL CONDUITS. SEE SIGNAL PLANS.

17 – 24 NOT USED, THIS SHEET.

25 REMOVE EXISTING FIBER FROM EXISTING SIGNAL CONTROLLER AT NW CORNER OF ALDERWOOD MALL BLVD AND 33RD AVE W TO UTILITY POLE AT STA 121+10 RT (APPROX.).

26 – 28 NOT USED, THIS SHEET.

GENERAL NOTES:

1. SEE DRAWING IT1 FOR WIRE SCHEDULE.

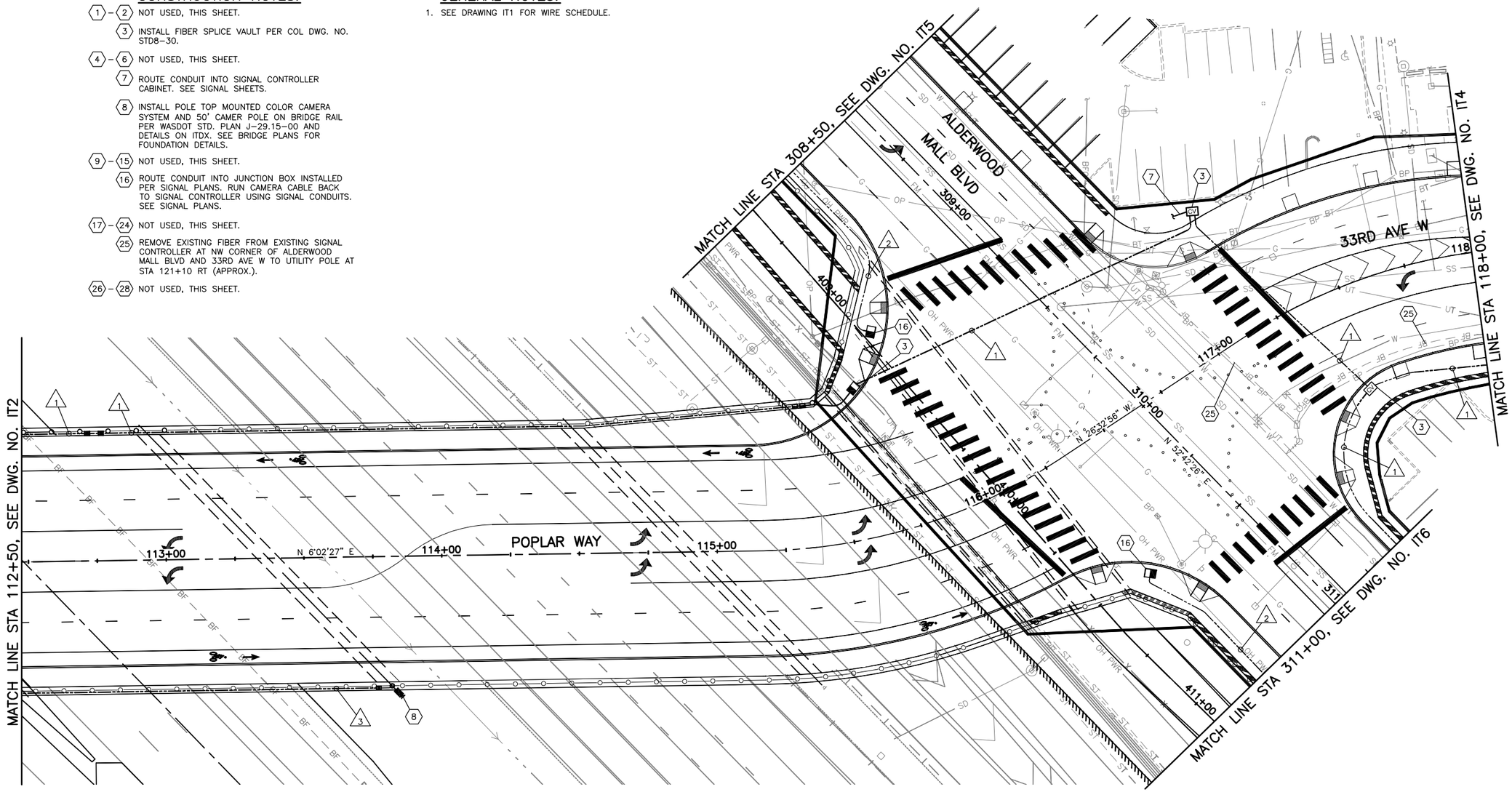

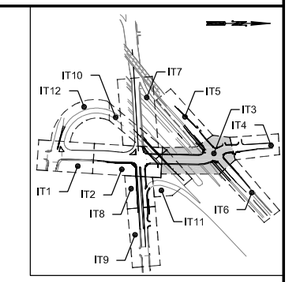

KEY MAP
NTS

SCALE
20 0 20 40
FEET

60% REVIEW
CHECK PRINT
NOT FOR CONSTRUCTION

No.	Date	Revision	By	Appr.

Perteet
425-252-7700 I 1-800-615-9900
2707 Colby Avenue, Suite 900
Everett, Washington 98201

LYNNWOOD WASHINGTON

CARL J. EINFELD, STATE OF WASHINGTON, 24043, REGISTERED PROFESSIONAL ENGINEER

Drawn By MJS	Date 11/2014	SCALE
Designed By MAM	11/2014	Horiz 1"=20'
Checked By CJE	11/2014	Vert
Approved By PGD	11/2014	Project Number 20100156

CITY OF LYNNWOOD

POPLAR WAY EXTENSION BRIDGE
STA 112+50 TO STA 118+00
ITS PLAN

Drawing No. IT3

Sheet No. X of Total

Nov 06, 2014 - 3:42pm mikes X:\Lynnwood, City of\Projects\20100156 - Poplar Way Extension Bridge\CADD\Plan Sheets\20100156 IT.dwg Layout Name:IT3

SEC. 15, T. 27 N., R. 4 E., W.M.

FEDERAL AID NO. IMD-STPUL-2004(037)

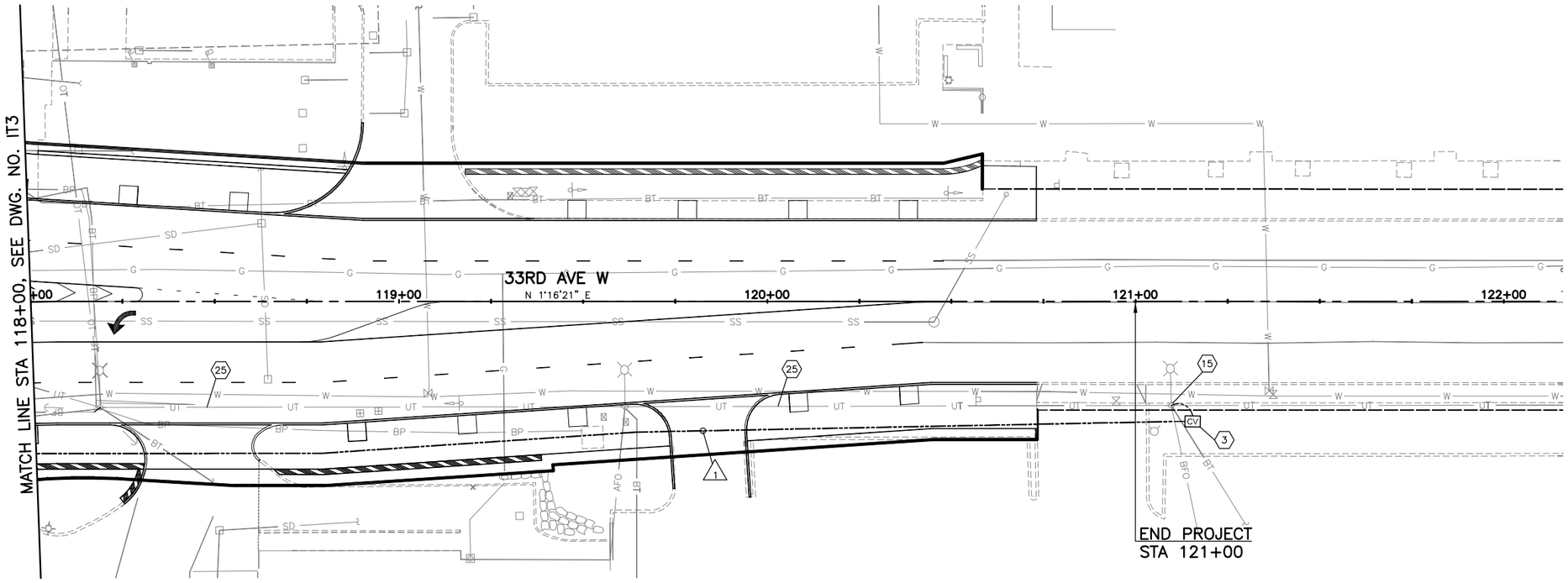

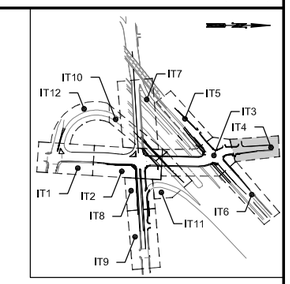

KEY MAP
NTS

CONSTRUCTION NOTES:

(1) – (2) NOT USED, THIS SHEET.

(3) INSTALL FIBER SPLICE VAULT PER COL DWG. NO. STD8-30.

(4) – (14) NOT USED, THIS SHEET.

(15) INSTALL CONDUIT RISER AND WEATHER HEAD ON EXISTING WOOD UTILITY POLE PER WSDOT STD PLAN J-15.10-01. ROUTE EXISTING AERIAL FIBER DOWN TO NEW SPLICE VAULT. SPLICE FIBER PER DETAILS ON ITD_.

(16) – (24) NOT USED, THIS SHEET.

(25) REMOVE EXISTING FIBER FROM EXISTING SIGNAL CONTROLLER AT SW CORNER OF ALDERWOOD MALL BLVD AND 33RD AVE W TO UTILITY POLE AT STA 121+10 RT (APPROX.).

(26) – (28) NOT USED, THIS SHEET.

GENERAL NOTES:

1. SEE DRAWING IT1 FOR WIRE SCHEDULE.

SCALE
20 0 20 40
FEET

60% REVIEW
CHECK PRINT
NOT FOR CONSTRUCTION

No.	Date	Revision	By	Appr.

Perteet
425-252-7700 I 1-800-615-9900
2707 Colby Avenue, Suite 900
Everett, Washington 98201

LYNNWOOD WASHINGTON

CARL J. EINFELD, STATE OF WASHINGTON, 24043, REGISTERED PROFESSIONAL ENGINEER

Drawn By MJS	Date 11/2014	
Designed By MAM	11/2014	
Checked By CJE	11/2014	
Approved By PGD	11/2014	

SCALE
Horiz 1"=20'
Vert
Project Number 20100156

CITY OF LYNNWOOD
POPLAR WAY EXTENSION BRIDGE
STA 118+00 TO E.O.P.
ITS PLAN

Drawing No. IT4
Sheet No. X of Total

Nov 06, 2014 - 3:42pm mikes X:\Lynnwood, City of\Projects\20100156 - Poplar Way Extension Bridge\CADD\Plan Sheets\20100156 IT.dwg Layout Name:IT4

SEC. 22, T. 27 N., R. 4 E., W.M.

FEDERAL AID NO. IMD-STPUL-2004(037)

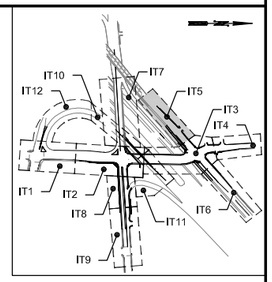

KEY MAP
NTS

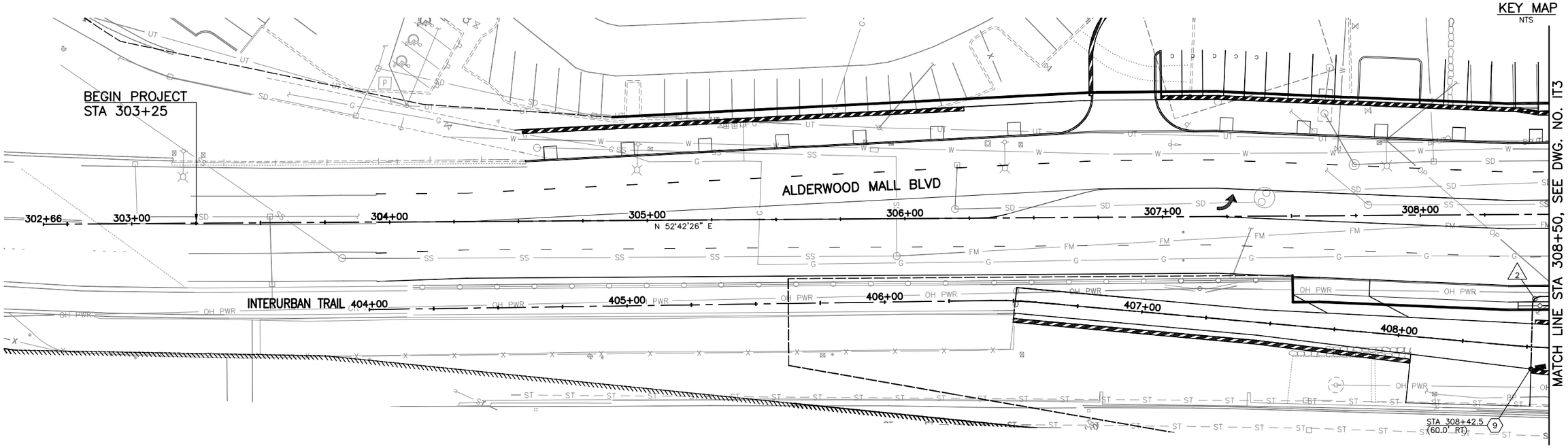

CONSTRUCTION NOTES:

(1) – (8) NOT USED, THIS SHEET.

(9) INSTALL SECURITY CAMERA AND FLASHING BEACON TYPE 1 POLE ON TOP OF RETAINING WALL PER WSDOT STD. PLAN J-21.16-01 AND DETAILS ON DWG. NO. ITD_. SEE WALL PLANS FOR FOUNDATION DETAILS.

(10) – (28) NOT USED, THIS SHEET.

GENERAL NOTES:

1. SEE DRAWING IT1 FOR WIRE SCHEDULE.

SCALE
20 0 20 40
FEET

60% REVIEW
CHECK PRINT
NOT FOR CONSTRUCTION

No.	Date	Revision	By	Appr.

Perteet
425-252-7700 I 1-800-615-9900
2707 Colby Avenue, Suite 900
Everett, Washington 98201

LYNNWOOD WASHINGTON

CARL J. EINFELD, STATE OF WASHINGTON, 24043, REGISTERED PROFESSIONAL ENGINEER

Drawn By MJS	Date 11/2014	SCALE Horiz 1"=20' Vert
Designed By MAM	11/2014	
Checked By CJE	11/2014	Project Number 20100156
Approved By PGD	11/2014	

CITY OF LYNNWOOD
POPLAR WAY EXTENSION BRIDGE
B.O.P. TO STA 308+50
ITS PLAN

Drawing No. IT5
Sheet No. X of Total

Nov 06, 2014 - 3:42pm mikes X:\Lynnwood, City of\Projects\20100156 - Poplar Way Extension Bridge\CADD\Plan Sheets\20100156 IT.dwg Layout Name:IT5

SEC. 15, T. 27 N., R. 4 E., W.M.

FEDERAL AID NO. IMD-STPUL-2004(037)

CONSTRUCTION NOTES:

1 – 8 NOT USED, THIS SHEET.

9 INSTALL SECURITY CAMERA AND FLASHING BEACON TYPE 1 POLE ON TOP OF RETAINING WALL PER WSDOT STD. PLAN J-21.16-01 AND DETAILS ON DWG. NO. ITD_. SEE WALL PLANS FOR FOUNDATION DETAILS.

10 – 16 NOT USED, THIS SHEET.

17 INSTALL TYPE 2 JUNCTION BOX PER COL DWG. NO. STD8-4A AND COIL 100 FEET OF FIBER.

18 – 28 NOT USED, THIS SHEET.

GENERAL NOTES:

1. SEE DRAWING IT1 FOR WIRE SCHEDULE.

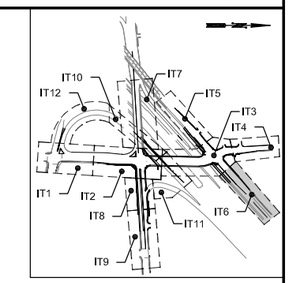

KEY MAP
NTS

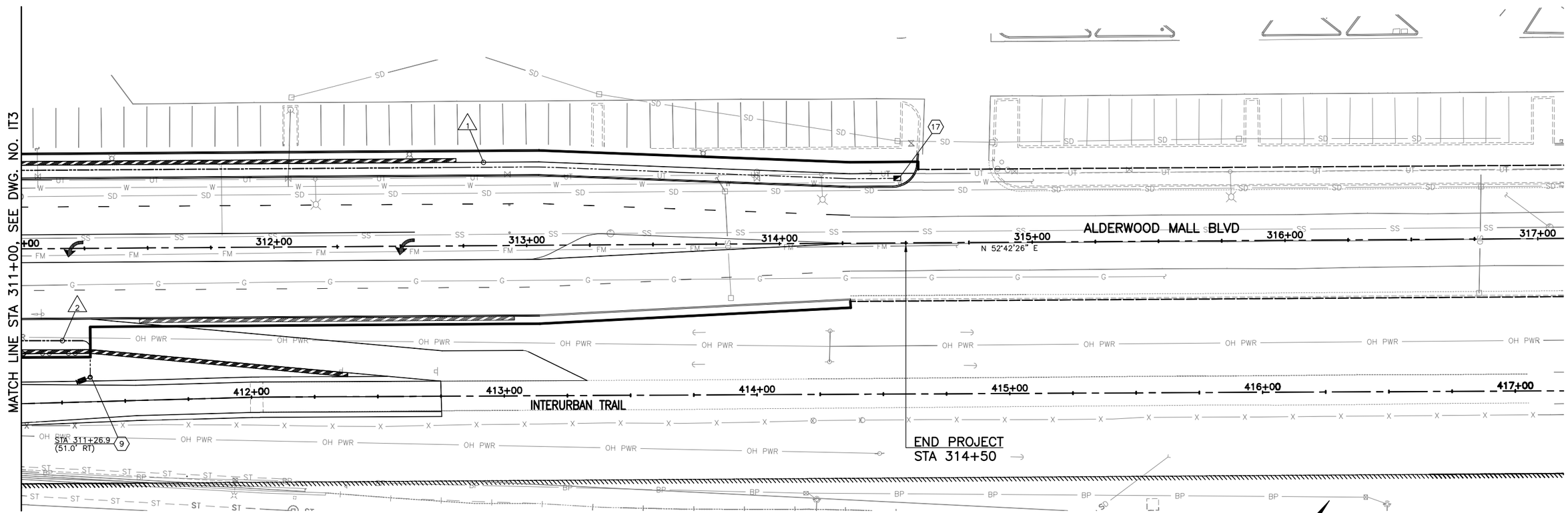

SCALE
20 0 20 40
FEET

60% REVIEW
CHECK PRINT
NOT FOR CONSTRUCTION

No.	Date	Revision	By	Appr.

Perteet
425-252-7700 I 1-800-615-9900
2707 Colby Avenue, Suite 900
Everett, Washington 98201

LYNNWOOD WASHINGTON

CARL J. EINFELD, STATE OF WASHINGTON, 24043, REGISTERED PROFESSIONAL ENGINEER

Drawn By MJS	Date 11/2014	SCALE Horiz 1"=20' Vert
Designed By MAM	11/2014	
Checked By CJE	11/2014	Project Number 20100156
Approved By PGD	11/2014	

CITY OF LYNNWOOD
POPLAR WAY EXTENSION BRIDGE
STA 311+00 TO E.O.P.
ITS PLAN

Drawing No. IT6
Sheet No. X of Total

Nov 06, 2014 - 3:42pm mikes X:\Lynnwood, City of\Projects\20100156 - Poplar Way Extension Bridge\CADD\Plan Sheets\20100156 IT.dwg Layout Name:IT6

SEC. 15 & 22, T. 27 N., R. 4 E., W.M.

FEDERAL AID NO. IMD-STPUL-2004(037)

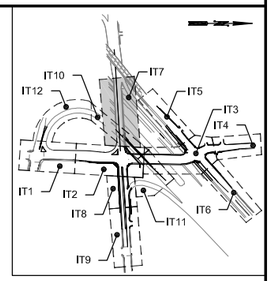

KEY MAP
NTS

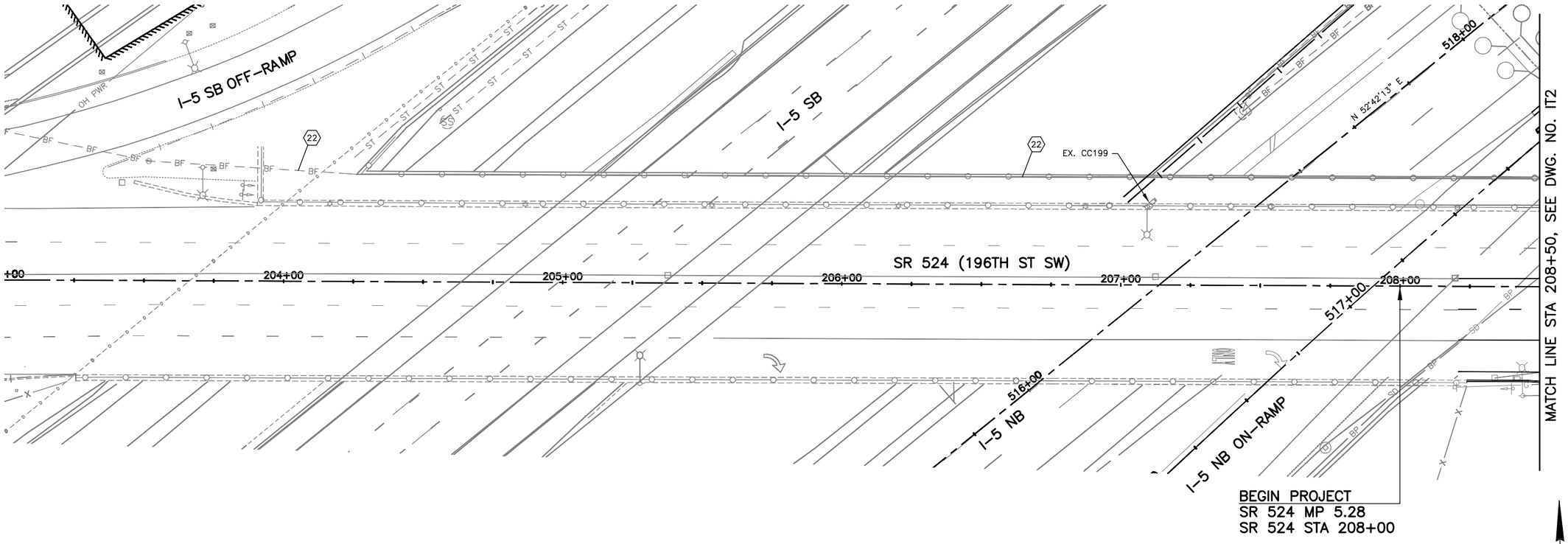

CONSTRUCTION NOTES:

(1) – (21) NOT USED, THIS SHEET.

(22) REMOVE EXISTING FIBER BACK TO SIGNAL CONTROLLER LOCATED AT THE NW CORNER OF SR524 (196TH ST SW) AND 33RD AVE W. ROUTE NEW FIBER USING EXISTING AND NEW CONDUIT PER WIRE SCHEDULE.

(23) – (28) NOT USED, THIS SHEET.

GENERAL NOTES:

1. SEE DRAWING IT1 FOR WIRE SCHEDULE.

SCALE
20 0 20 40
FEET

60% REVIEW
CHECK PRINT
NOT FOR CONSTRUCTION

No.	Date	Revision	By	Appr.

Perteet
425-252-7700 I 1-800-615-9900
2707 Colby Avenue, Suite 900
Everett, Washington 98201

LYNNWOOD WASHINGTON

CARL J. EINFELD, STATE OF WASHINGTON, 24043, REGISTERED PROFESSIONAL ENGINEER

Drawn By MJS	Date 11/2014	SCALE
Designed By MAM	11/2014	Horiz 1"=20'
Checked By CJE	11/2014	Vert
Approved By PGD	11/2014	Project Number 20100156

CITY OF LYNNWOOD

POPLAR WAY EXTENSION BRIDGE
B.O.P. TO STA 208+50
ITS PLAN

Drawing No. IT7

Sheet No. X of Total

Nov 06, 2014 - 3:42pm mikes X:\Lynnwood, City of\Projects\20100156 - Poplar Way Extension Bridge\CADD\Plan Sheets\20100156 IT.dwg Layout Name:IT7

SEC. 15 & 22, T. 27 N., R. 4 E., W.M.

FEDERAL AID NO. IMD-STPUL-2004(037)

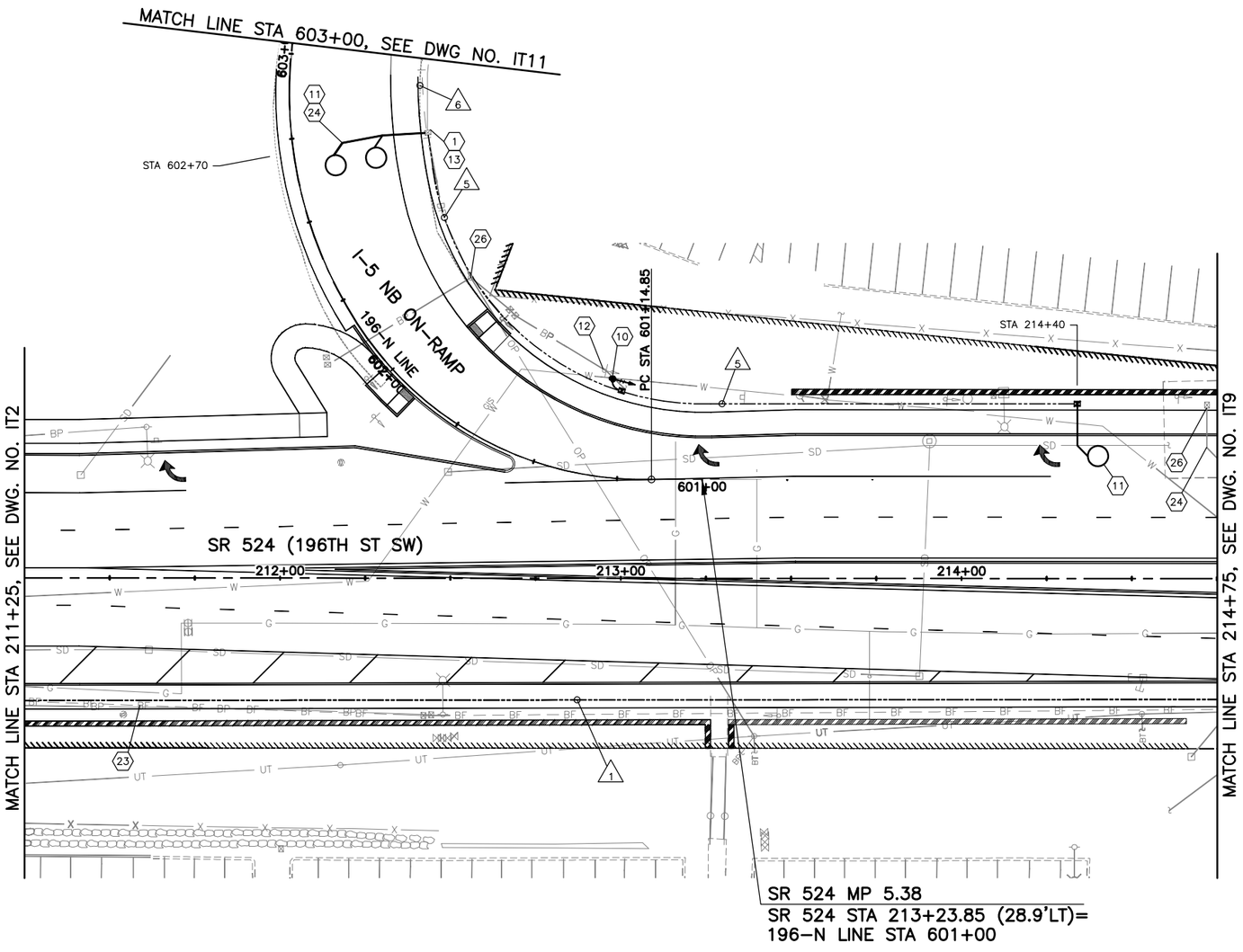

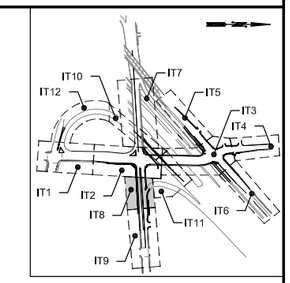

KEY MAP
NTS

GENERAL NOTES:

1. SEE DRAWING IT1 FOR WIRE SCHEDULE.

CONSTRUCTION NOTES:

(1) ROUTE CONDUIT INTO EXISTING JUNCTION BOX.

(2) – (9) NOT USED, THIS SHEET.

(10) CONSTRUCT FOUNDATION AND INSTALL SINGLE FLASHING BEACON TYPE 1 SIGNAL STANDARD PER WSDOT STD. PLAN J-21.16-01. INSTALL SIGN PER SIGNING PLAN.

(11) INSTALL TYPE 3 ADVANCE LOOP PER WSDOT STD. PLAN J-50.12-00.

(12) REMOVE EXISTING FLASHING BEACON, POLE, AND SIGN. REMOVE CONDUCTORS BACK TO JUNCTION BOX AT STA 602+70. ABANDON EXISTING CONDUIT.

(13) ROUTE LOOP LEAD-IN INTO EXISTING JUNCTION BOX. SPLICE CONDUCTORS PER WIRE SCHEDULE.

(14) – (22) NOT USED, THIS SHEET.

(23) REMOVE EXISTING FIBER BACK TO SIGNAL CONTROLLER LOCATED AT THE SW CORNER OF SR524 (196TH ST SW) AND 30TH PL W. ROUTE NEW FIBER USING EXISTING AND NEW CONDUIT PER WIRE SCHEDULE.

(24) ABANDON EXISTING LOOP.

(25) NOT USED, THIS SHEET.

(26) REMOVE EXISTING JUNCTION BOX AND CONDUCTORS BACK TO JUNCTION BOX AT STA 602+70. ABANDON EXISTING CONDUIT

(27) – (28) NOT USED THIS SHEET.

SCALE
20 0 20 40
FEET

60% REVIEW
CHECK PRINT
NOT FOR CONSTRUCTION

No.	Date	Revision	By	Appr.

Perteet
425-252-7700 I 1-800-615-9900
2707 Colby Avenue, Suite 900
Everett, Washington 98201

LYNNWOOD WASHINGTON

CARL J. EINFELD, STATE OF WASHINGTON, 24043, REGISTERED PROFESSIONAL ENGINEER

Drawn By MJS	Date 11/2014	
Designed By MAM	11/2014	
Checked By CJE	11/2014	
Approved By PGD	11/2014	

SCALE
Horiz 1"=20'
Vert
Project Number 20100156

CITY OF LYNNWOOD
POPLAR WAY EXTENSION BRIDGE
STA 211+25 TO STA 214+75
ITS PLAN

Drawing No. IT8
Sheet No. X of Total

Nov 06, 2014 - 3:43pm mikes X:\Lynnwood, City of\Projects\20100156 - Poplar Way Extension Bridge\CADD\Plan Sheets\20100156 IT.dwg Layout Name:IT8

SEC. 15 & 22, T. 27 N., R. 4 E., W.M.

FEDERAL AID NO. IMD-STPUL-2004(037)

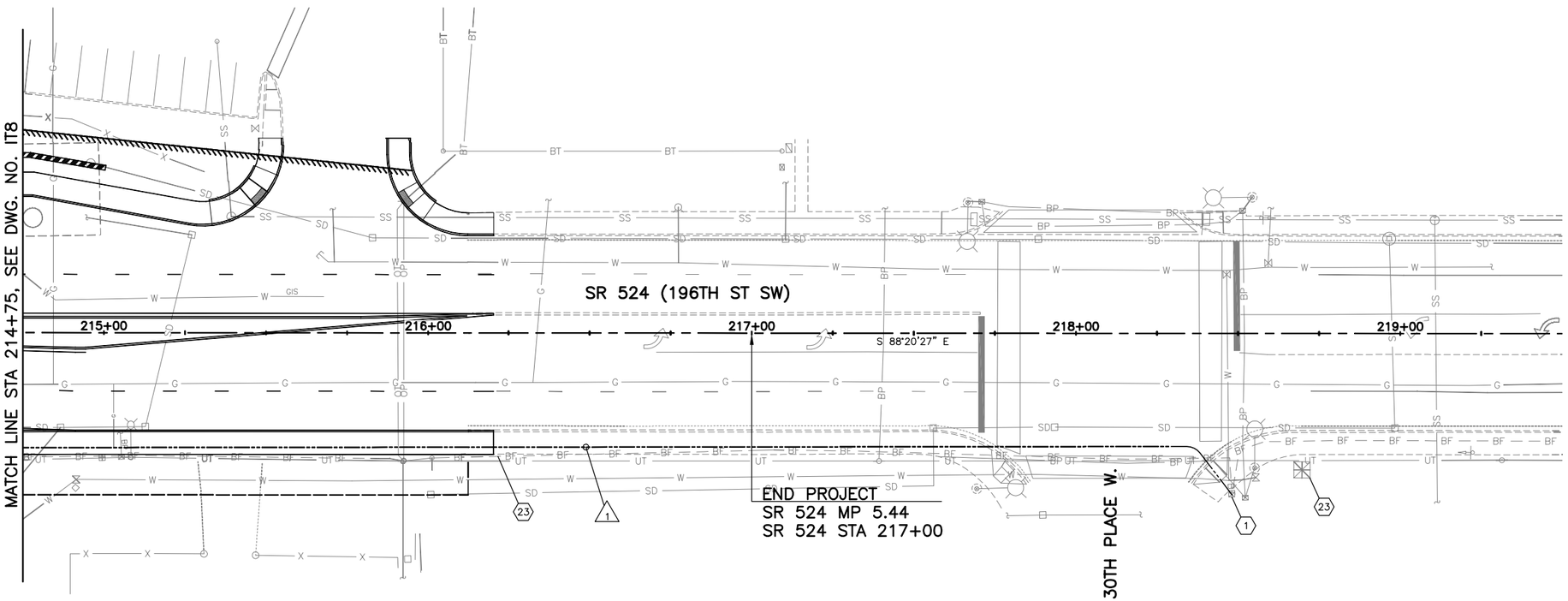

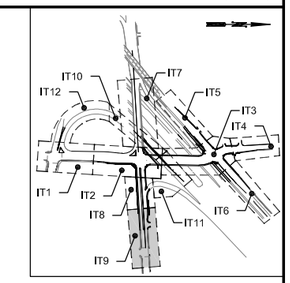

KEY MAP
NTS

CONSTRUCTION NOTES:

1. ROUTE CONDUIT INTO EXISTING JUNCTION BOX.
2. ROUTE SIGNAL INTERCONNECT FIBER INTO EXISTING SIGNAL CONTROLLER USING EXISTING CONDUIT.
3 – 22. NOT USED, THIS SHEET.
23. REMOVE EXISTING FIBER BACK TO SIGNAL CONTROLLER LOCATED AT THE SE CORNER OF SR524 (196TH ST SW) AND 30TH PL W. ROUTE NEW FIBER USING EXISTING AND NEW CONDUIT PER WIRE SCHEDULE.
24 – 28. NOT USED, THIS SHEET.

GENERAL NOTES:

1. SEE DRAWING IT1 FOR WIRE SCHEDULE.

SCALE
20 0 20 40
FEET

60% REVIEW
CHECK PRINT
NOT FOR CONSTRUCTION

No.	Date	Revision	By	Appr.

Perteet
425-252-7700 I 1-800-615-9900
2707 Colby Avenue, Suite 900
Everett, Washington 98201

LYNNWOOD WASHINGTON

CARL J. EINFELD, STATE OF WASHINGTON, 24043, REGISTERED PROFESSIONAL ENGINEER

Drawn By MJS	Date 11/2014	SCALE Horiz 1"=20' Vert
Designed By MAM	11/2014	
Checked By CJE	11/2014	Project Number 20100156
Approved By PGD	11/2014	

CITY OF LYNNWOOD
POPLAR WAY EXTENSION BRIDGE
STA 214+75 TO E.O.P.
ITS PLAN

Drawing No. IT9
Sheet No. X of Total

Nov 06, 2014 - 3:43pm mikes X:\Lynnwood, City of\Projects\20100156 - Poplar Way Extension Bridge\CADD\Plan Sheets\20100156 IT.dwg Layout Name:IT9

SEC. 15 & 22, T. 27 N., R. 4 E., W.M.

FEDERAL AID NO. IMD-STPUL-2004(037)

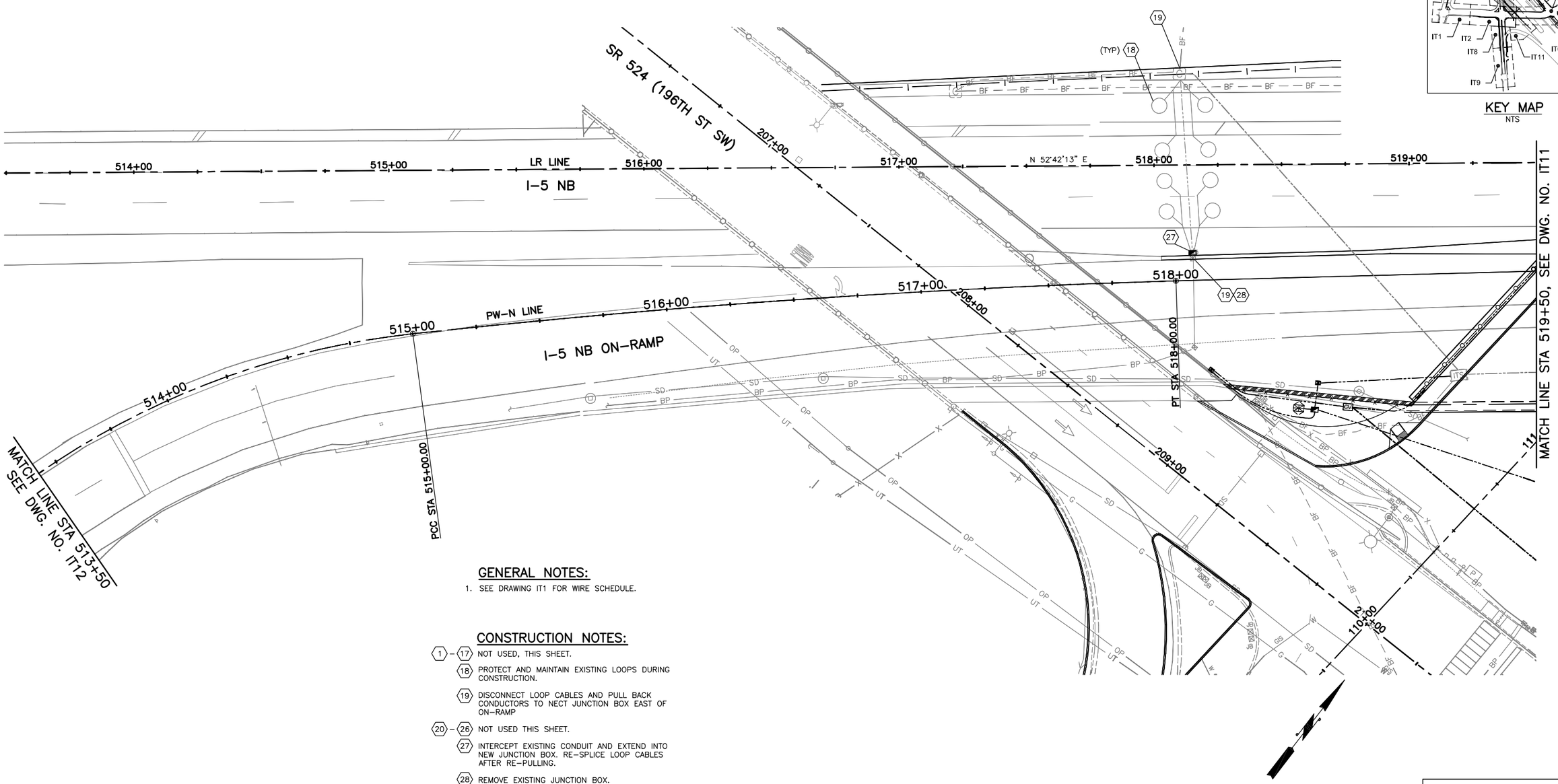

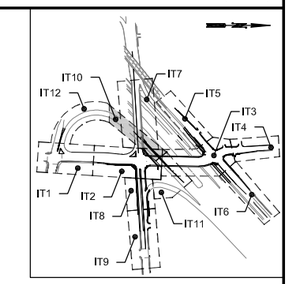

KEY MAP
NTS

GENERAL NOTES:

1. SEE DRAWING IT1 FOR WIRE SCHEDULE.

CONSTRUCTION NOTES:

1 – 17 NOT USED, THIS SHEET.

18 PROTECT AND MAINTAIN EXISTING LOOPS DURING CONSTRUCTION.

19 DISCONNECT LOOP CABLES AND PULL BACK CONDUCTORS TO NECT JUNCTION BOX EAST OF ON-RAMP

20 – 26 NOT USED THIS SHEET.

27 INTERCEPT EXISTING CONDUIT AND EXTEND INTO NEW JUNCTION BOX. RE-SPLICE LOOP CABLES AFTER RE-PULLING.

28 REMOVE EXISTING JUNCTION BOX.

SCALE
20 0 20 40
FEET

60% REVIEW
CHECK PRINT
NOT FOR CONSTRUCTION

No.	Date	Revision	By	Appr.

Perteet
425-252-7700 I 1-800-615-9900
2707 Colby Avenue, Suite 900
Everett, Washington 98201

LYNNWOOD WASHINGTON

CARL J. EINFELD, STATE OF WASHINGTON, 24043, REGISTERED PROFESSIONAL ENGINEER

Drawn By MJS	Date 11/2014	SCALE Horiz 1"=20'
Designed By MAM	11/2014	Vert
Checked By CJE	11/2014	Project Number 20100156
Approved By PGD	11/2014	

CITY OF LYNNWOOD
POPLAR WAY EXTENSION BRIDGE
STA 513+50 TO STA 519+50
ITS PLAN

Drawing No. IT10
Sheet No. X of Total

Nov 06, 2014 - 3:43pm mikes X:\Lynnwood, City of\Projects\20100156 - Poplar Way Extension Bridge\CADD\Plan Sheets\20100156 IT.dwg Layout Name:IT10

SEC. 15, T. 27 N., R. 4 E., W.M.

FEDERAL AID NO. IMD-STPUL-2004(037)

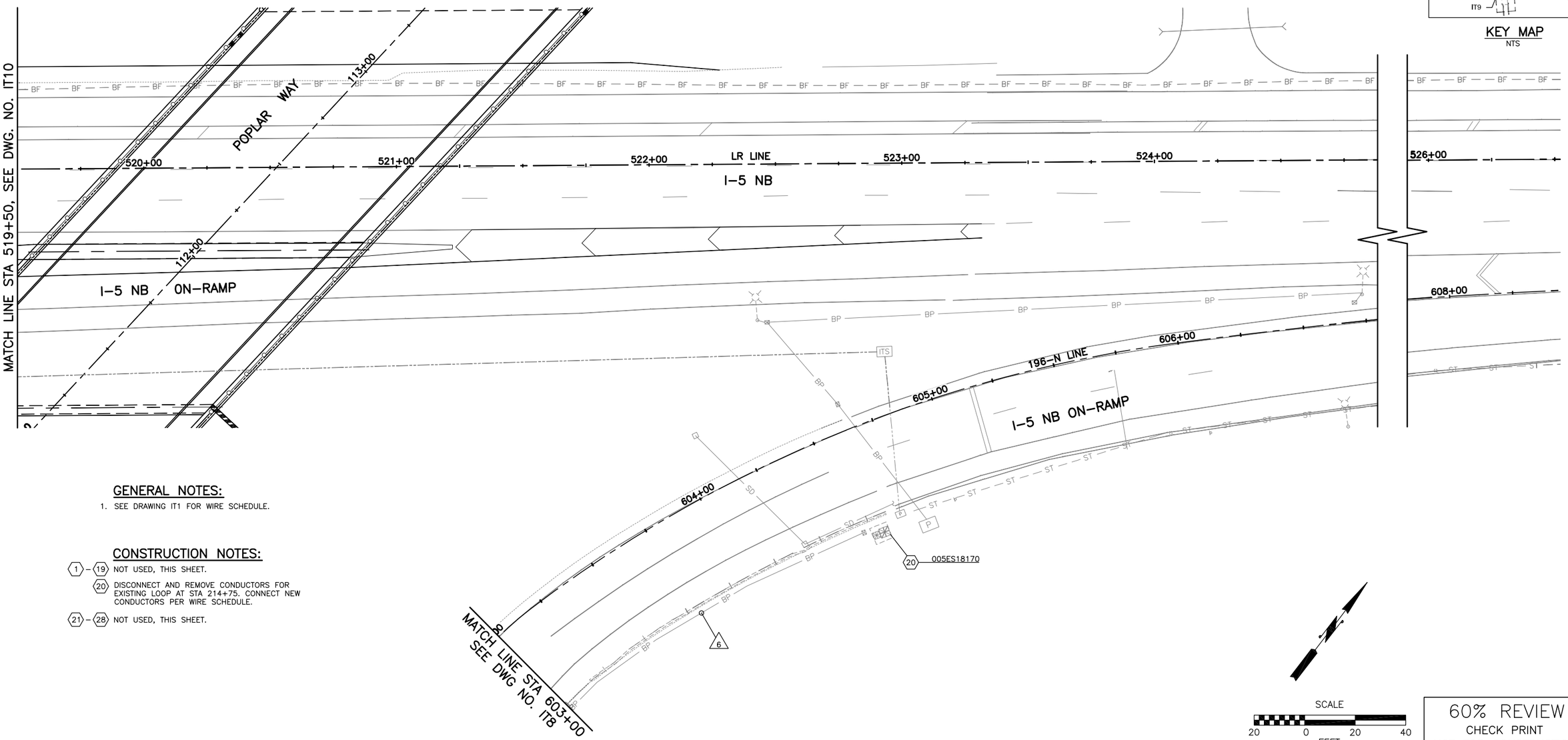

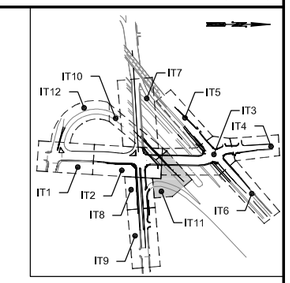

KEY MAP
NTS

GENERAL NOTES:

1. SEE DRAWING IT1 FOR WIRE SCHEDULE.

CONSTRUCTION NOTES:

(1) - (19) NOT USED, THIS SHEET.

(20) DISCONNECT AND REMOVE CONDUCTORS FOR EXISTING LOOP AT STA 214+75. CONNECT NEW CONDUCTORS PER WIRE SCHEDULE.

(21) - (28) NOT USED, THIS SHEET.

SCALE
20 0 20 40
FEET

60% REVIEW
CHECK PRINT
NOT FOR CONSTRUCTION

No.	Date	Revision	By	Appr.

Perteet
425-252-7700 I 1-800-615-9900
2707 Colby Avenue, Suite 900
Everett, Washington 98201

LYNNWOOD WASHINGTON

CARL J. EINFELD, STATE OF WASHINGTON, 24043, REGISTERED PROFESSIONAL ENGINEER

Drawn By MJS	Date 11/2014	SCALE
Designed By MAM	11/2014	Horiz 1"=20'
Checked By CJE	11/2014	Vert
Approved By PGD	11/2014	Project Number 20100156

CITY OF LYNNWOOD
POPLAR WAY EXTENSION BRIDGE
STA 519+50 TO E.O.P.
ITS PLAN

Drawing No. IT11
Sheet No. X of Total

Nov 06, 2014 - 3:43pm mikes X:\Lynnwood, City of\Projects\20100156 - Poplar Way Extension Bridge\CADD\Plan Sheets\20100156 IT.dwg Layout Name:IT11

SEC. 22, T. 27 N., R. 4 E., W.M.

FEDERAL AID NO. IMD-STPUL-2004(037)

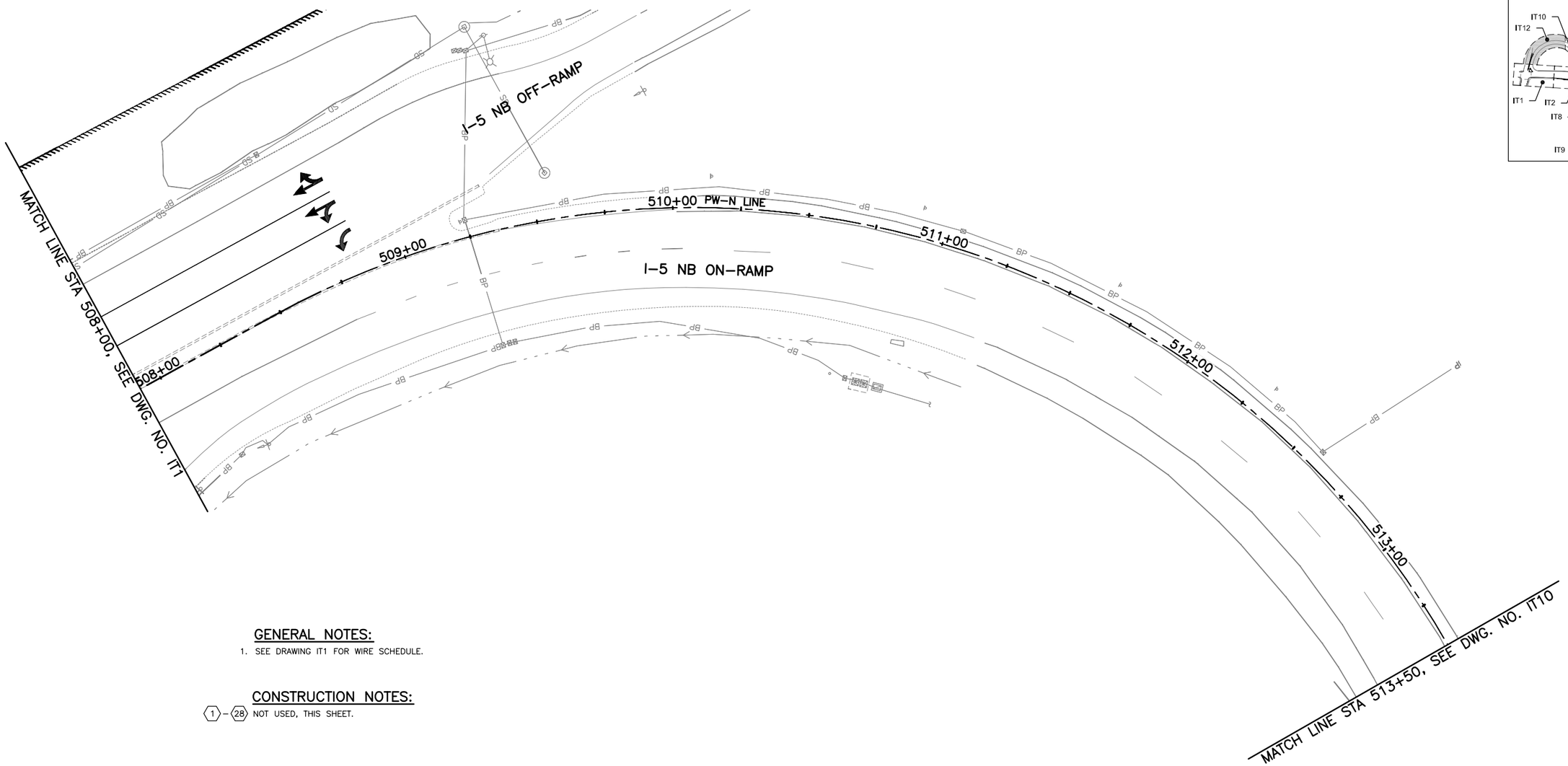

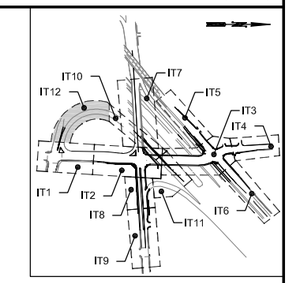

KEY MAP
NTS

GENERAL NOTES:

1. SEE DRAWING IT1 FOR WIRE SCHEDULE.

CONSTRUCTION NOTES:

(1) – (28) NOT USED, THIS SHEET.

SCALE
20 0 20 40
FEET

60% REVIEW
CHECK PRINT
NOT FOR CONSTRUCTION

No.	Date	Revision	By	Appr.

Perteet
425-252-7700 I 1-800-615-9900
2707 Colby Avenue, Suite 900
Everett, Washington 98201

LYNNWOOD WASHINGTON

CARL J. EINFELD, STATE OF WASHINGTON, 24043, REGISTERED PROFESSIONAL ENGINEER

Drawn By MJS	Date 11/2014	
Designed By MAM	11/2014	
Checked By CJE	11/2014	
Approved By PGD	11/2014	

SCALE
Horiz 1"=20'
Vert
Project Number 20100156

CITY OF LYNNWOOD
POPLAR WAY EXTENSION BRIDGE
STA 508+00 TO STA 513+50
ITS PLAN

Drawing No. IT12
Sheet No. X of Total

Nov 06, 2014 - 3:43pm mikes X:\Lynnwood, City of\Projects\20100156 - Poplar Way Extension Bridge\CADD\Plan Sheets\20100156 IT.dwg Layout Name:IT12

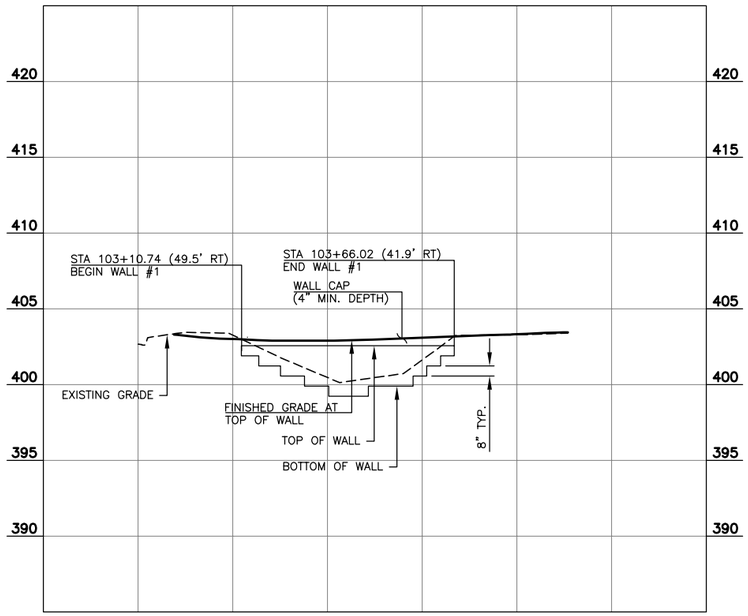

WALL 1 – POPLAR WAY

SCALE: HORZ: 1"=20'
VERT: 1"=5'

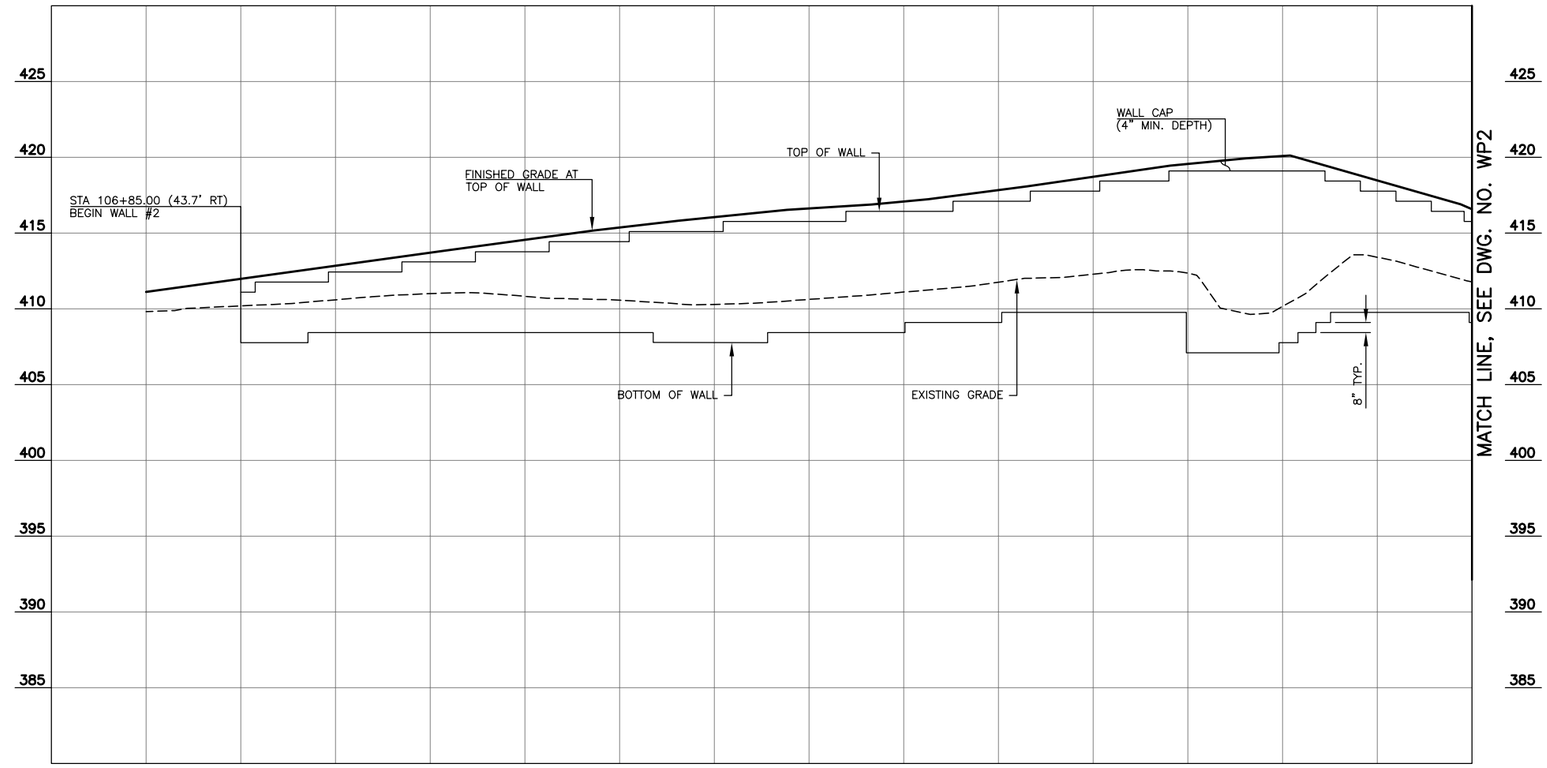

WALL 2/3 – POPLAR WAY AND 196TH ST SW

SCALE: HORZ: 1"=20'
VERT: 1"=5'

NOTE TO REVIEWER:

WALL PLANS, ELEVATIONS AND DETAILS AND WALL CAP DETAILS TO BE PROVIDED AT 90% DESIGN SUBMITTAL.

CALL 2 BUSINESS DAYS BEFORE YOU DIG
1 800 424-5555
UTILITIES UNDERGROUND LOCATION CENTER

60% REVIEW
CHECK PRINT
NOT FOR CONSTRUCTION

No.	Date	Revision	By	Appr.

Perteet
425-252-7700 I 1-800-615-9900
2707 Colby Avenue, Suite 900
Everett, Washington 98201

LYNNWOOD WASHINGTON

CARL J. EINFELD, STATE OF WASHINGTON, 24043, REGISTERED PROFESSIONAL ENGINEER

Drawn By MJS	Date 11/2014	SCALE	
Designed By JRW	11/2014	Horiz N/A	
Checked By CJE	11/2014	Vert N/A	
Approved By PGD	11/2014	Project Number 20100156	

CITY OF LYNNWOOD
POPLAR WAY EXTENSION BRIDGE
WALL PROFILES

Drawing No. WP1
Sheet No. X / X of Total

Nov 06, 2014 - 3:44pm mikes X:\Lynnwood, City of\Projects\20100156 - Poplar Way Extension Bridge\CADD\Plan Sheets\20100156 WP.dwg Layout Name: WP1

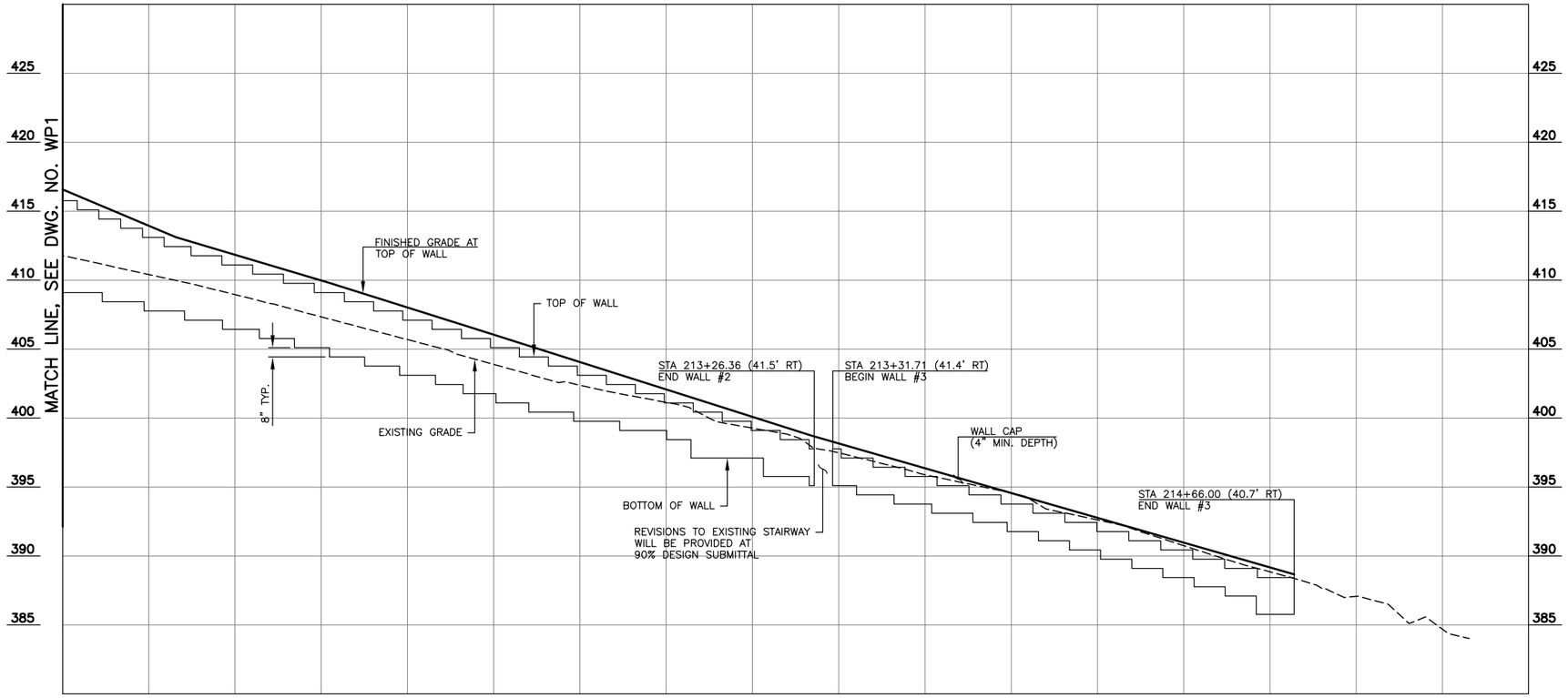

WALL 2/3 – POPLAR WAY AND 196TH ST SW

SCALE: HORZ: 1"=20'
VERT: 1"=5'

NOTE TO REVIEWER:

WALL PLANS, ELEVATIONS AND DETAILS AND WALL CAP DETAILS TO BE PROVIDED AT 90% DESIGN SUBMITTAL.

CALL 2 BUSINESS DAYS BEFORE YOU DIG
1 800 424-5555
UTILITIES UNDERGROUND LOCATION CENTER

60% REVIEW
CHECK PRINT
NOT FOR CONSTRUCTION

No.	Date	Revision	By	Appr.

Perteet
425-252-7700 I 1-800-615-9900
2707 Colby Avenue, Suite 900
Everett, Washington 98201

LYNNWOOD WASHINGTON

CARL J. EINFELD, STATE OF WASHINGTON, REGISTERED PROFESSIONAL ENGINEER, No. 24043

Drawn By MJS	Date 11/2014	SCALE Horiz N/A	CITY OF LYNNWOOD
Designed By JRW	11/2014	Vert N/A	POPLAR WAY EXTENSION BRIDGE
Checked By CJE	11/2014	Project Number 20100156	WALL PROFILES
Approved By PGD	11/2014		

Drawing No. WP2
Sheet No. X / X of Total

Nov 06, 2014 - 3:45pm mikes X:\Lynnwood, City of\Projects\20100156 - Poplar Way Extension Bridge\CADD\Plan Sheets\20100156 WP.dwg Layout Name: WP2

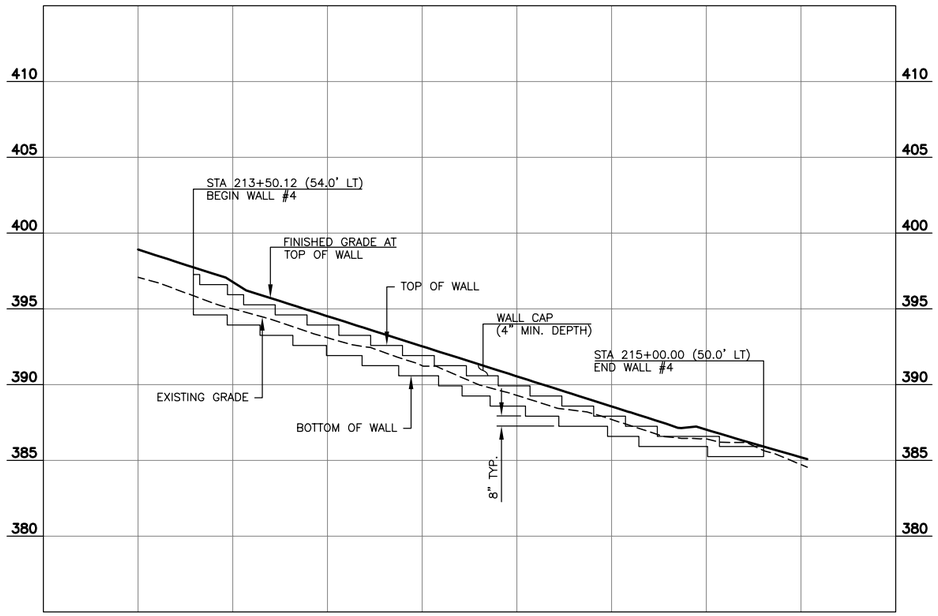

WALL 4 – 196TH ST SW

SCALE: HORZ: 1"=20'
VERT: 1"=5'

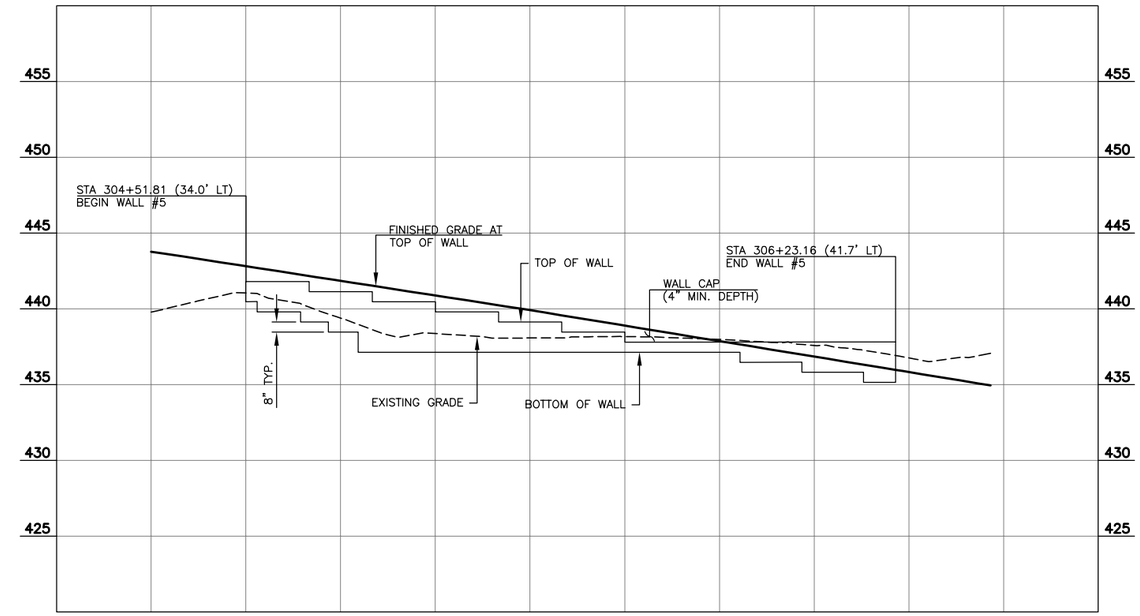

WALL 5 – ALDERWOOD MALL BLVD

SCALE: HORZ: 1"=20'
VERT: 1"=5'

NOTE TO REVIEWER:

WALL PLANS, ELEVATIONS AND DETAILS AND WALL CAP DETAILS TO BE PROVIDED AT 90% DESIGN SUBMITTAL.

CALL 2 BUSINESS DAYS BEFORE YOU DIG
1 800 424-5555
UTILITIES UNDERGROUND LOCATION CENTER

60% REVIEW
CHECK PRINT
NOT FOR CONSTRUCTION

No.	Date	Revision	By	Appr.

Perteet
425-252-7700 I 1-800-615-9900
2707 Colby Avenue, Suite 900
Everett, Washington 98201

LYNNWOOD WASHINGTON

CARL J. EINFELD, STATE OF WASHINGTON, 24043, REGISTERED PROFESSIONAL ENGINEER

Drawn By MJS	Date 11/2014	SCALE	
Designed By JRW	11/2014	Horiz N/A	
Checked By CJE	11/2014	Vert N/A	
Approved By PGD	11/2014	Project Number 20100156	

CITY OF LYNNWOOD
POPLAR WAY EXTENSION BRIDGE
WALL PROFILES

Drawing No. WP3
Sheet No. X / X of Total

Nov 06, 2014 - 3:45pm mikes X:\Lynnwood, City of\Projects\20100156 - Poplar Way Extension Bridge\CADD\Plan Sheets\20100156 WP.dwg Layout Name: WP3

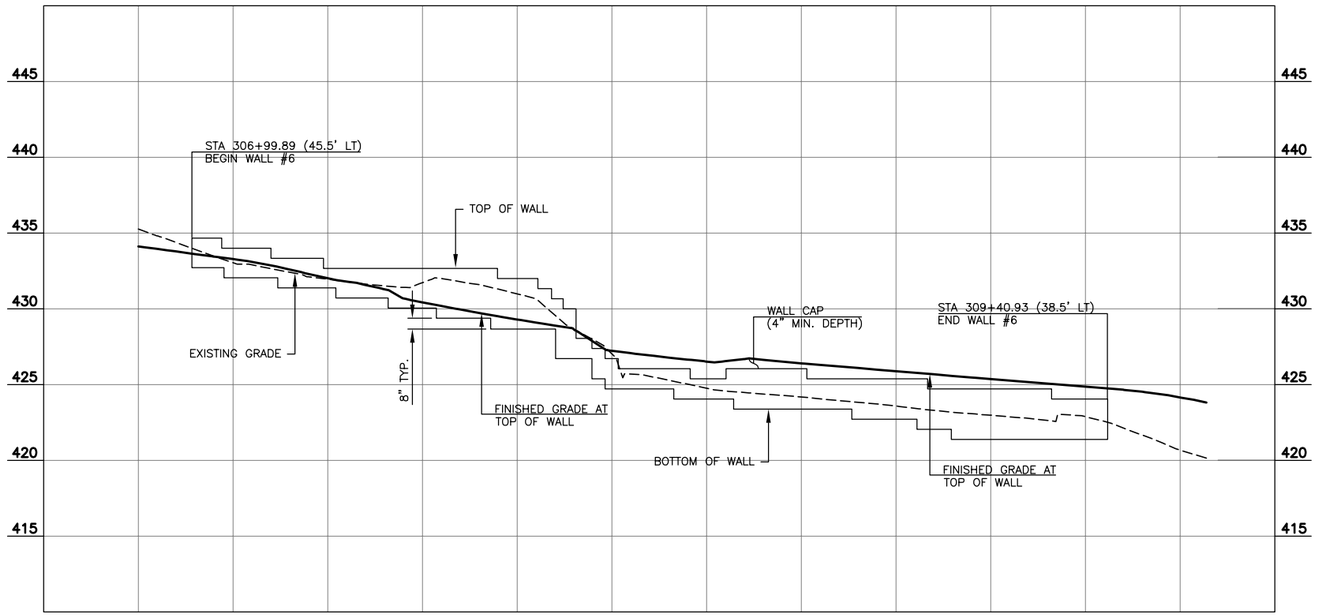

WALL 6 – ALDERWOOD MALL BLVD

SCALE: HORZ: 1"=20'
VERT: 1"=5'

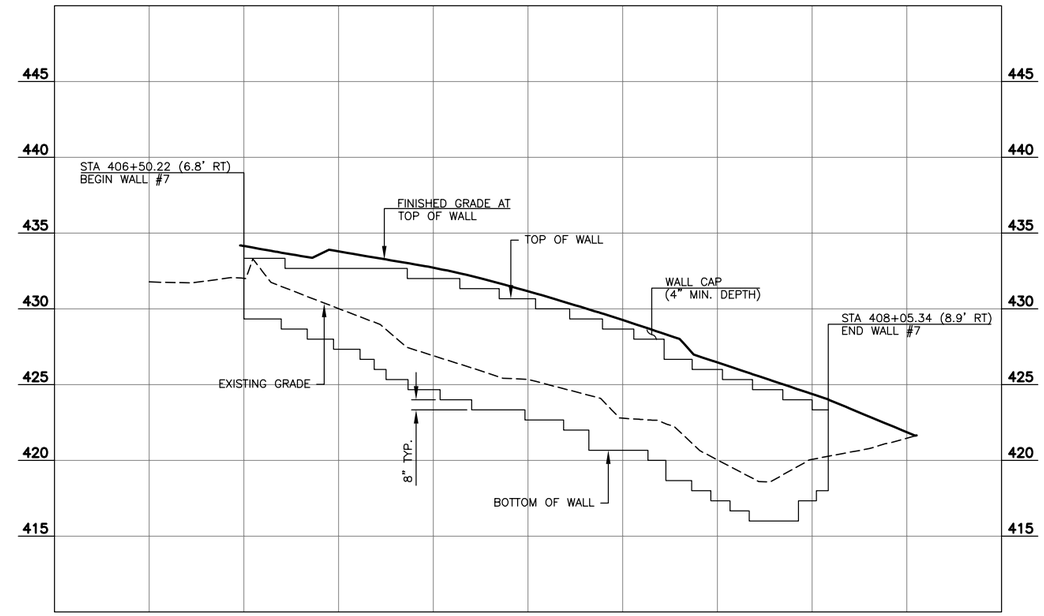

WALL 7 – INTERURBAN TRAIL

SCALE: HORZ: 1"=20'
VERT: 1"=5'

NOTE TO REVIEWER:

WALL PLANS, ELEVATIONS AND DETAILS AND WALL CAP DETAILS TO BE PROVIDED AT 90% DESIGN SUBMITTAL.

CALL 2 BUSINESS DAYS BEFORE YOU DIG
1 800 424-5555
UTILITIES UNDERGROUND LOCATION CENTER

60% REVIEW
CHECK PRINT
NOT FOR CONSTRUCTION

No.	Date	Revision	By	Appr.

Perteet
425-252-7700 I 1-800-615-9900
2707 Colby Avenue, Suite 900
Everett, Washington 98201

LYNNWOOD WASHINGTON

CARL J. EINFELD, STATE OF WASHINGTON, 24043, REGISTERED PROFESSIONAL ENGINEER

Drawn By MJS	Date 11/2014	SCALE
Designed By JRW	11/2014	Horiz N/A
Checked By CJE	11/2014	Vert N/A
Approved By PGD	11/2014	Project Number 20100156

CITY OF LYNNWOOD
POPLAR WAY EXTENSION BRIDGE
WALL PROFILES

Drawing No. WP4
Sheet No. X of X Total

Nov 06, 2014 - 3:46pm mikes X:\Lynnwood, City of\Projects\20100156 - Poplar Way Extension Bridge\CADD\Plan Sheets\20100156 WP.dwg Layout Name: WP4

FEDERAL AID NO. IMD-STPUL-2004(037)

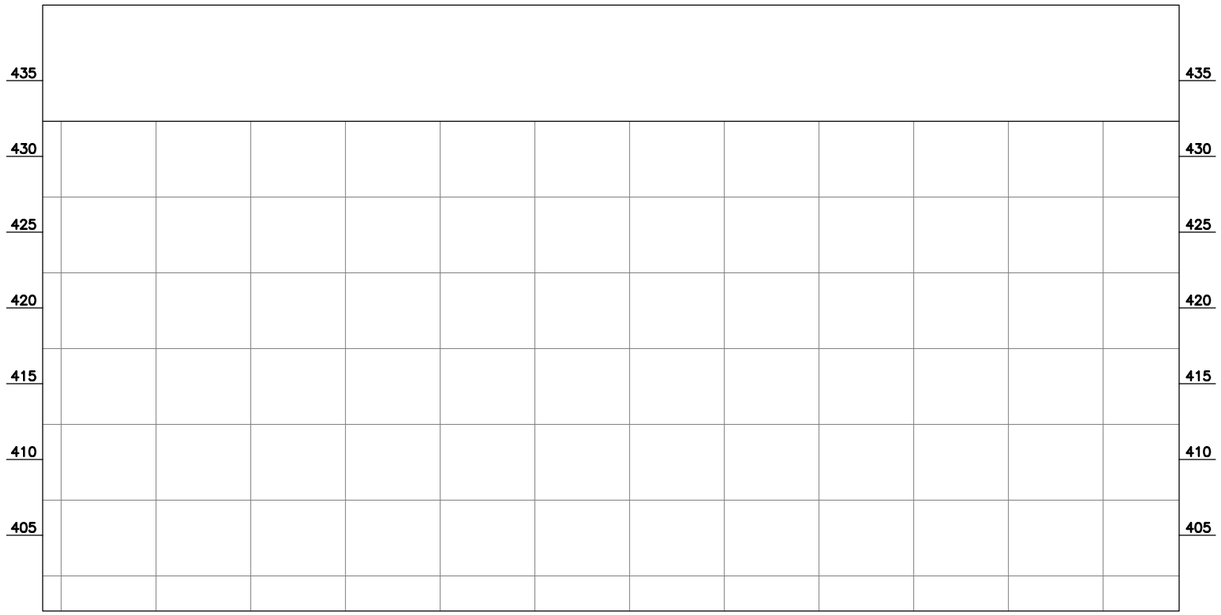

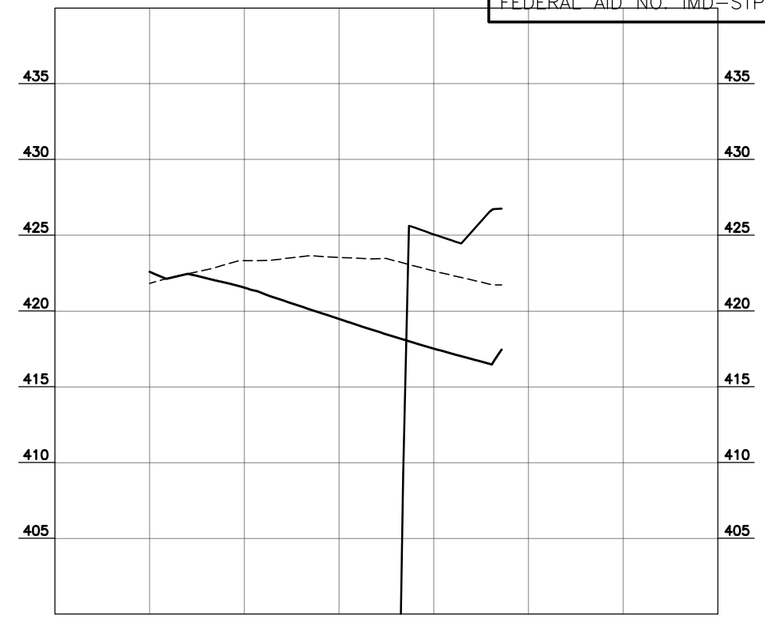

WALL 8 – INTERURBAN TRAIL

SCALE: HORZ: 1"=20'
VERT: 1"=5'

WALL 9 – INTERURBAN TRAIL

SCALE: HORZ: 1"=20'
VERT: 1"=5'

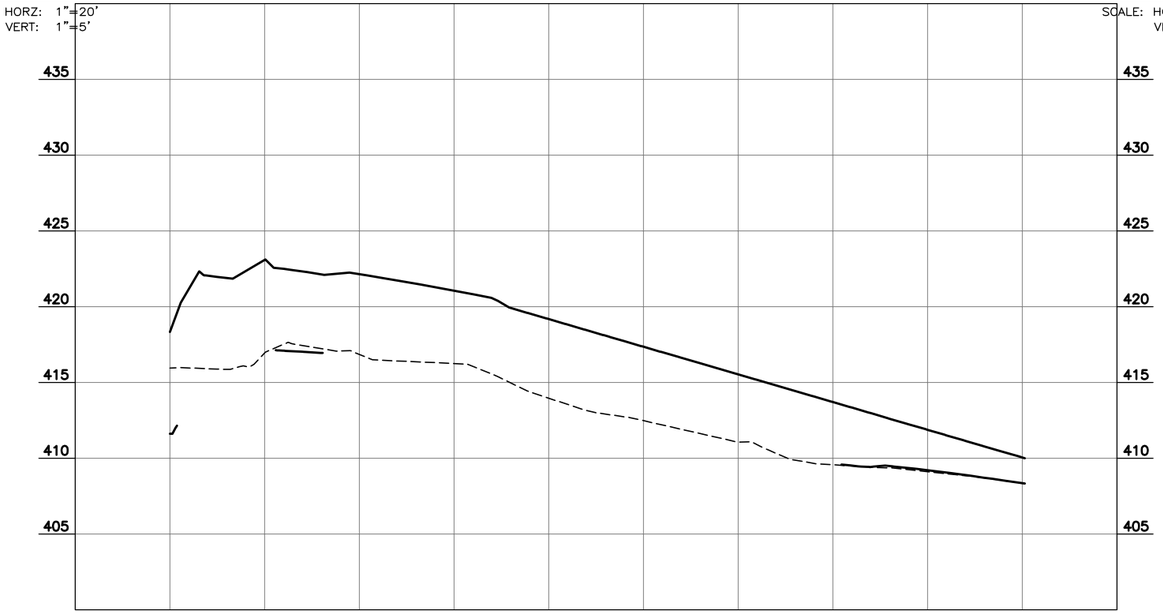

WALL 11 – ALDERWOOD MALL BLVD

SCALE: HORZ: 1"=20'
VERT: 1"=5'

CALL 2 BUSINESS DAYS BEFORE YOU DIG
1 800 424-5555
UTILITIES UNDERGROUND LOCATION CENTER

60% REVIEW
CHECK PRINT
NOT FOR CONSTRUCTION

No.	Date	Revision	By	Appr.

Perteet
425-252-7700 I 1-800-615-9900
2707 Colby Avenue, Suite 900
Everett, Washington 98201

LYNNWOOD WASHINGTON

CARL J. EINFELD, STATE OF WASHINGTON, 24043, REGISTERED PROFESSIONAL ENGINEER

Drawn By MJS	Date 11/2014	
Designed By JRW	11/2014	
Checked By CJE	11/2014	
Approved By PGD	11/2014	

SCALE
Horiz N/A
Vert N/A
Project Number 20100156

CITY OF LYNNWOOD
POPLAR WAY EXTENSION BRIDGE
WALL PROFILES

Drawing No. WP5
Sheet No. X / X of Total

Nov 06, 2014 - 3:47pm mikes X:\Lynnwood, City of\Projects\20100156 - Poplar Way Extension Bridge\CADD\Plan Sheets\20100156 WP.dwg Layout Name: DO NOT PRINT

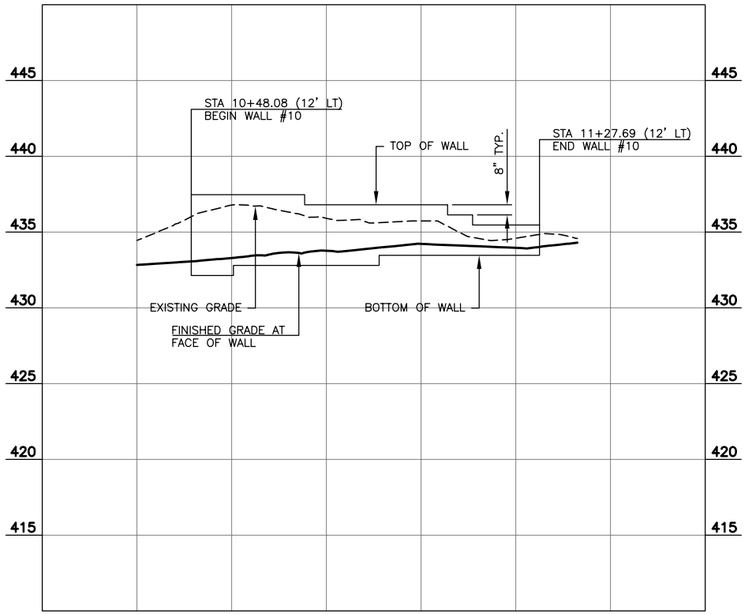

WALL 10 – DRIVEWAY

SCALE: HORZ: 1"=20'
VERT: 1"=5'

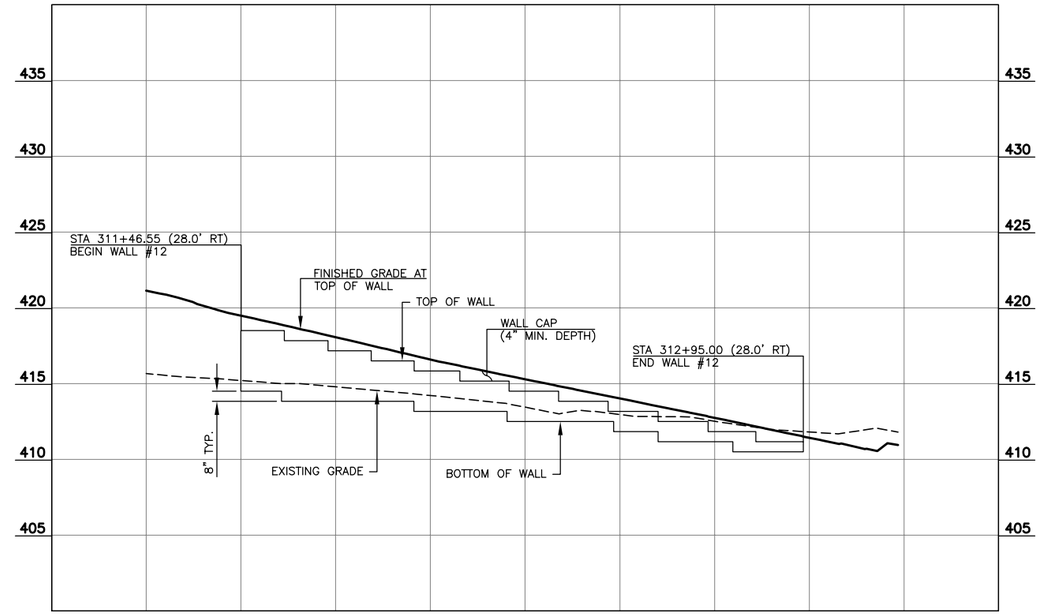

WALL 12 – ALDERWOOD MALL BLVD

SCALE: HORZ: 1"=20'
VERT: 1"=5'

NOTE TO REVIEWER:

WALL PLANS, ELEVATIONS AND DETAILS AND WALL CAP DETAILS TO BE PROVIDED AT 90% DESIGN SUBMITTAL.

CALL 2 BUSINESS DAYS BEFORE YOU DIG
1 800 424-5555
UTILITIES UNDERGROUND LOCATION CENTER

60% REVIEW
CHECK PRINT
NOT FOR CONSTRUCTION

No.	Date	Revision	By	Appr.

Perteet
425-252-7700 I 1-800-615-9900
2707 Colby Avenue, Suite 900
Everett, Washington 98201

LYNNWOOD WASHINGTON

CARL J. EINFELD, STATE OF WASHINGTON, 24043, REGISTERED PROFESSIONAL ENGINEER

Drawn By MJS	Date 11/2014	SCALE	
Designed By JRW	11/2014	Horiz N/A	
Checked By CJE	11/2014	Vert N/A	
Approved By PGD	11/2014	Project Number 20100156	

CITY OF LYNNWOOD
POPLAR WAY EXTENSION BRIDGE
WALL PROFILES

Drawing No. WP5
Sheet No. X / X of Total

Nov 06, 2014 - 3:48pm mikes X:\Lynnwood, City of\Projects\20100156 - Poplar Way Extension Bridge\CADD\Plan Sheets\20100156 WP.dwg Layout Name: WP5

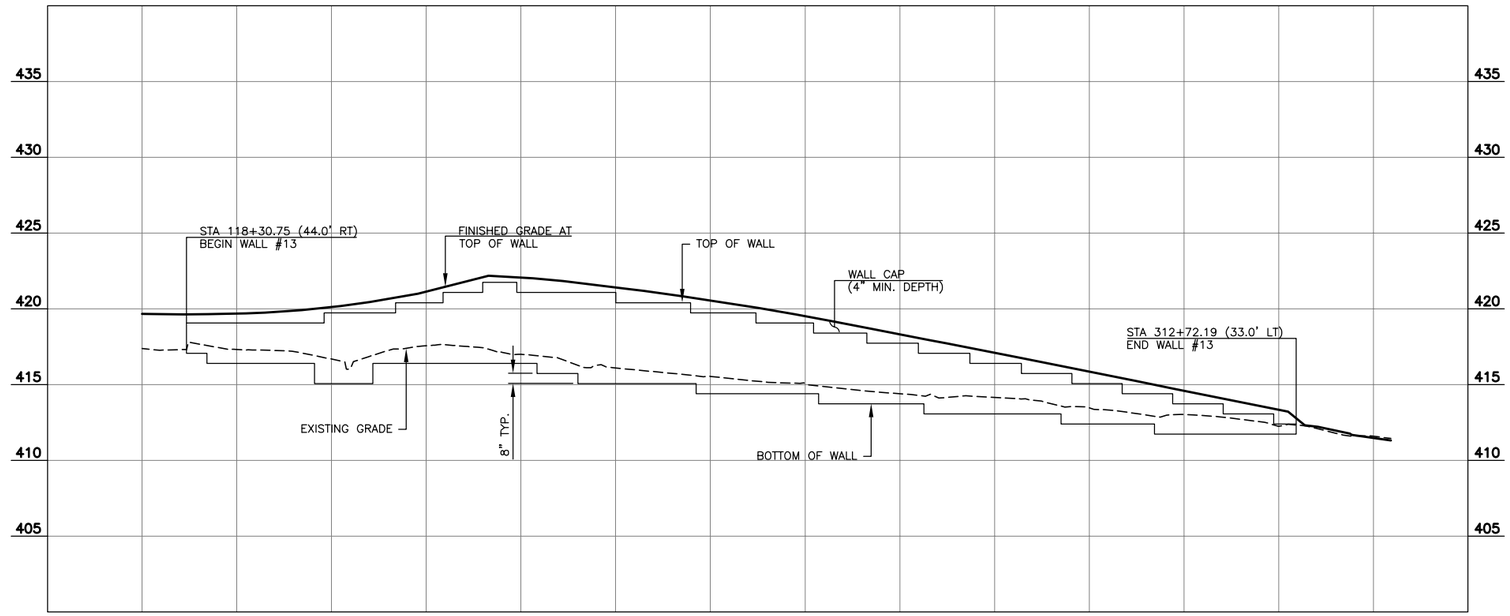

WALL 13 – ALDERWOOD MALL BLVD

SCALE: HORZ: 1"=20'
VERT: 1"=5'

NOTE TO REVIEWER:

WALL PLANS, ELEVATIONS AND DETAILS AND WALL CAP DETAILS TO BE PROVIDED AT 90% DESIGN SUBMITTAL.

CALL 2 BUSINESS DAYS BEFORE YOU DIG
1 800 424-5555
UTILITIES UNDERGROUND LOCATION CENTER

60% REVIEW
CHECK PRINT
NOT FOR CONSTRUCTION

No.	Date	Revision	By	Appr.

Perteet
425-252-7700 I 1-800-615-9900
2707 Colby Avenue, Suite 900
Everett, Washington 98201

LYNNWOOD WASHINGTON

CARL J. EINFELD, STATE OF WASHINGTON, 24043, REGISTERED PROFESSIONAL ENGINEER

Drawn By MJS	Date 11/2014	SCALE
Designed By JRW	11/2014	Horiz N/A
Checked By CJE	11/2014	Vert N/A
Approved By PGD	11/2014	Project Number 20100156

CITY OF LYNNWOOD
POPLAR WAY EXTENSION BRIDGE
WALL PROFILES

Drawing No. WP6
Sheet No. X / X of Total

Nov 06, 2014 - 3:48pm mikes X:\Lynnwood, City of\Projects\20100156 - Poplar Way Extension Bridge\CADD\Plan Sheets\20100156 WP.dwg Layout Name: WP6

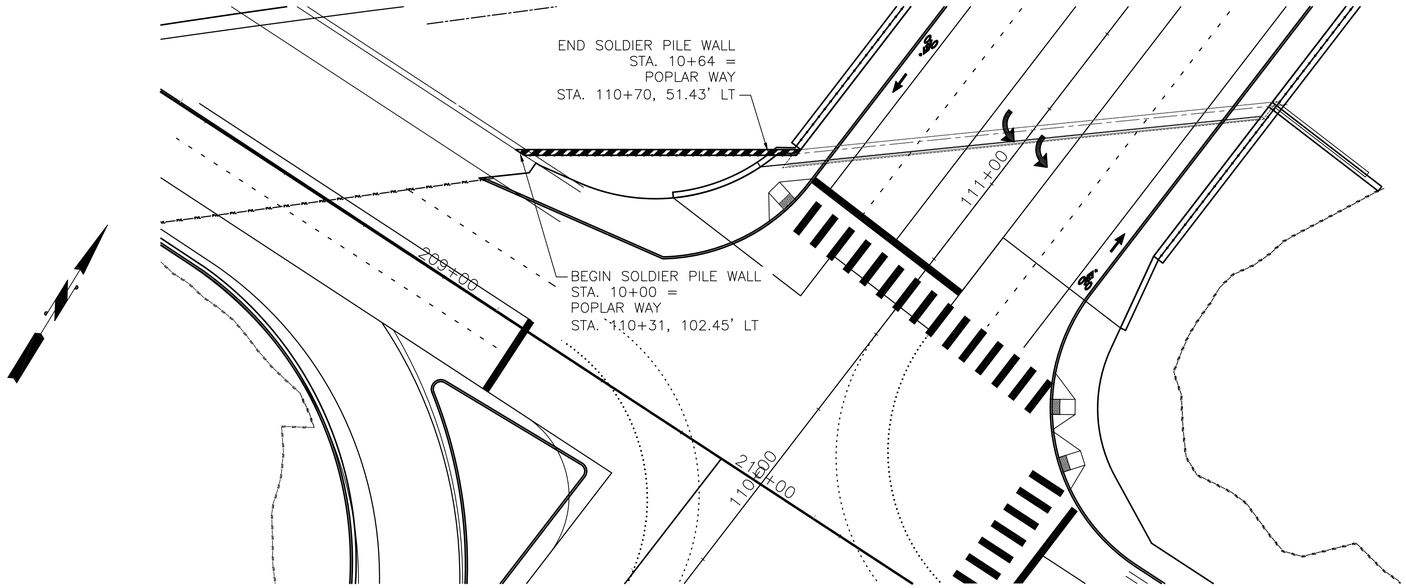

WALL LAYOUT PLAN

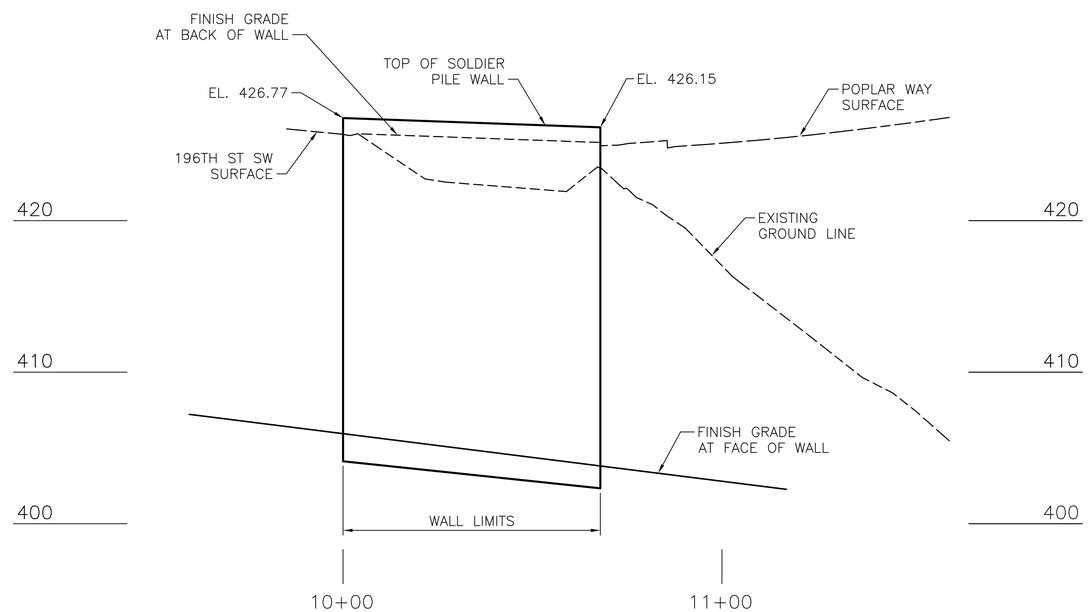

WALL ELEVATION

(REFLECTED ELEVATION)

60% REVIEW

NOT FOR CONSTRUCTION

No.	Date	Revision	By	Appr.

HNTB
HNTB Corporation
600 108th Avenue NE
Suite 900
Bellevue, WA 98004
(425) 455-3555

Perteet Inc.
425-252-7700 I 1-800-615-9900
2707 Colby Avenue, Suite 900
Everett, Washington 98201

LYNNWOOD WASHINGTON

BALDEN B. BRENDON
STATE OF WASHINGTON
25347
REGISTERED PROFESSIONAL ENGINEER

Drawn By TDS	Date 10/27/14	SCALE
Designed By JS	10/27/14	Horiz 1"=20'-0"
Checked By EBB	10/27/14	Vert 1"=5'-0"
Approved By ----	----	Project Number 20100156

CITY OF LYNNWOOD

POPLAR WAY EXTENSION BRIDGE PHASE 1

WALL PROFILES

Drawing No. WP8

Sheet No. X of Total X

C.S 3120 ~ PROJ. NO. TA2797 ~ NORTHWEST REGION ~ I-5 ~ MP 181.62 ~ CITY OF LYNNWOOD ~ POPLAR WAY EXTENSION BRIDGE

Nov 06, 2014 - 11:46am mmorford J:\60024\CADD\DS001\Drawings\STRUC\20100156_W01.dwg Layout Name: WALL AB

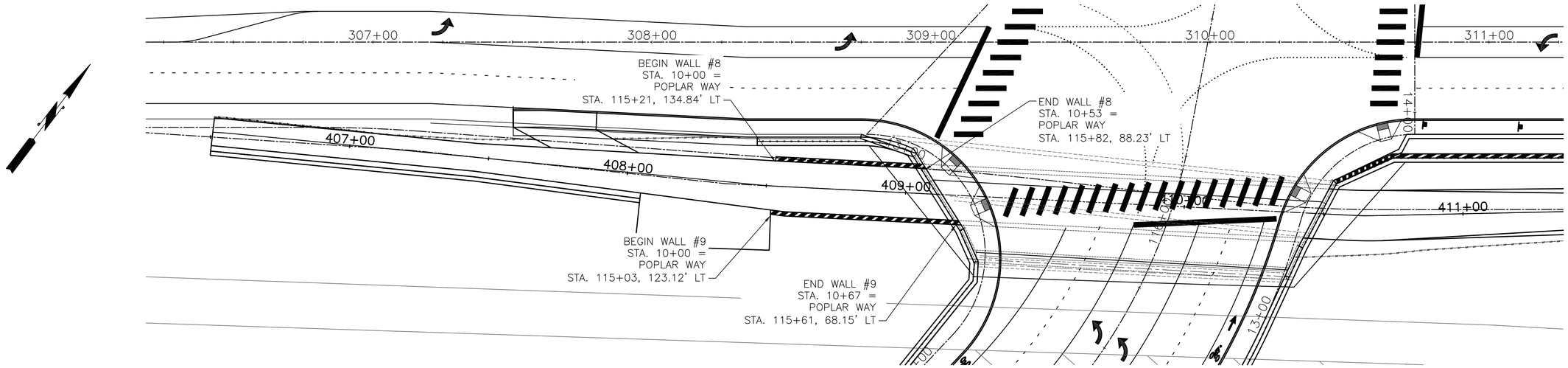

WALL LAYOUT PLAN

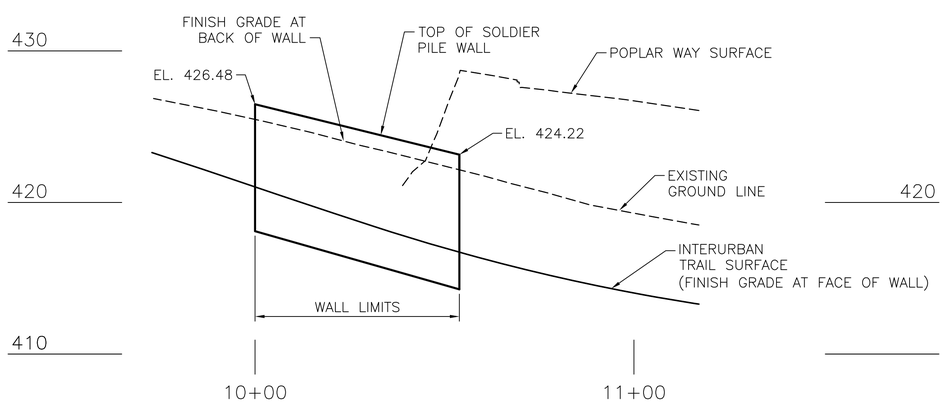

WALL #8 PROFILE

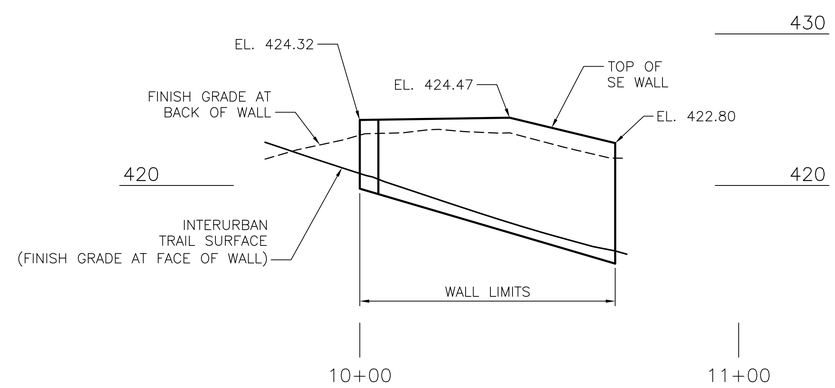

WALL #9 PROFILE

(REFLECTED ELEVATION)

60% REVIEW

NOT FOR CONSTRUCTION

No.	Date	Revision	By	Appr.

HNTB
HNTB Corporation
600 108th Avenue NE
Suite 900
Bellevue, WA 98004
(425) 455-3555

Perteet Inc.
425-252-7700 | 1-800-615-9900
2707 Colby Avenue, Suite 900
Everett, Washington 98201

LYNNWOOD WASHINGTON

ELLEN B. BRENDAN
STATE OF WASHINGTON
25347
REGISTERED
PROFESSIONAL ENGINEER

Drawn By	Date
TDS	10/27/14
Designed By	
JS	10/27/14
Checked By	
EBB	10/27/14
Approved By	
----	----

SCALE
Horiz 1"=20'-0"
Vert 1"=5'-0"
Project Number 20100156

CITY OF LYNNWOOD

POPLAR WAY EXTENSION BRIDGE PHASE 1

WALL PROFILES

Drawing No. WP9

Sheet No. X of Total X

Nov 06, 2014 - 11:47am mmorford J:\60024\CADD\DS001\Drawings\STRUC\20100156_W02.dwg Layout Name: WALL 889

C.S 3120 ~ PROJ. NO. TA2797 ~ NORTHWEST REGION ~ I-5 ~ MP 181.62 ~ CITY OF LYNNWOOD ~ POPLAR WAY EXTENSION BRIDGE

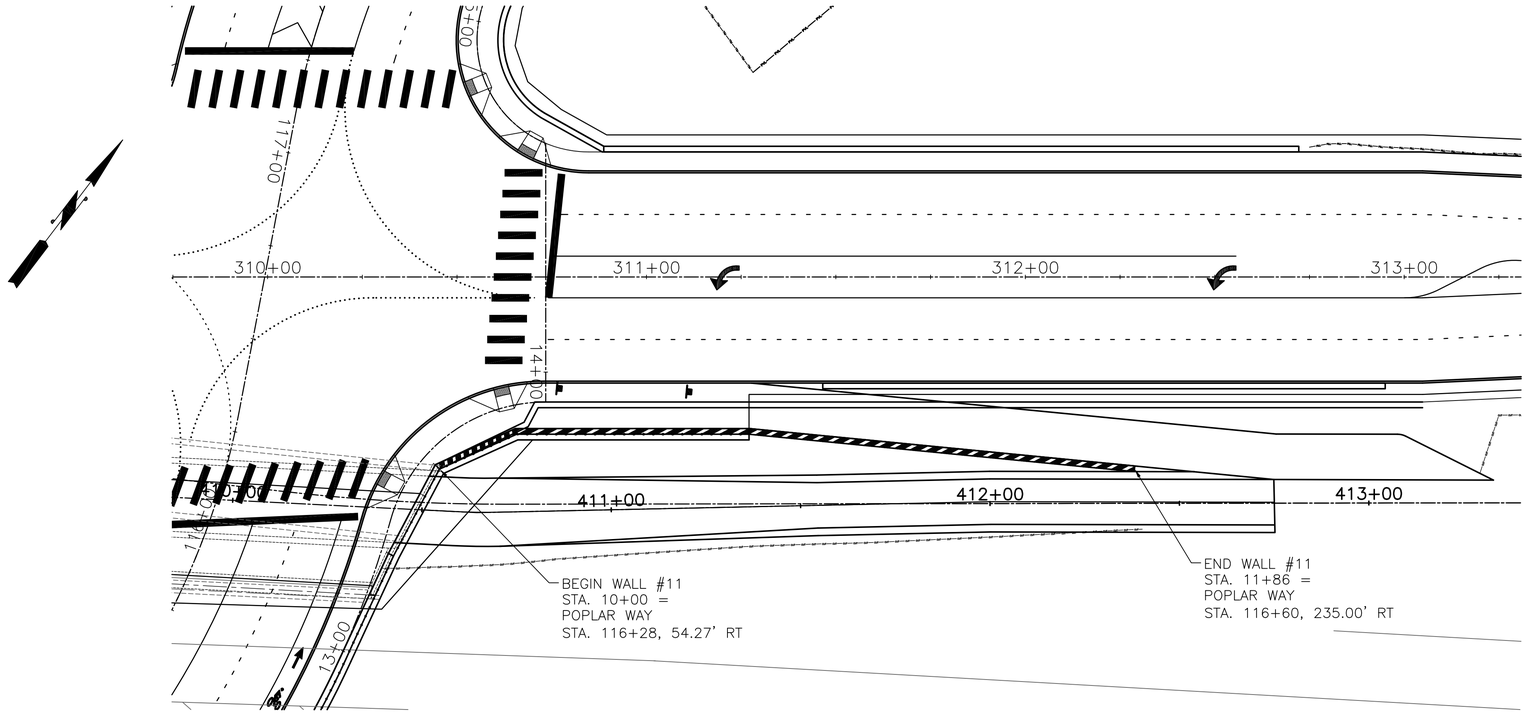

WALL LAYOUT PLAN

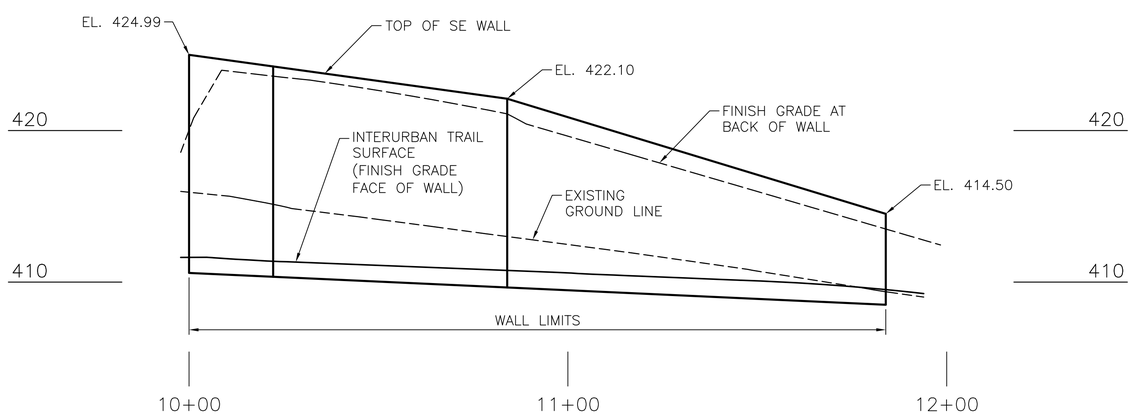

WALL #11 PROFILE

60% REVIEW
NOT FOR CONSTRUCTION

No.	Date	Revision	By	Appr.

HNTB
HNTB Corporation
600 108th Avenue NE
Suite 900
Bellevue, WA 98004
(425) 455-3555

Perteet Inc.
425-252-7700 | 1-800-615-9900
2707 Colby Avenue, Suite 900
Everett, Washington 98201

LYNNWOOD WASHINGTON

EILEEN B. BRENDAN
STATE OF WASHINGTON
25347
REGISTERED
PROFESSIONAL ENGINEER

Drawn By TDS	Date 10/27/14	SCALE
Designed By JS	10/27/14	Horiz 1"=20'-0"
Checked By EBB	10/27/14	Vert 1"=5'-0"
Approved By ----	----	Project Number 20100156

CITY OF LYNNWOOD
POPLAR WAY EXTENSION BRIDGE PHASE 1
WALL PROFILES

Drawing No. WP10
Sheet No. X of Total X

C.S 3120 ~ PROJ. NO. TA2797 ~ NORTHWEST REGION ~ I-5 ~ MP 181.62 ~ CITY OF LYNNWOOD ~ POPLAR WAY EXTENSION BRIDGE

Nov 06, 2014 - 11:47am mmorford J:\60024\CADD\DS001\Drawings\STRUC\20100156_W03.dwg Layout Name: WALL CD11

POINTS OF MINIMUM VERTICAL CLEARANCE:
POPLAR WAY STA. 111+16 (45.5' LT.) = PW-N RAMP STA. 519+28 (27' RT)
POPLAR WAY STA. 111+71 (45.5' LT.) = I-5 LR STA. 519+66 (25' RT)
POPLAR WAY STA. 115+23 (45.5' RT.) = I-5 LL STA. 522+75 (46' LT)
POPLAR WAY STA. 115+94 (45.5' RT.) = I-5 N-W STA. 523+17 (20' LT)

BRIDGE WITH APPROACH FILL
PRESTRESSED CONCRETE GIRDER TYPE WF42G AND WF66G
"A" DIMENSION = 13.75" (SPAN 1) 8.75" (SPANS 2 & 3), 11.5" (SPAN 4) (PRELIMINARY)
DECK PROTECTIVE SYSTEM 1
CAST-IN-PLACE CONCRETE STRENGTH SHALL BE 4000 PSI

SEC. 15, T. 27 N., R. 4 E., W.M.
CITY OF LYNNWOOD

I-5

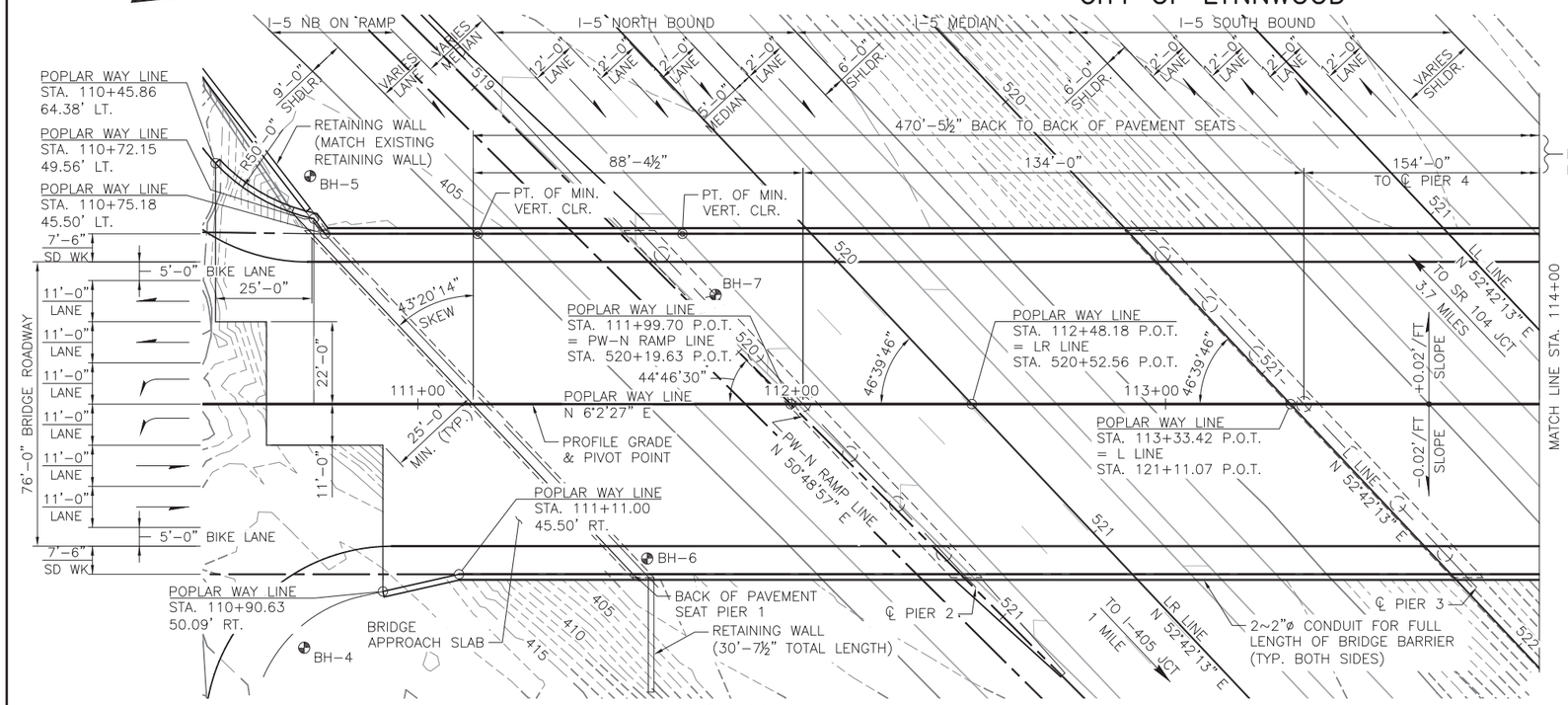

PLAN

BEARING OF PIERS 1 THROUGH 4 IS N 52°42'13" E

LEGEND:

EXISTING UTILITIES
- —W——W— WATER MAIN
- OP—OP—OP OVERHEAD POWER
- SD—SD—SD STORM DRAIN
- BP—BP—BP BURIED POWER
- —G——G— NATURAL GAS

NEW UTILITIES : N.A.

- BORING LOCATION
- LUMINAIRE
- JUNCTION BOX
- DRAIN INLET
- BRIDGE MOUNTED LIGHT POLE

NOTE:
EXISTING UTILITIES SHALL BE REMOVED AS NOTED IN CONTRACT PLANS

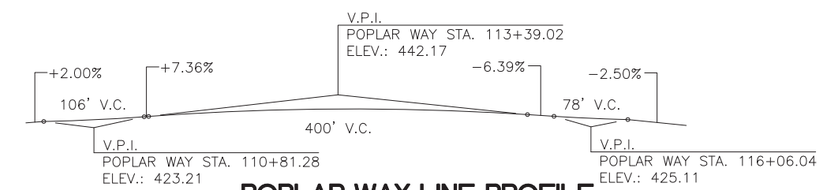

POPLAR WAY LINE PROFILE

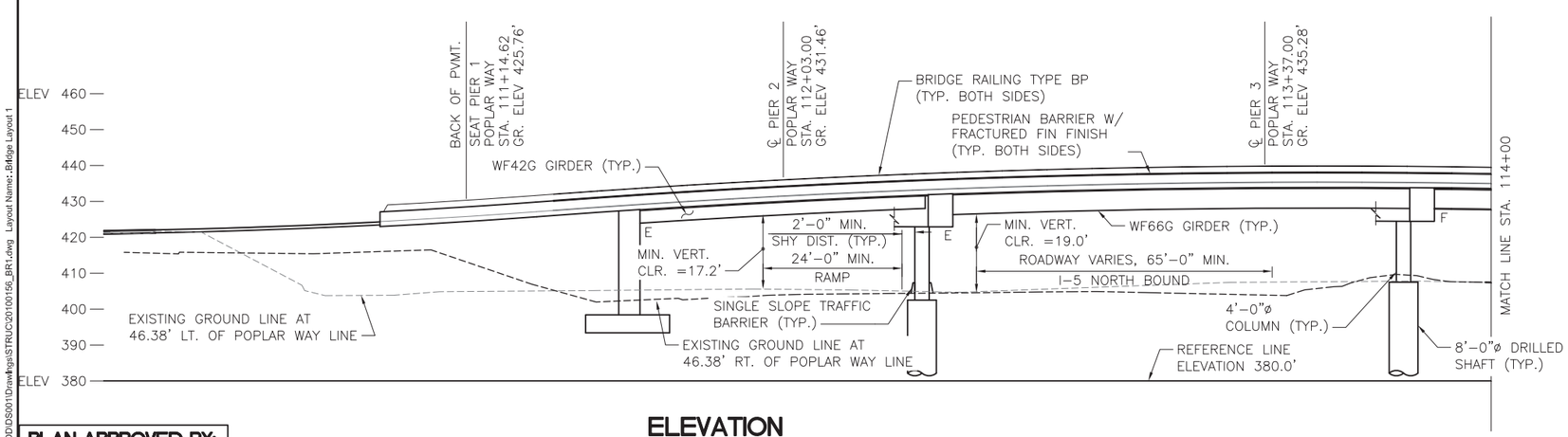

ELEVATION

GRADE ELEVATIONS SHOWN ARE FINISH GRADE AT TOP OF BRIDGE DECK ON POPLAR WAY LINE AND ARE EQUAL TO PROFILE GRADE.

PRESTRESSED CONCRETE GIRDERS
WF66G AND WF42G GIRDERS
LOADING: HL-93

PLAN APPROVED BY:

BRIDGE DESIGN ENGINEER

ENGINEERING MANAGER

DATUM
NAVD-88

60% REVIEW
NOT FOR CONSTRUCTION

No.	Date	Revision	By	Appr.

HNTB
HNTB Corporation
600 108th Avenue NE
Suite 900
Bellevue, WA 98004
(425) 455-3555

Perteet Inc.
425-252-7700 | 1-800-615-9900
2707 Colby Avenue, Suite 900
Everett, Washington 98201

LYNNWOOD WASHINGTON

BILLON B. BRENDON — STATE OF WASHINGTON — 25347 — REGISTERED PROFESSIONAL ENGINEER

Drawn By TDS	Date 08/27/13	SCALE
Designed By EBB	08/27/13	Horiz N/A
Checked By KL	10/14/14	Vert N/A
Approved By		Project Number 20100156

CITY OF LYNNWOOD
POPLAR WAY EXTENSION BRIDGE PHASE 1
BRIDGE LAYOUT 1 OF 2

Drawing No. BR1
Sheet No. 1 of 48 Total

POINTS OF MINIMUM VERTICAL CLEARANCE:
POPLAR WAY STA. 111+16 (45.5' LT.) = PW-N RAMP STA. 519+28 (27' RT)
POPLAR WAY STA. 111+71 (45.5' LT.) = I-5 LR STA. 519+66 (25' RT)
POPLAR WAY STA. 115+23 (45.5' RT.) = I-5 LL STA. 522+75 (46' LT)
POPLAR WAY STA. 115+94 (45.5' RT.) = I-5 N-W STA. 523+17 (20' LT)

BRIDGE WITH APPROACH FILL
PRESTRESSED CONCRETE GIRDER TYPE WF42G AND WF66G
"A" DIMENSION = 13.75" (SPANS 1) 8.75" (SPANS 2 & 3), 11.5" (SPAN 4) (PRELIMINARY)
DECK PROTECTIVE SYSTEM 1
CAST-IN-PLACE CONCRETE STRENGTH SHALL BE 4000 PSI

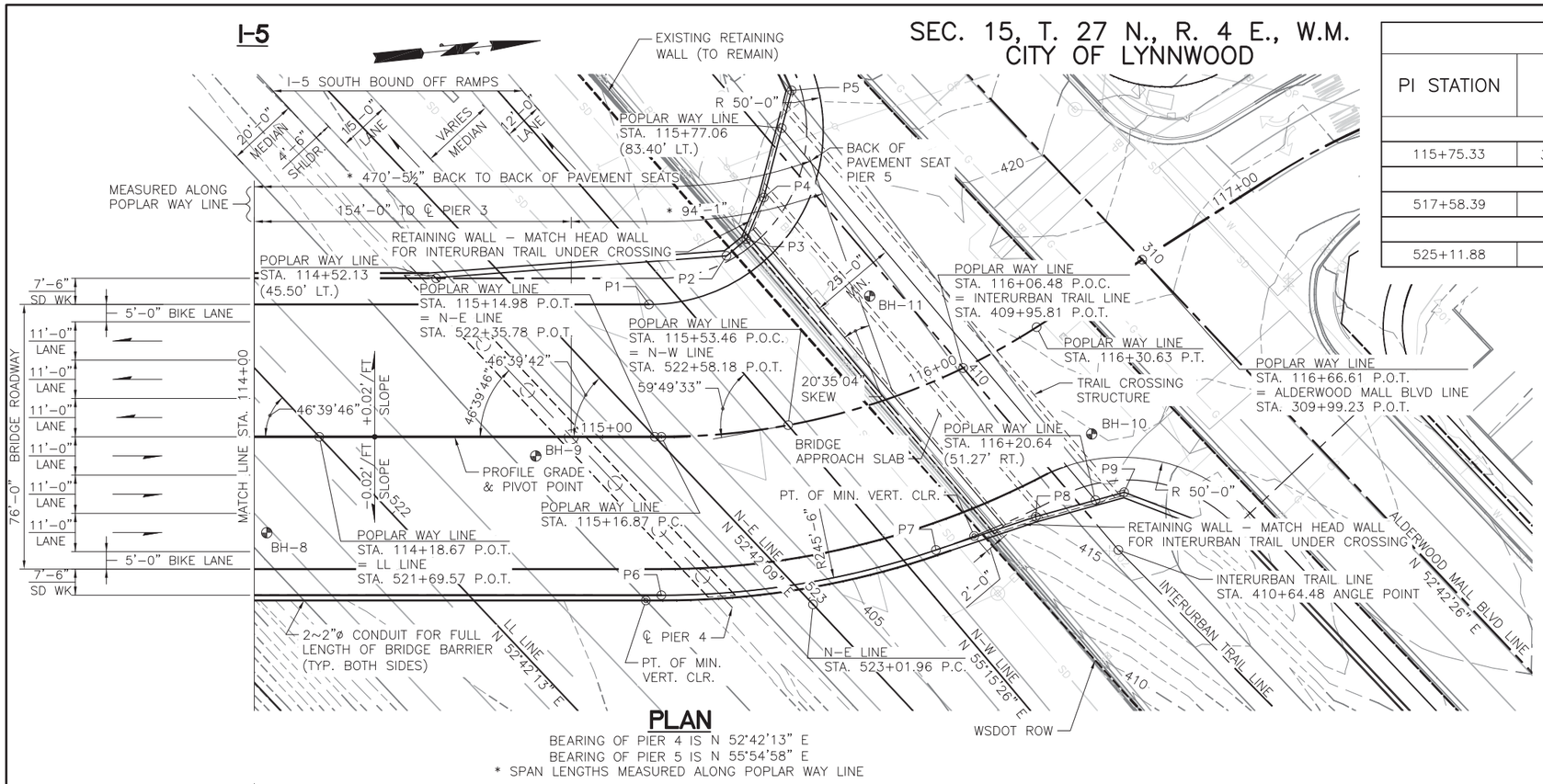

PLAN

BEARING OF PIER 4 IS N 52°42'13" E
BEARING OF PIER 5 IS N 55°54'58" E
* SPAN LENGTHS MEASURED ALONG POPLAR WAY LINE

CURVE DATA

PI STATION	Δ	RADIUS	TANGENT	LENGTH	BACK TANGENT BEARING
POPLAR WAY LINE					
115+75.33	32°35'23" LT.	200'-0"	58.46'	113.76'	N 6°2'27" E
N-W LINE					
517+58.39	3°48'51" LT.	10,500'-0"	349.62'	698.98'	N 52°42'9" E
N-E LINE					
525+11.88	2°17'26"	10500'-5½"	209.92'	419.78'	N 52°42'9" E

SIDEWALK GEOMETRY

POINT CALLOUT	POINT OF ANGLE CHANGE OR CURVATURE AT BARRIER	
	STATION	OFFSET
P1	115+13.33	38.00' LT.
P2	115+41.99	50.79' LT.
P3	115+50.69	54.74' LT.
P4	115+60.92	65.48' LT.
P5	115+92.75	92.75' LT.
P6	115+16.87	45.50' RT
P7	115+82.24	45.50' RT.
P8	116+06.73	47.49' RT.
P9	116+27.19	53.51' RT.

NOTE: ALL POINTS ARE AT INSIDE FACE OF BARRIER

LEGEND:

BORING LOCATION

EXISTING UTILITIES
- WATER MAIN
- OVERHEAD POWER
- STORM DRAIN
- BURIED POWER
- NATURAL GAS

NEW UTILITIES: N.A.

NOTE:
EXISTING UTILITIES SHALL BE REMOVED AS NOTED IN CONTRACT PLANS

- LUMINAIRE
- JUNCTION BOX
- DRAIN INLET
- BRIDGE MOUNTED LIGHT POLE

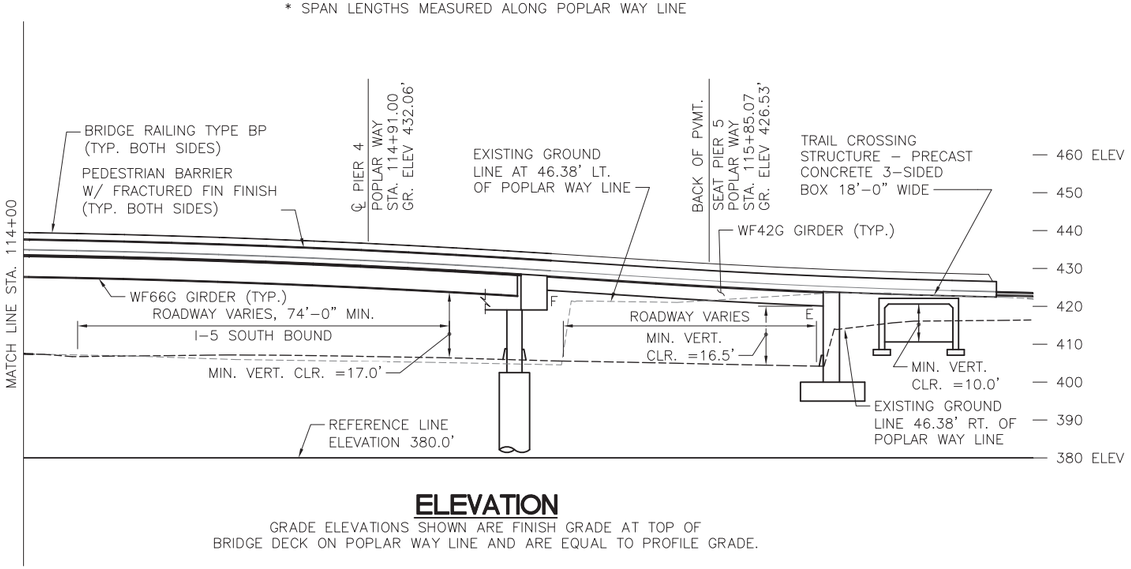

ELEVATION

GRADE ELEVATIONS SHOWN ARE FINISH GRADE AT TOP OF BRIDGE DECK ON POPLAR WAY LINE AND ARE EQUAL TO PROFILE GRADE.

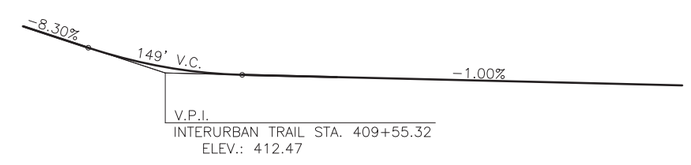

INTERURBAN TRAIL PROFILE

60% REVIEW
NOT FOR CONSTRUCTION

No.	Date	Revision	By	Appr.

HNTB
HNTB Corporation
600 108th Avenue NE
Suite 900
Bellevue, WA 98004
(425) 455-3555

Perteet Inc.
425-252-7700 | 1-800-615-9900
2707 Colby Avenue, Suite 900
Everett, Washington 98201

LYNNWOOD WASHINGTON

BILLIAN B. BRENDEN
STATE OF WASHINGTON
25347
REGISTERED PROFESSIONAL ENGINEER

Drawn By TDS	Date 08/27/13	SCALE
Designed By EBB	08/27/13	Horiz N/A
Checked By KL	10/14/14	Vert N/A
Approved By		Project Number 20100156

CITY OF LYNNWOOD
POPLAR WAY EXTENSION BRIDGE PHASE 1
BRIDGE LAYOUT 2 OF 2

Drawing No. BR2
Sheet No. 2 of Total 48

C.S 3120 ~ PROJ. NO. TA2797 ~ NORTHWEST REGION ~ I-5 ~ MP 181.62 ~ CITY OF LYNNWOOD ~ POPLAR WAY EXTENSION BRIDGE

Oct 20, 2014 - 7:29am tseverson J:\60024\CADD\DS001\Drawings\STRUC\20100156_BR2.dwg Layout Name: BRidge Layout 2

SEC. 15, T. 27 N., R. 4 E., W.M.
CITY OF LYNNWOOD

Existing Elevations at PW-N Ramp (NB I-5 Ramp from Poplar Way)

PW-N Ramp Station	LT Offset	LT Elevation	Mid. Offset	Mid. Elevation	RT Offset	RT Elevation
519+20.00	5.5	405.32	18.2	405.13	27.3	404.89
519+28.04	5.5	405.27	18.2	405.08	27.3	404.86
519+30.00	5.5	405.26	18.2	405.07	27.3	404.85
519+37.08	5.6	405.22	18.3	405.03	27.3	404.82
519+40.00	5.6	405.20	18.3	405.02	27.4	404.80
519+49.67	5.6	405.14	18.3	404.96	27.4	404.76
519+50.00	5.7	405.14	18.3	404.96	27.4	404.76
519+60.00	5.7	405.08	18.3	404.90	27.4	404.68
519+70.00	5.8	405.03	18.4	404.84	27.4	404.59
519+80.00	5.8	404.97	18.4	404.77	27.4	404.50
519+90.00	5.9	404.91	18.3	404.70	27.3	404.41
519+92.36	5.9	404.90	18.3	404.68	27.3	404.39
520+00.00	5.9	404.84	18.3	404.63	27.3	404.35
520+01.35	5.9	404.83	18.3	404.62	27.3	404.34
520+10.00	5.9	404.78	18.3	404.56	27.2	404.30
520+13.63	6.0	404.76	18.3	404.53	27.2	404.28
520+20.00	6.0	404.72	18.3	404.49	27.1	404.25
520+30.00	6.1	404.65	18.3	404.43	27.1	404.20
520+40.00	6.2	404.59	18.2	404.36	27.1	404.15
520+50.00	6.2	404.52	18.2	404.30	27.1	404.11
520+56.83	6.3	404.48	18.2	404.27	27.1	404.09
520+60.00	6.3	404.47	18.2	404.25	27.2	404.08
520+65.77	6.0	404.44	18.2	404.22	27.2	404.05
520+70.00	6.3	404.42	18.2	404.20	27.2	404.02
520+77.59	6.4	404.38	18.2	404.16	27.3	403.97
520+80.00	6.4	404.37	18.2	404.15	27.3	403.95
520+90.00	5.9	404.32	18.2	404.10	27.3	403.89
521+00.00	5.5	404.26	18.3	404.04	27.3	403.82

Existing Elevations at LR Line (NB I-5 Mainline)

I-5 LR Station	CL Elevation	LT Offset	LT Elevation	RT Offset	RT Elevation
519+60.00	405.88	34.2	405.04	25.1	405.36
519+66.33	405.83	34.2	405.01	25.0	405.32
519+70.00	405.80	34.2	404.99	25.1	405.30
519+80.00	405.74	34.2	404.93	25.1	405.23
519+90.00	405.68	34.1	404.87	25.2	405.17
520+00.00	405.62	34.1	404.80	25.2	405.10
520+10.00	405.56	34.1	404.74	25.2	405.04
520+20.00	405.50	34.2	404.65	25.2	404.98
520+22.26	405.49	34.2	404.63	25.2	404.96
520+30.00	405.45	34.2	404.56	25.2	404.91
520+40.00	405.40	34.3	404.48	25.2	404.85
520+50.00	405.35	34.4	404.40	25.2	404.78
520+60.00	405.24	34.3	404.36	25.2	404.72
520+70.00	405.18	34.2	404.31	25.2	404.66
520+80.00	405.12	34.2	404.26	25.2	404.61
520+90.00	405.05	34.2	404.18	25.2	404.55
520+91.30	405.04	34.2	404.17	25.2	404.54
521+00.00	404.98	35.6	404.03	25.2	404.47
521+10.00	404.92	37.2	403.89	25.2	404.40
521+15.12	404.88	37.4	403.86	25.2	404.36
521+20.00	404.85	37.5	403.83	25.2	404.33
521+30.00	404.78	37.8	403.76	25.2	404.26
521+40.00	404.71	37.9	403.70	25.2	404.19
521+50.00	404.65	37.8	403.64	25.2	404.11
521+50.81	404.64	37.8	403.64	25.2	404.11
521+60.00	404.58	37.8	403.59	25.2	404.04

Existing Elevations at LL Line (SB I-5 Mainline)

I-5 LL Station	CL Elevation	LT Offset	LT Elevation	RT Offset	RT Elevation
520+70.00	408.23	44.9	407.01	35.1	407.62
520+73.91	408.21	44.9	407.00	35.1	407.60
520+80.00	408.18	45.0	406.97	35.1	407.57
520+90.00	408.13	45.1	406.93	35.1	407.51
521+00.00	408.07	45.3	406.89	35.1	407.46
521+07.00	408.04	45.4	406.87	35.1	407.42
521+10.00	408.02	45.5	406.86	35.0	407.41
521+20.00	407.97	45.7	406.82	35.1	407.36
521+30.00	407.92	45.9	406.79	35.1	407.31
521+40.00	407.86	45.9	406.76	35.1	407.26
521+50.00	407.81	46.0	406.75	35.2	407.21
521+50.44	407.81	46.0	406.75	35.2	407.21
521+60.00	407.76	46.1	406.74	35.1	407.15
521+70.00	407.71	46.1	406.73	35.1	407.09
521+80.00	407.65	46.2	406.68	35.0	407.02
521+90.00	407.60	46.2	406.64	34.9	406.96
521+99.13	407.54	46.2	406.60	34.9	406.90
522+00.00	407.54	46.2	406.60	34.9	406.90
522+10.00	407.48	46.2	406.55	34.9	406.84
522+20.00	407.42	46.2	406.49	34.9	406.78
522+30.00	407.37	46.2	406.44	34.9	406.73
522+32.13	407.35	46.2	406.43	35.0	406.72
522+40.00	407.31	46.2	406.38	35.0	406.67
522+50.00	407.25	46.2	406.34	35.0	406.62
522+60.00	407.20	46.2	406.30	35.1	406.57
522+70.00	407.14	46.1'	406.26	35.3'	406.43
522+75.49	407.12	46.1'	406.24	35.6'	406.34
522+80.00	407.09	46.1'	406.23	35.3'	406.32

Existing Elevations at N-E Line (East SB I-5 Off Ramp)

N-E Line Station	CL Elevation	LT Offset	LT Elevation	RT Offset	RT Elevation
521+50.00	405.81	8.0	405.67	11.2	405.97
521+60.00	405.78	8.0	405.64	11.2	405.92
521+62.63	405.78	8.0	405.63	11.2	405.91
521+70.00	405.75	8.0	405.61	11.2	405.88
521+73.21	405.74	8.0	405.60	11.2	405.86
521+80.00	405.72	8.0	405.57	11.2	405.83
521+80.80	405.72	8.0	405.56	11.2	405.82
521+90.00	405.68	8.0	405.52	11.3	405.78
522+00.00	405.64	8.0	405.48	11.3	405.73
522+10.00	405.61	8.0	405.44	11.3	405.68
522+20.00	405.57	8.0	405.40	11.3	405.64
522+25.18	405.55	8.0	405.38	11.2	405.62
522+30.00	405.54	8.0	405.37	11.2	405.60
522+40.00	405.50	8.0	405.33	11.2	405.55
522+43.11	405.49	8.0	405.32	11.1	405.55
522+50.00	405.47	8.0	405.29	11.2	405.55
522+60.00	405.43	8.0	405.25	11.2	405.55
522+70.00	405.40	8.0	405.22	11.2	405.55
522+80.00	405.37	8.0	405.19	11.2	405.54
522+86.11	405.35	8.0	405.17	11.2	405.53
522+90.00	405.34	8.0	405.16	11.2	405.52
522+94.23	405.33	8.0	405.15	11.2	405.51
522+99.52	405.31	8.0	405.13	11.2	405.50
523+00.00	405.31	8.0	405.13	11.2	405.49
523+10.00	405.28	8.0	405.10	11.2	405.47

Existing Elevations at N-W Line (West SB I-5 Off Ramp)

N-W Line Station	CL Elevation	LT Offset	LT Elevation	RT Offset	RT Elevation
521+90.00	405.13	22.8	404.69	6.4	405.27
521+96.94	405.07	22.8	404.65	6.4	405.20
522+00.00	405.06	22.8	404.63	6.4	405.21
522+02.32	405.04	22.8	404.62	6.4	405.20
522+10.00	405.01	22.8	404.57	6.5	405.16
522+10.47	405.01	22.8	404.57	6.5	405.16
522+20.00	404.96	22.8	404.51	6.6	405.12
522+30.00	404.92	22.7	404.48	6.6	405.07
522+40.00	404.88	22.6	404.47	6.6	405.03
522+50.00	404.84	22.5	404.46	6.7	404.98
522+54.12	404.83	22.5	404.45	6.7	404.97
522+60.00	404.81	22.5	404.44	6.7	404.95
522+69.35	404.78	22.4	404.41	6.7	404.92
522+70.00	404.74	22.4	404.40	6.7	404.92
522+80.00	404.74	22.4	404.36	6.8	404.89
522+90.00	404.71	22.3	404.32	6.8	404.86
523+00.00	404.67	22.3	404.26	6.8	404.83
523+06.04	404.65	22.3	404.23	6.8	404.80
523+09.18	404.64	22.3	404.21	6.8	404.79
523+10.00	404.64	22.3	404.20	6.8	404.79
523+17.80	404.63	22.4	404.19	6.8	404.78
523+20.00	404.62	22.4	404.19	6.8	404.78

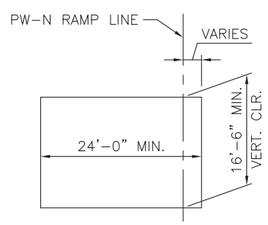

CONSTRUCTION OPENING DIAGRAM (PW-N RAMP)

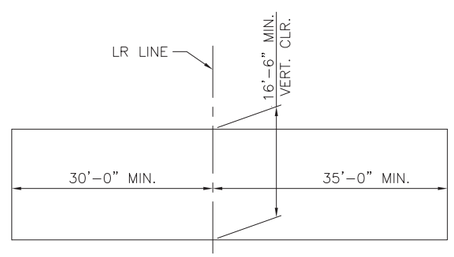

CONSTRUCTION OPENING DIAGRAM (NB I-5)

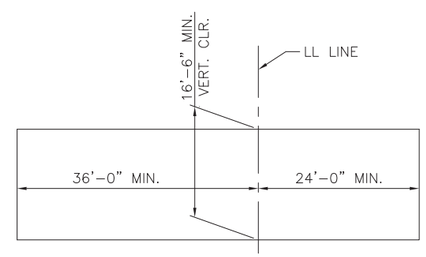

CONSTRUCTION OPENING DIAGRAM (SB I-5)

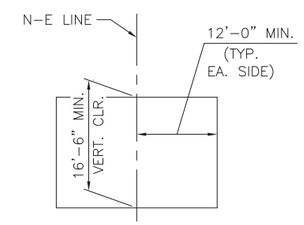

CONSTRUCTION OPENING DIAGRAM (N-E RAMP)

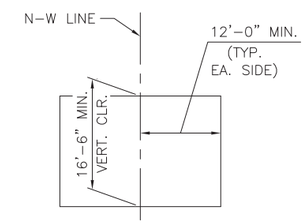

CONSTRUCTION OPENING DIAGRAM (N-W RAMP)

60% REVIEW
NOT FOR CONSTRUCTION

No.	Date	Revision	By	Appr.

HNTB
HNTB Corporation
600 108th Avenue NE
Suite 900
Bellevue, WA 98004
(425) 455-3555

Perteet Inc.
425-252-7700 | 1-800-615-9900
2707 Colby Avenue, Suite 900
Everett, Washington 98201

LYNNWOOD WASHINGTON

BALDIN B. BRENDON — STATE OF WASHINGTON — 25347 — REGISTERED PROFESSIONAL ENGINEER

Drawn By	Date
TDS	
Designed By	
EBB	
Checked By	
Approved By	

SCALE
Horiz N/A
Vert N/A
Project Number 20100156

CITY OF LYNNWOOD
POPLAR WAY EXTENSION BRIDGE PHASE 1
I-5 ROADWAY ELEVATIONS

Drawing No. BR4
Sheet No. 3 of Total 48

Oct 07, 2014 - 1:10pm tseverson J:\60024\CADD\DS001\Drawings\STRUC\20100156_BR4.dwg Layout Name:;I-5 Roadway Elevations
C.S 3120 ~ PROJ. NO. TA2797 ~ NORTHWEST REGION ~ I-5 ~ MP 181.62 ~ CITY OF LYNNWOOD ~ POPLAR WAY EXTENSION BRIDGE

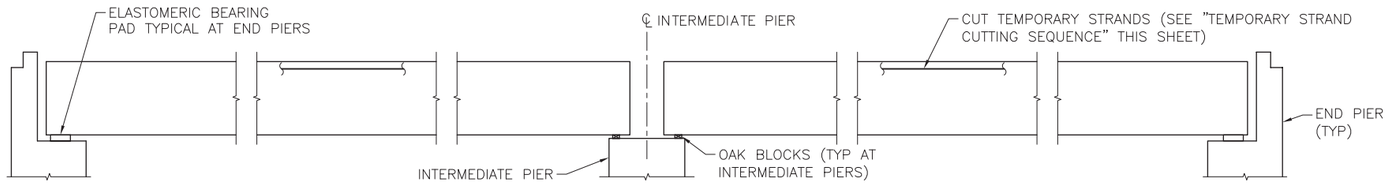

PHASE 1
SET GIRDERS IN PLACE

INSTALL TEMPORARY BRACING FOR ERECTION IN ACCORDANCE WITH WSDOT STD. SPEC. SECTION 6-02.3(17)F.

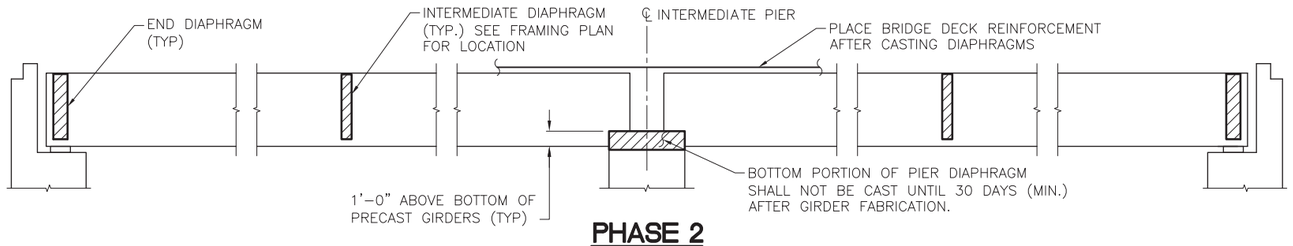

PHASE 2
CAST DIAPHRAGMS AND PLACE BRIDGE DECK REINFORCEMENT

INSTALL TEMPORARY BRACING FOR DIAPHRAGM AND DECK PLACEMENT IN ACCORDANCE WITH WSDOT STD. SPEC. SECTION 6-02.3(17)F.

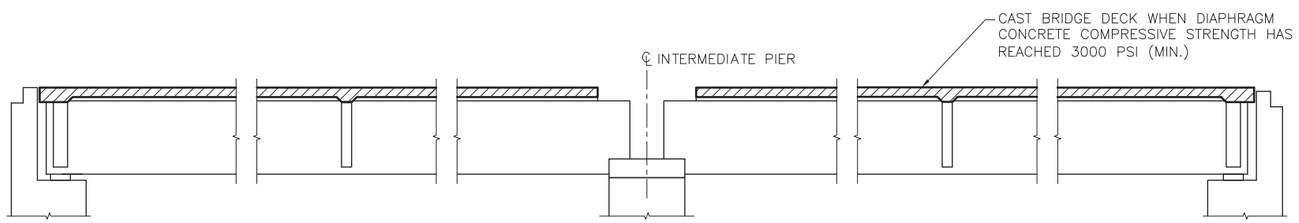

PHASE 3
CAST BRIDGE DECK

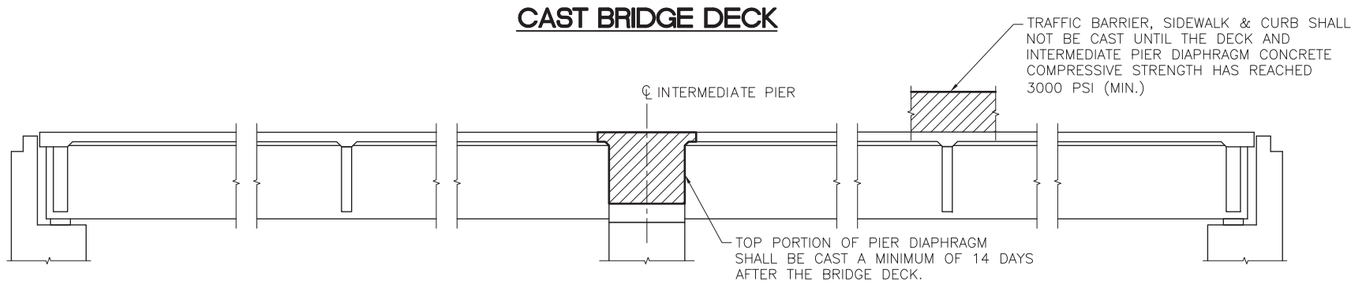

PHASE 4
COMPLETE DIAPHRAGMS

NOTE:
NO LIVE LOAD SHALL BE ALLOWED ON THE SPANS UNTIL THE COMPRESSIVE STRENGTH OF THE TOP PORTION OF THE PIER DIAPHRAGM HAS REACHED 3000 PSI (MIN.).

CONSTRUCTION SEQUENCE - SUPERSTRUCTURE

SCALE: NOT TO SCALE

TEMPORARY STRAND CUTTING SEQUENCE

1. ERECT AND BRACE GIRDERS.
2. REMOVE EXPANDED POLYSTYRENE IN 2"x6" RECESSES IN TOP FLANGE OF GIRDERS.
3. CUT STRANDS IN 2"x6"RECESSES. STRANDS MAY BE CUT BY USING A CUTTING TORCH AND MOVING THE FLAME BACK AND FORTH OVER THE LENGTH OF EXPOSED STRAND TO LET INDIVIDUAL WIRES BREAK ONE AT A TIME TO LESSEN THE SHOCK TO THE GIRDER. STRANDS SHALL BE RELEASED IN A SYMMETRICAL MANNER AROUND THE GIRDER CENTERLINE STARTING WITH THOSE NEAREST THE CENTERLINE AND WORKING OUTWARDS.
4. REMOVE ALL MOISTURE IN RECESS PRIOR TO FILLING RECESS WITH GROUT.

60% REVIEW
NOT FOR CONSTRUCTION

No.	Date	Revision	By	Appr.

HNTB
HNTB Corporation
600 108th Avenue NE
Suite 900
Bellevue, WA 98004
(425) 455-3555

Perteet Inc.
425-252-7700 | 1-800-615-9900
2707 Colby Avenue, Suite 900
Everett, Washington 98201

LYNNWOOD WASHINGTON

BRIAN B. BRANDON
STATE OF WASHINGTON
25347
REGISTERED PROFESSIONAL ENGINEER

Drawn By TDS	Date 10/10/14	SCALE	
Designed By EBB	10/10/14	Horiz N/A	
Checked By KL	10/14/14	Vert N/A	
Approved By		Project Number 20100156	

CITY OF LYNNWOOD
POPLAR WAY EXTENSION BRIDGE PHASE 1
SUPERSTRUCTURE CONSTRUCTION SEQUENCE

Drawing No. BR5
Sheet No. 4 of Total 48

C.S 3120 ~ PROJ. NO. TA2797 ~ NORTHWEST REGION ~ I-5 ~ MP 181.62 ~ CITY OF LYNNWOOD ~ POPLAR WAY EXTENSION BRIDGE
Oct 17, 2014 - 10:41am tseverson J:\60024\CADD\DS001\Drawings\STRUC\20100156_BR5.dwg Layout Name: -GirderConSeq

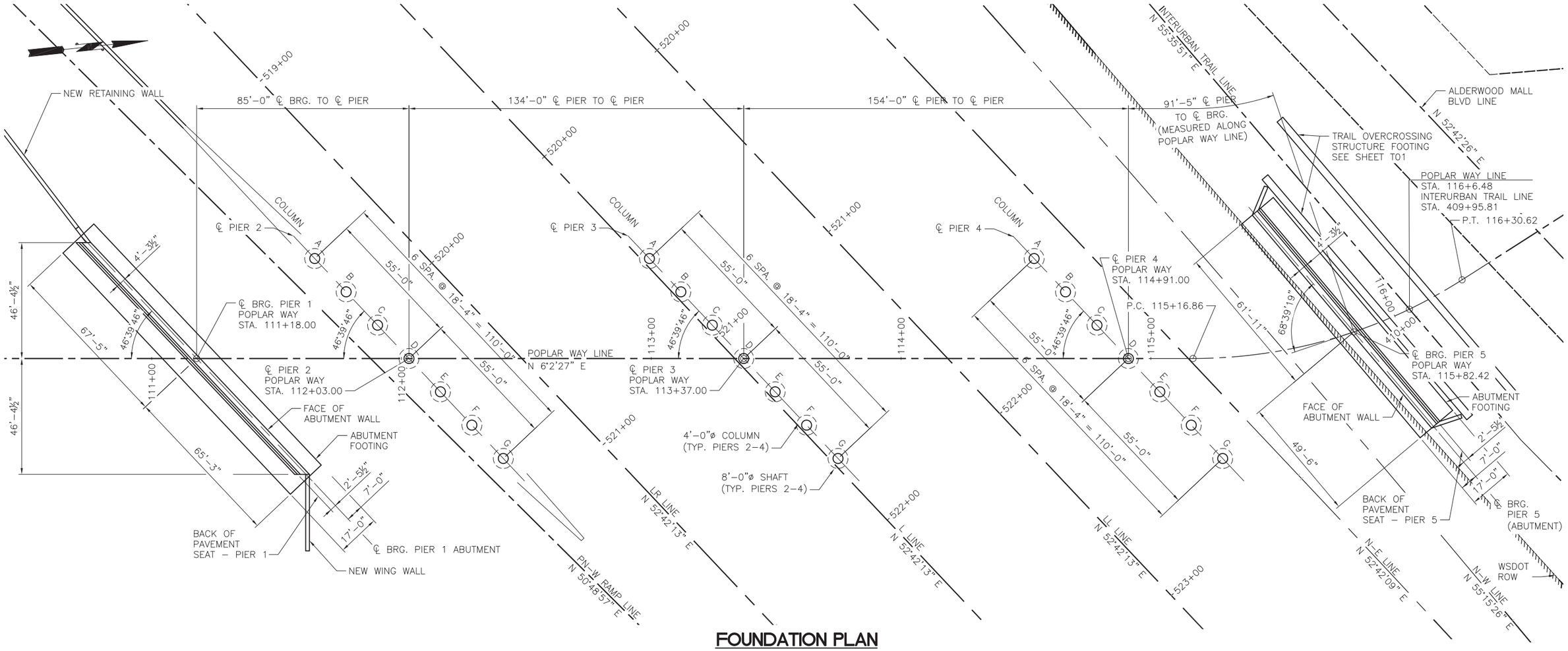

FOUNDATION PLAN

60% REVIEW
NOT FOR CONSTRUCTION

No.	Date	Revision	By	Appr.

HNTB
HNTB Corporation
600 108th Avenue NE
Suite 900
Bellevue, WA 98004
(425) 455-3555

Perteet Inc.
425-252-7700 | 1-800-615-9900
2707 Colby Avenue, Suite 900
Everett, Washington 98201

LYNNWOOD WASHINGTON

ELLEN B. BRENDEN
STATE OF WASHINGTON
25347
REGISTERED PROFESSIONAL ENGINEER

Drawn By TDS	Date 10/10/14	SCALE	
Designed By EBB	10/10/14	Horiz N/A	
Checked By KL	10/14/14	Vert N/A	
Approved By		Project Number 20100156	

CITY OF LYNNWOOD
POPLAR WAY EXTENSION BRIDGE PHASE 1
FOUNDATION LAYOUT

Drawing No. BR6
Sheet No. 5 of Total 48

Oct 21, 2014 - 1:00pm rschiffert J:\60024\CADD\DS001\Drawings\STRUC\20100156_BR6.dwg Layout Name: Foundation Layout

C.S 3120 ~ PROJ. NO. TA2797 ~ NORTHWEST REGION ~ I-5 ~ MP 181.62 ~ CITY OF LYNNWOOD ~ POPLAR WAY EXTENSION BRIDGE

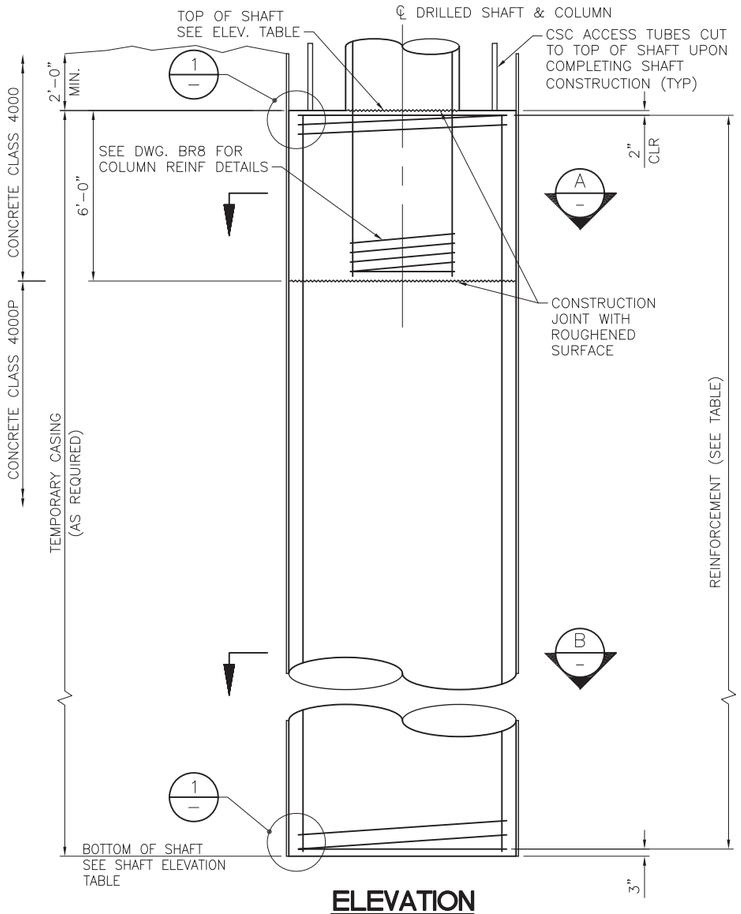

ELEVATION

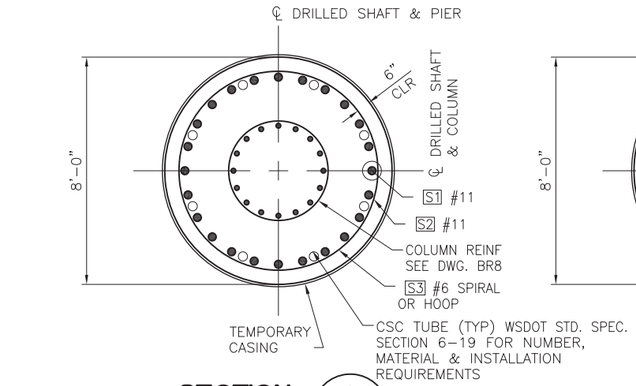

SECTION A

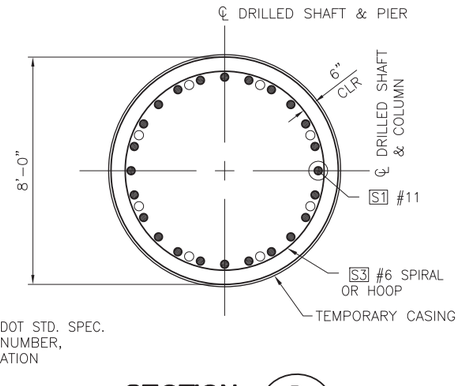

SECTION B

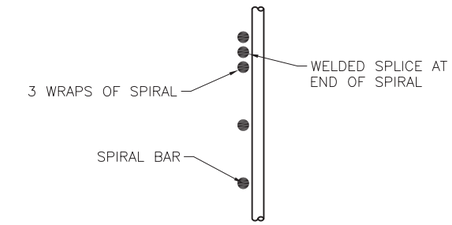

SPIRAL TERMINATION

DETAIL 1 / BR8

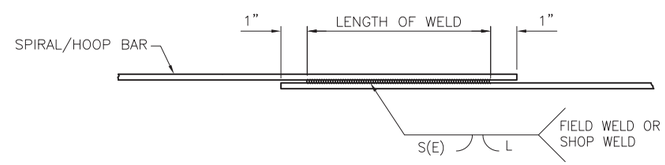

WELDED SPLICE DETAIL

WELDING SHALL MEET THE REQUIREMENTS OF WSDOT STD. SPEC. SECTION 6-02.3(24)E FOR WELD DIMENSIONS. SEE TABLE BELOW.

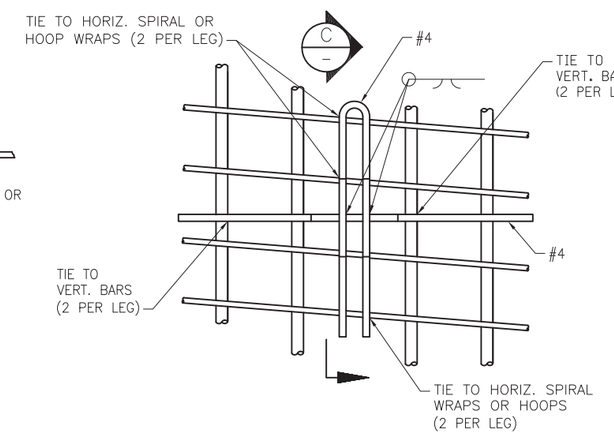

EPOXY COAT CENTRALIZER OR PAINT WITH INORGANIC ZINC AFTER FABRICATION

CENTRALIZER DETAIL

SEE WSDOT STD. SPEC. SECTION 6-19.3 (5) B FOR SPACING REQUIREMENTS

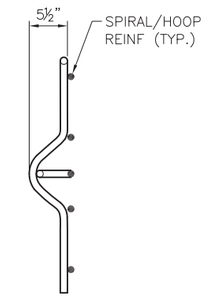

SECTION C

SHAFT HOOP OPTIONS

	WELD DIMENSIONS (IN.)		
	S	E	LENGTH (L)
#7	7/16	1/4	7
#8	1/2	1/4	8
#9	9/16	5/16	8

SHAFT SPIRAL OPTIONS

	WELD DIMENSIONS (IN.)		
	S	E	LENGTH (L)
#4	1/4	1/8	4
#5	5/16	3/16	6
#6	3/8	3/16	6

SHAFT REINFORCING TABLE

PIER NO.	LENGTH (FT)	STIRRUP REINFORCING	LONG. REINFORCING
2	XXXX	XXXX	XXXX
3	XXXX	XXXX	XXXX
4	XXXX	XXXX	XXXX

SHAFT ELEVATION TABLE

	PIER 2	PIER 3	PIER 4
TOP OF SHAFT	402.50	407.50	402.50
BOTTOM OF SHAFT	372.50	377.50	372.50

NOTES:

1. REMOVE SEDIMENT LAITENCE AND WEAK CONCRETE TO SOUND CONCRETE PRIOR TO SETTING COLUMN REINFORCEMENT.
2. ALL HOOPS OR SPIRAL SHALL HAVE WELDED LAP SPLICES. SEE WELDED LAP SPLICE DETAIL.

60% REVIEW
NOT FOR CONSTRUCTION

No.	Date	Revision	By	Appr.

HNTB Corporation
600 108th Avenue NE
Suite 900
Bellevue, WA 98004
(425) 455-3555

Perteet Inc.
425-252-7700 | 1-800-615-9900
2707 Colby Avenue, Suite 900
Everett, Washington 98201

LYNNWOOD WASHINGTON

BRANDON, BILLAN B. — STATE OF WASHINGTON — 25347 — REGISTERED PROFESSIONAL ENGINEER

Drawn By TDS	Date 10/10/14	SCALE
Designed By EBB	10/10/14	Horiz N/A
Checked By KL	10/14/14	Vert N/A
Approved By		Project Number 20100156

CITY OF LYNNWOOD
POPLAR WAY EXTENSION BRIDGE PHASE 1
PIERS 2 THRU 4 SHAFT DETAILS

Drawing No. BR7
Sheet No. 6 of Total 48

C.S. 3120 ~ PROJ. NO. TA2797 ~ NORTHWEST REGION ~ I-5 ~ MP 181.62 ~ CITY OF LYNNWOOD ~ POPLAR WAY EXTENSION BRIDGE

Oct 20, 2014 - 8:40am tseverson J:\60024\CADD\DS001\Drawings\STRUC\20100156_BR7.dwg Layout Name: Piers 2 thru 4 Shaft Details

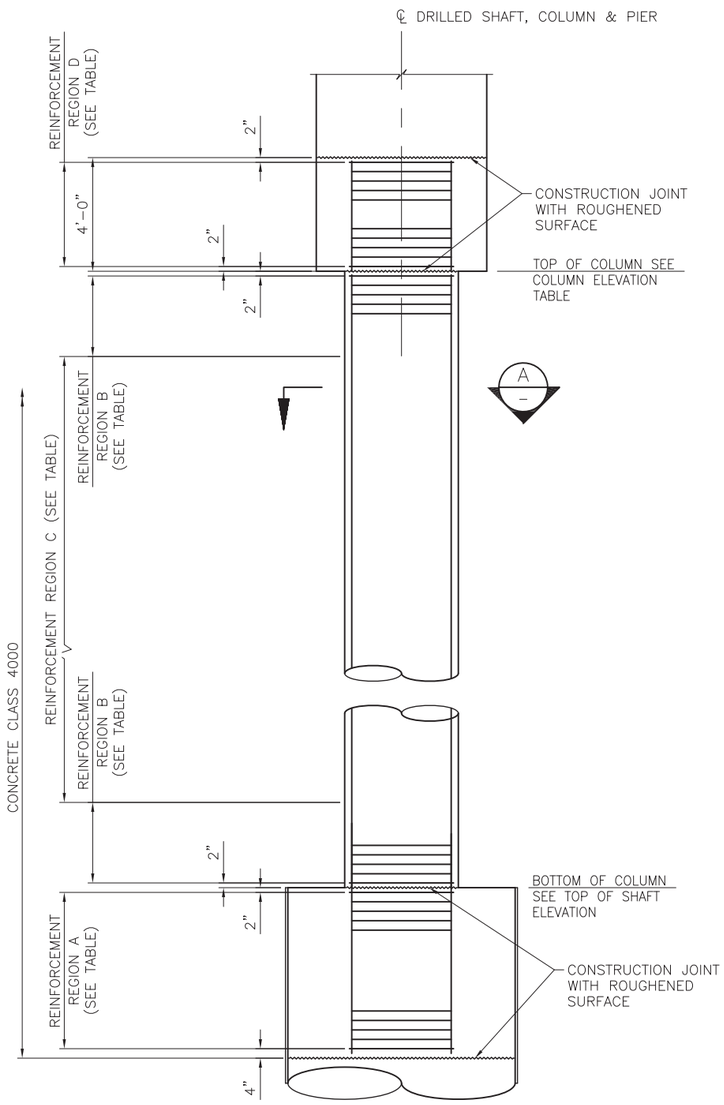

ELEVATION

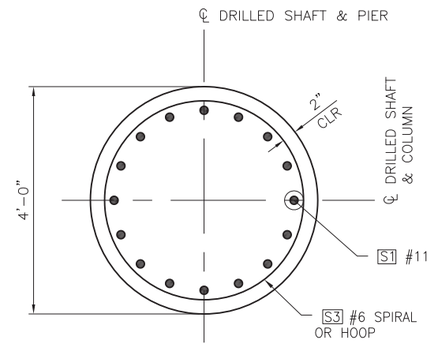

SECTION A

NOTES:

1. ALL HOOPS OR SPIRALS SHALL HAVE WELDED LAP SPLICES. SEE WELDED LAP SPLICE DETAIL ON DRAWING BR7.
2. COLUMN LONGITUDINAL REINFORCING SHALL BE CONTINUOUS & SHALL NOT BE SPLICED.

COLUMN REINFORCING TABLE

PIER NO.	REGION A		REGION B		REGION C		REGION D	
	LENGTH (FT)	SPIRAL REINFORCING	LENGTH (FT)	HOOP REINFORCING	LENGTH (FT)	HOOP REINFORCING	LENGTH (FT)	HOOP REINFORCING
2	XXXX	#X @ X"	XXXX	XXXX	XXXX	XXXX	XXXX	XXXX
3	XXXX	#X @ X"	XXXX	XXXX	XXXX	XXXX	XXXX	XXXX
4	XXXX	#X @ X"	XXXX	XXXX	XXXX	XXXX	XXXX	XXXX

COLUMN ELEVATION TABLE

PIER NO.	TOP OF COLUMN ELEVATION						
	COLUMN						
	A	B	C	D	E	F	G
2	XXXX	XXXX	XXXX	XXXX	XXXX	XXXX	XXXX
3	XXXX	XXXX	XXXX	XXXX	XXXX	XXXX	XXXX
4	XXXX	XXXX	XXXX	XXXX	XXXX	XXXX	XXXX

60% REVIEW
NOT FOR CONSTRUCTION

No.	Date	Revision	By	Appr.

HNTB
HNTB Corporation
600 108th Avenue NE
Suite 900
Bellevue, WA 98004
(425) 455-3555

Perteet Inc.
425-252-7700 I 1-800-615-9900
2707 Colby Avenue, Suite 900
Everett, Washington 98201

LYNNWOOD WASHINGTON

ELLEN B. BRENDEN
STATE OF WASHINGTON
25347
REGISTERED PROFESSIONAL ENGINEER

Drawn By	TDS	Date 10/10/14
Designed By	EBB	10/10/14
Checked By	KL	10/14/14
Approved By		

SCALE
Horiz N/A
Vert N/A
Project Number 20100156

CITY OF LYNNWOOD
POPLAR WAY EXTENSION BRIDGE PHASE 1
PIERS 2 THRU 4 COLUMN DETAILS

Drawing No. BR8
Sheet No. 7 of Total 48

Oct 21, 2014 - 1:04pm rschiffer1 J:\60024\CADD\DS001\Drawings\STRUC\20100156_BR8.dwg Layout Name: Piers 2 thru 4 Column Details
C.S 3120 ~ PROJ. NO. TA2797 ~ NORTHWEST REGION ~ I-5 ~ MP 181.62 ~ CITY OF LYNNWOOD ~ POPLAR WAY EXTENSION BRIDGE

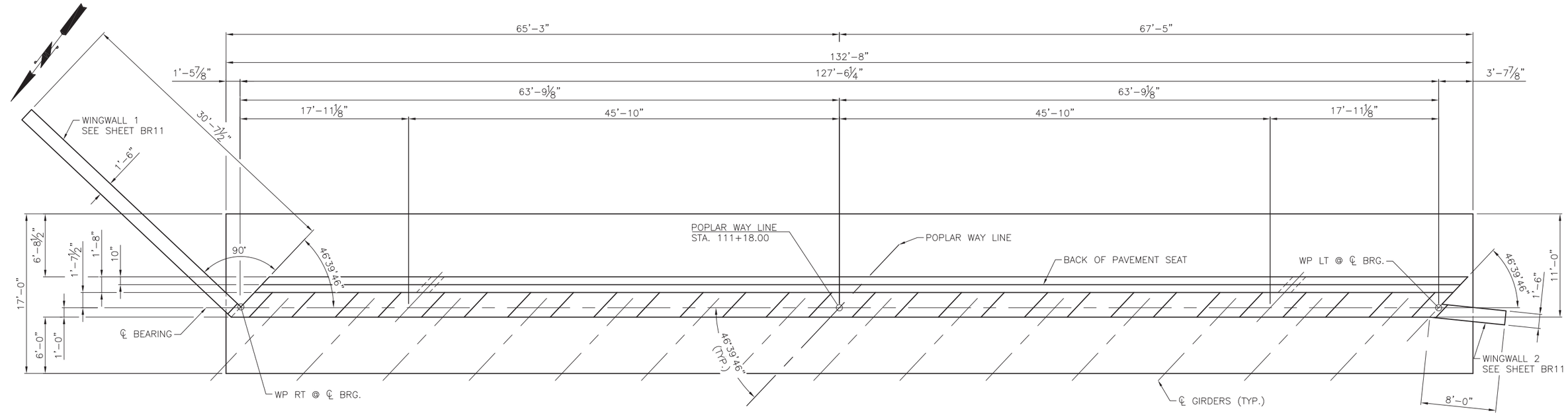

PIER 1 - PLAN

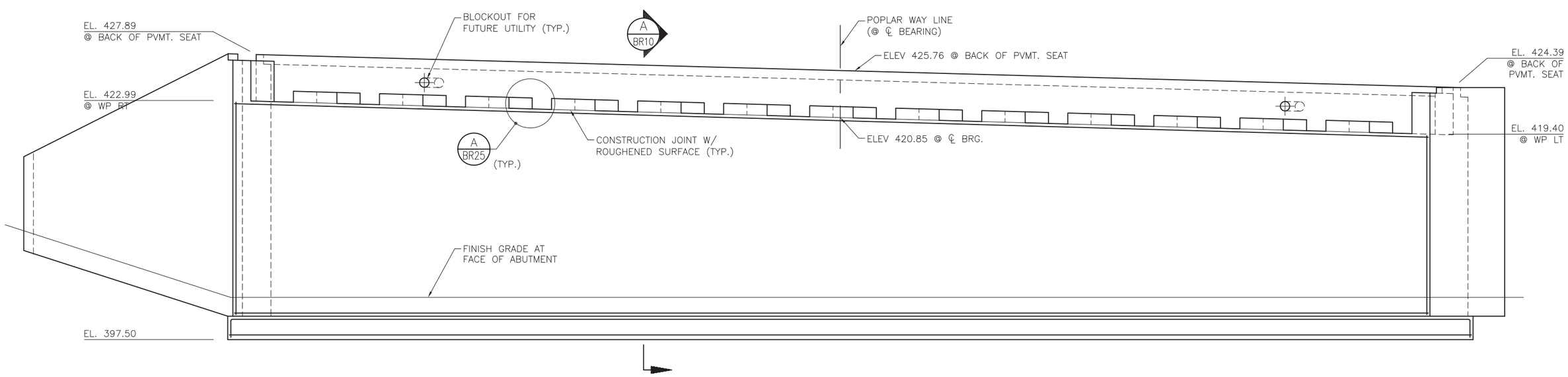

PIER 1 - ELEVATION

ELEVATION SHOWN LOOKING BACK ON STATION

60% REVIEW

NOT FOR CONSTRUCTION

No.	Date	Revision	By	Appr.

HNTB
HNTB Corporation
600 108th Avenue NE
Suite 900
Bellevue, WA 98004
(425) 455-3555

Perteet Inc.
425-252-7700 | 1-800-615-9900
2707 Colby Avenue, Suite 900
Everett, Washington 98201

LYNNWOOD WASHINGTON

BILLION B. BRENDAN — STATE OF WASHINGTON — 25347 — REGISTERED PROFESSIONAL ENGINEER

Drawn By TDS	Date 10/10/14	SCALE	
Designed By EBB	10/10/14	Horiz N/A	
Checked By KL	10/14/14	Vert N/A	
Approved By		Project Number 20100156	

CITY OF LYNNWOOD

POPLAR WAY EXTENSION BRIDGE PHASE 1

PIER 1 PLAN AND ELEVATION

Drawing No. BR9

Sheet No. 8 / 48 of Total

Oct 21, 2014 - 11:50am tseverson J:\60024\CADD\DS001\Drawings\STRUC\20100156_BR9.dwg Layout Name: -Pier 1 Plan and Elevation

C.S 3120 ~ PROJ. NO. TA2797 ~ NORTHWEST REGION ~ I-5 ~ MP 181.62 ~ CITY OF LYNNWOOD ~ POPLAR WAY EXTENSION BRIDGE

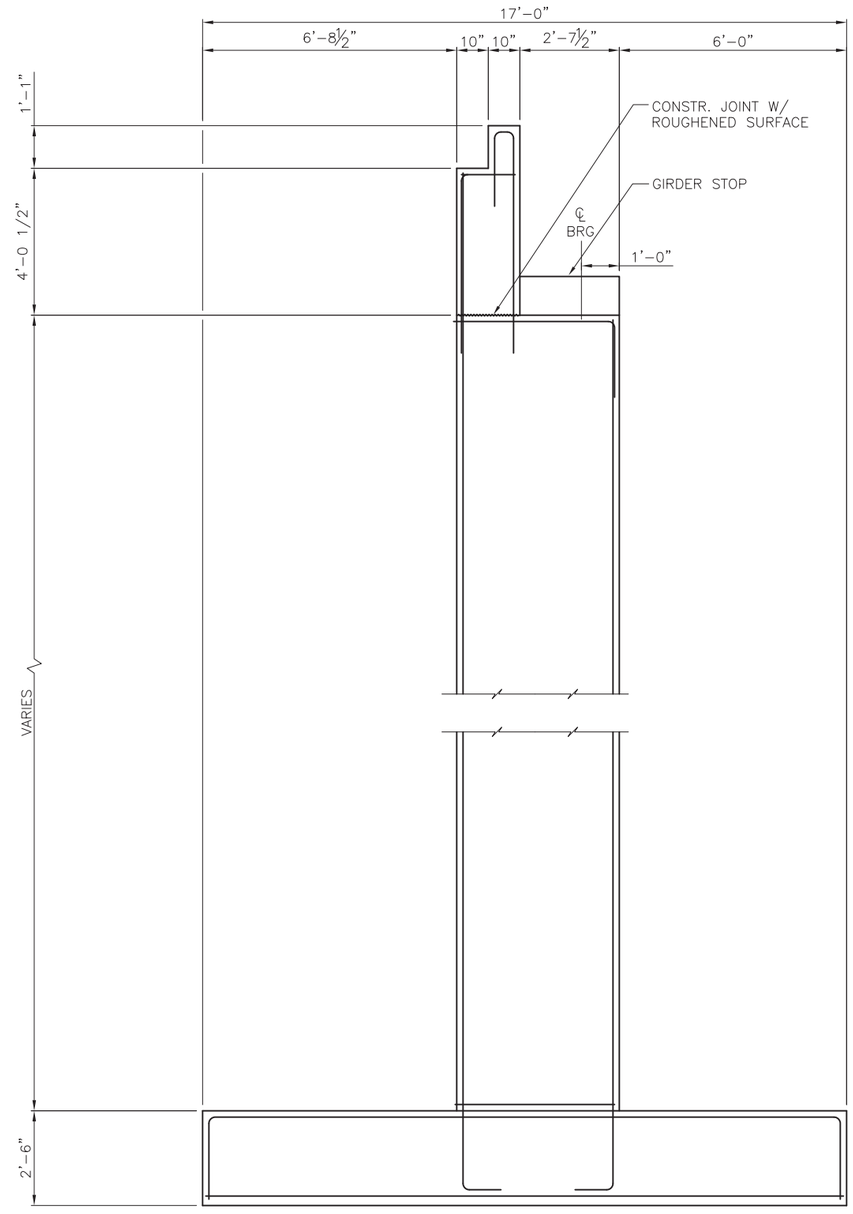

SECTION A / BR9

60% REVIEW
NOT FOR CONSTRUCTION

No.	Date	Revision	By	Appr.

HNTB
HNTB Corporation
600 108th Avenue NE
Suite 900
Bellevue, WA 98004
(425) 455-3555

Perteet Inc.
425-252-7700 | 1-800-615-9900
2707 Colby Avenue, Suite 900
Everett, Washington 98201

LYNNWOOD WASHINGTON

ALLAN B. BRENDSEN
STATE OF WASHINGTON
25347
REGISTERED
PROFESSIONAL ENGINEER

Drawn By TDS	Date 10/10/14	SCALE	
Designed By EBB	10/10/14	Horiz N/A	
Checked By KL	10/14/14	Vert N/A	
Approved By		Project Number 20100156	

CITY OF LYNNWOOD
POPLAR WAY EXTENSION BRIDGE PHASE 1
PIER 1 SECTIONS

Drawing No. BR10
Sheet No. 9 of Total 48

C.S. 3120 ~ PROJ. NO. TA2797 ~ NORTHWEST REGION ~ I-5 ~ MP 181.62 ~ CITY OF LYNNWOOD ~ POPLAR WAY EXTENSION BRIDGE

Oct 21, 2014 - 12:58pm rschiffert J:\60024\CADD\DS001\Drawings\STRUC\20100156_BR10.dwg Layout Name:_Pier 1 Sections

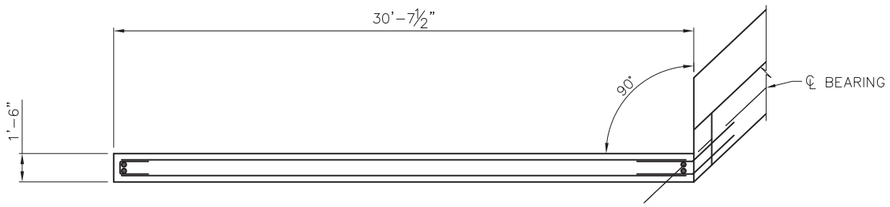

PLAN

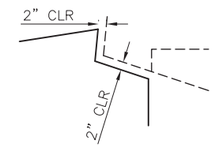

DETAIL 1 / –

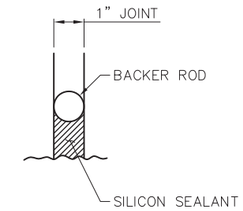

DETAIL 2 / –

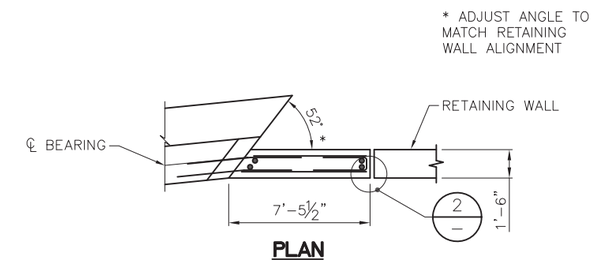

PLAN

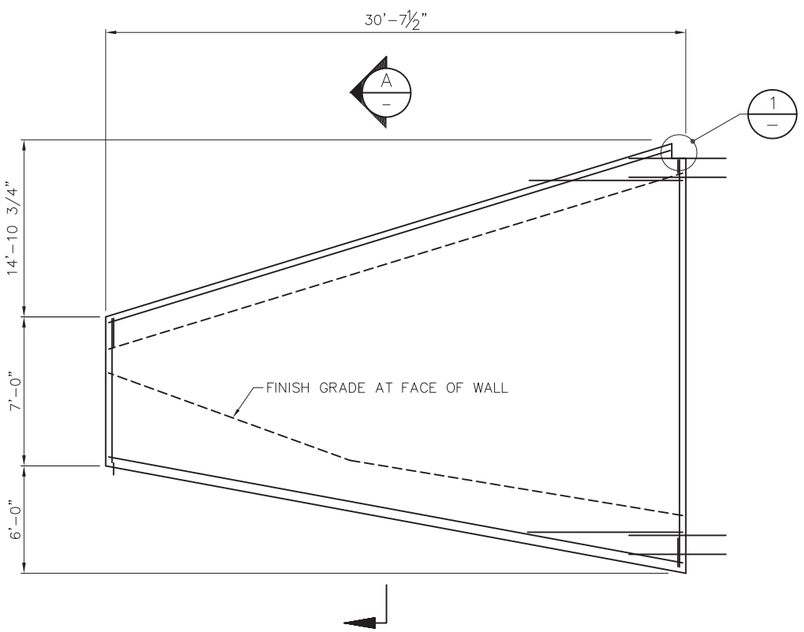

FRONT FACE

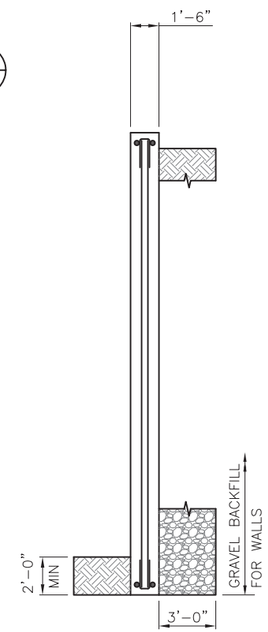

SECTION A / –

WING WALL 1

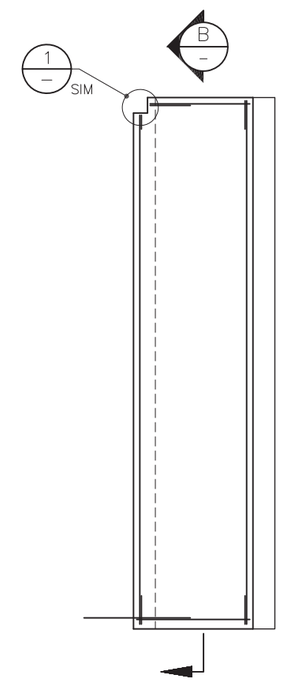

FRONT FACE

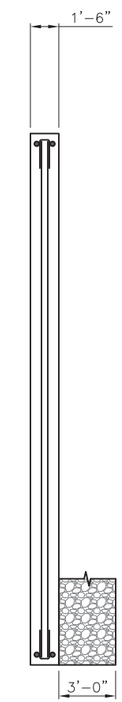

SECTION B / –

WING WALL 2

60% REVIEW
NOT FOR CONSTRUCTION

No.	Date	Revision	By	Appr.

HNTB
HNTB Corporation
600 108th Avenue NE
Suite 900
Bellevue, WA 98004
(425) 455-3555

Perteet Inc.
425-252-7700 | 1-800-615-9900
2707 Colby Avenue, Suite 900
Everett, Washington 98201

LYNNWOOD WASHINGTON

ELLION B. BRENDON — STATE OF WASHINGTON — 20347 — REGISTERED PROFESSIONAL ENGINEER

Drawn By TDS	Date 10/10/14	SCALE
Designed By EBB	10/10/14	Horiz N/A
Checked By KL	10/14/14	Vert N/A
Approved By		Project Number 20100156

CITY OF LYNNWOOD
POPLAR WAY EXTENSION BRIDGE PHASE 1
PIER 1 WALLS

Drawing No. BR11
Sheet No. 10 of Total 48

C.S. 3120 ~ PROJ. NO. TA2797 ~ NORTHWEST REGION ~ I-5 ~ MP 181.62 ~ CITY OF LYNNWOOD ~ POPLAR WAY EXTENSION BRIDGE

Oct 22, 2014 • 1:04pm rschiffert J:\60024\CADD\DS001\Drawings\STRUC\20100156_BR11.dwg Layout Name: Pier 1 Walls

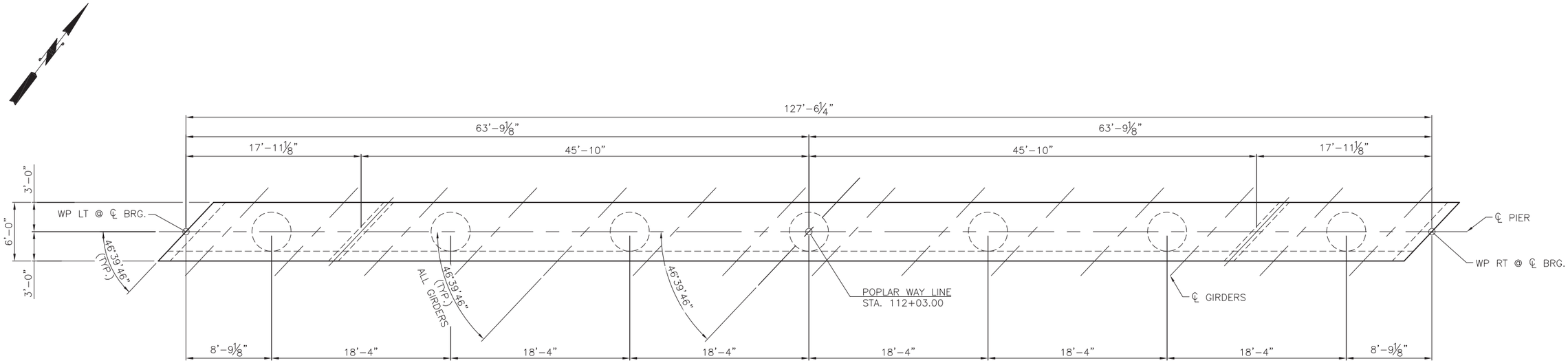

PIER 2 - PLAN

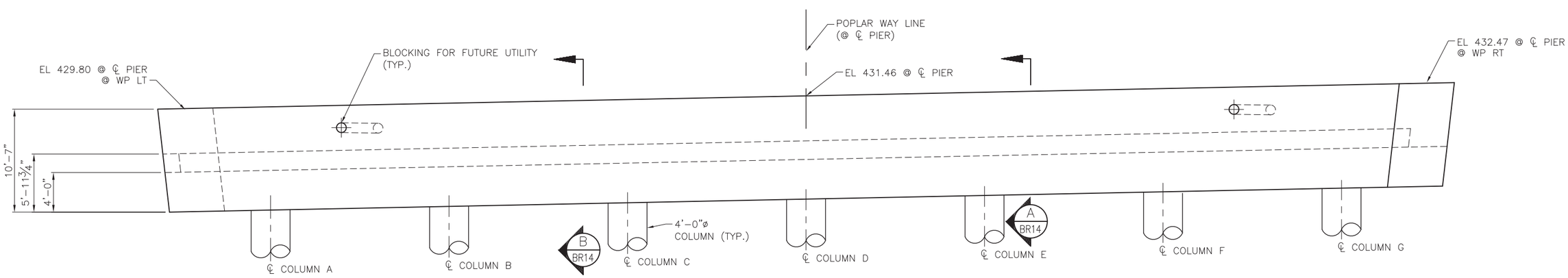

PIER 2 - ELEVATION

ELEVATION SHOWN LOOKING UP STATION

60% REVIEW

NOT FOR CONSTRUCTION

No.	Date	Revision	By	Appr.

HNTB
HNTB Corporation
600 108th Avenue NE
Suite 900
Bellevue, WA 98004
(425) 455-3555

Perteet Inc.
425-252-7700 | 1-800-615-9900
2707 Colby Avenue, Suite 900
Everett, Washington 98201

LYNNWOOD WASHINGTON

ELLEN B. BRENDEN
STATE OF WASHINGTON
25347
REGISTERED PROFESSIONAL ENGINEER

Drawn By	TDS	Date 10/10/14
Designed By	EBB	10/10/14
Checked By	KL	10/14/14
Approved By		

SCALE
Horiz N/A
Vert N/A
Project Number 20100156

CITY OF LYNNWOOD
POPLAR WAY EXTENSION BRIDGE PHASE 1
PIER 2 PLAN & ELEVATIONS

Drawing No. BR13
Sheet No. 11 of Total 48

Oct 22, 2014 - 1:07pm rschiffert J:\60024\CADD\DS001\Drawings\STRUC\20100156_BR13.dwg Layout Name: Piers 2 Plan & Elevations

C.S 3120 ~ PROJ. NO. TA2797 ~ NORTHWEST REGION ~ I-5 ~ MP 181.62 ~ CITY OF LYNNWOOD ~ POPLAR WAY EXTENSION BRIDGE

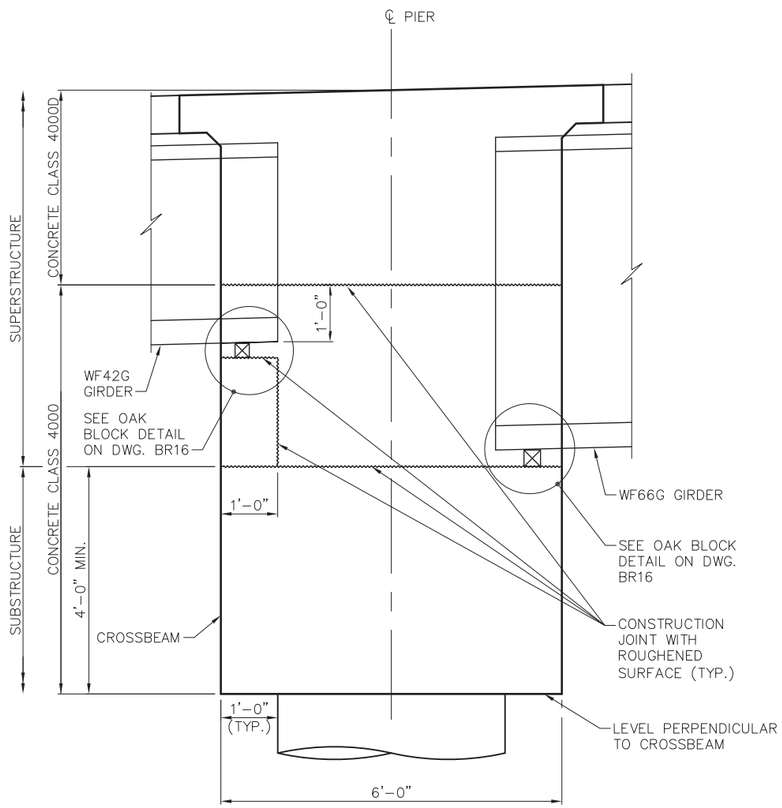

PIER 2 GEOMETRY

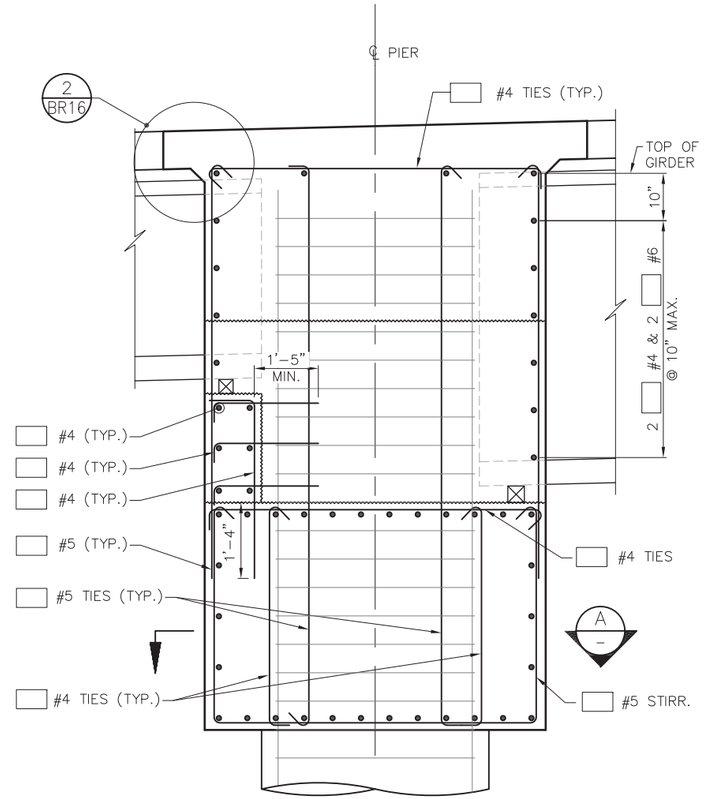

SECTION A BR13

TYPICAL AT COLUMN

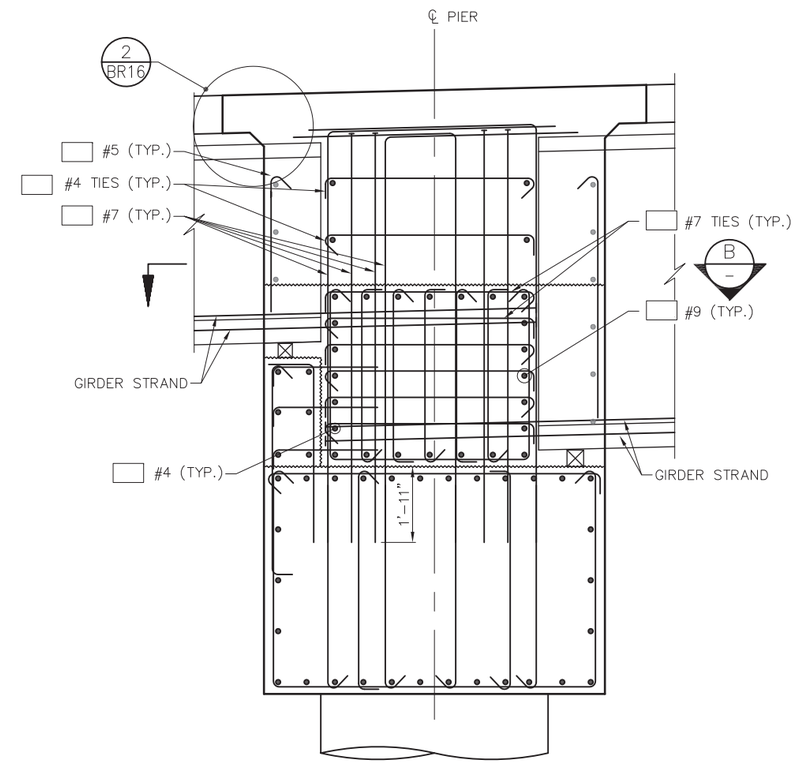

SECTION B BR13

TYPICAL AT GIRDER

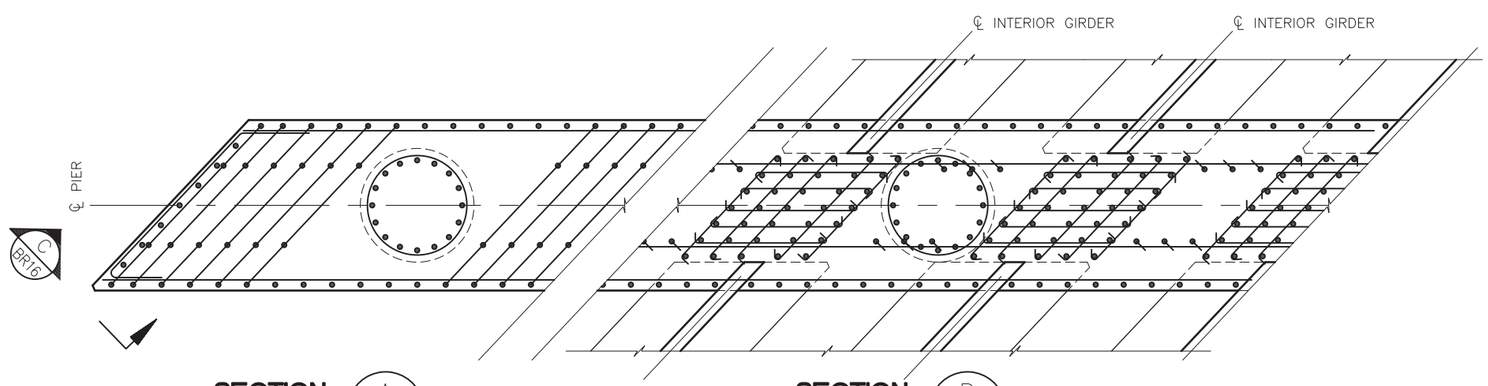

SECTION A

SECTION B

NOTES:

1. FOR ELEVATION VIEW, DETAILS AND NOTES, SEE BR16.
2. DECK REINFORCEMENT NOT SHOWN.

60% REVIEW
NOT FOR CONSTRUCTION

No.	Date	Revision	By	Appr.

HNTB
HNTB Corporation
600 108th Avenue NE
Suite 900
Bellevue, WA 98004
(425) 455-3555

Perteet Inc.
425-252-7700 | 1-800-615-9900
2707 Colby Avenue, Suite 900
Everett, Washington 98201

LYNNWOOD WASHINGTON

ELLEN B. BRENDEN
STATE OF WASHINGTON
25347
REGISTERED PROFESSIONAL ENGINEER

Drawn By	TDS	Date 10/10/14
Designed By	EBB	10/10/14
Checked By	KL	10/14/14
Approved By		

SCALE
Horiz N/A
Vert N/A
Project Number 20100156

CITY OF LYNNWOOD
POPLAR WAY EXTENSION BRIDGE PHASE 1
PIER 2 SECTIONS

Drawing No. BR14
Sheet No. 12 / 48 of Total

Oct 22, 2014 - 3:33pm tseverson J:\60024\CADD\DS001\Drawings\STRUC\20100156_BR14.dwg Layout Name: .Pier 2 Sections

C.S 3120 ~ PROJ. NO. TA2797 ~ NORTHWEST REGION ~ I-5 ~ MP 181.62 ~ CITY OF LYNNWOOD ~ POPLAR WAY EXTENSION BRIDGE

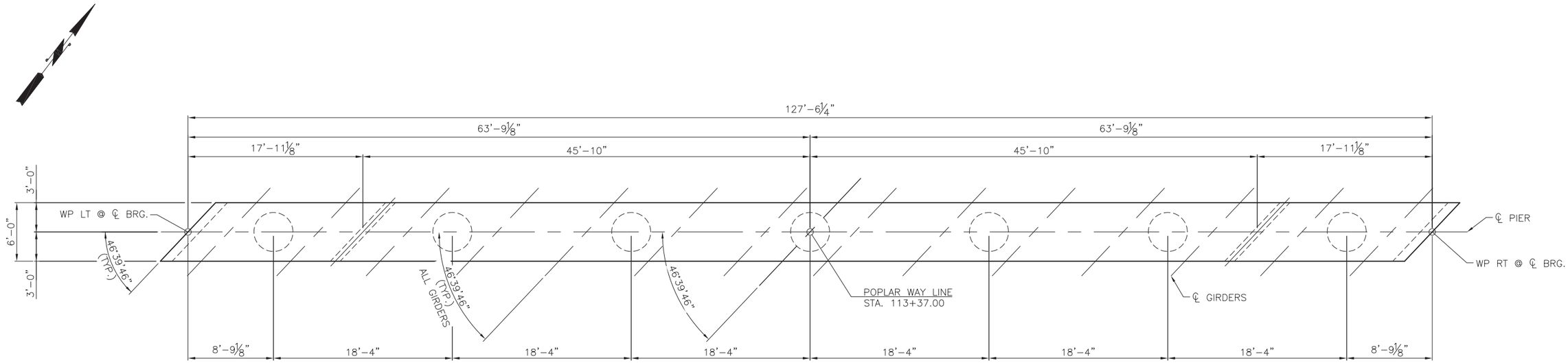

PIER 3 - PLAN

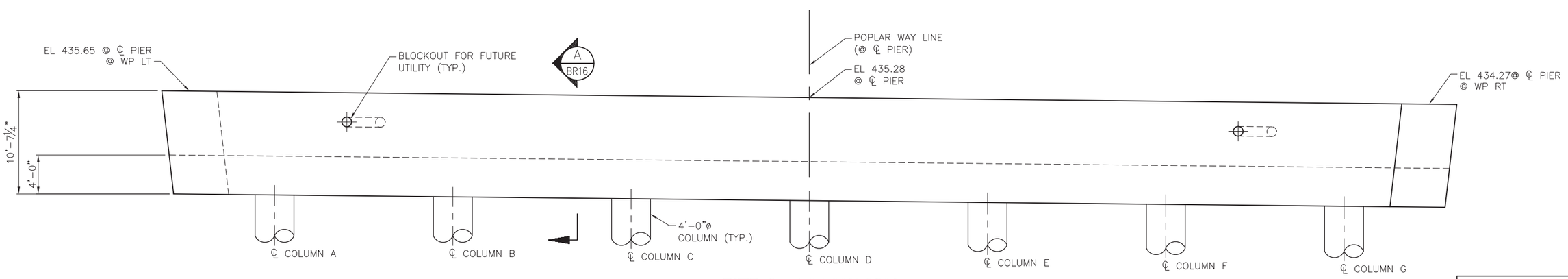

PIER 3 - ELEVATION

ELEVATION SHOWN LOOKING UP STATION

60% REVIEW
NOT FOR CONSTRUCTION

No.	Date	Revision	By	Appr.

HNTB
HNTB Corporation
600 108th Avenue NE
Suite 900
Bellevue, WA 98004
(425) 455-3555

Perteet Inc.
425-252-7700 | 1-800-615-9900
2707 Colby Avenue, Suite 900
Everett, Washington 98201

LYNNWOOD WASHINGTON

ELLEN B. BRENDEN
STATE OF WASHINGTON
25347
REGISTERED PROFESSIONAL ENGINEER

Drawn By	TDS	Date 10/10/14
Designed By	EBB	10/10/14
Checked By	KL	10/14/14
Approved By		

SCALE
Horiz N/A
Vert N/A
Project Number 20100156

CITY OF LYNNWOOD
POPLAR WAY EXTENSION BRIDGE PHASE 1
PIER 3 PLAN & ELEVATION

Drawing No. BR15
Sheet No. 13 / 48 of Total

Oct 22, 2014 - 12:56pm rschifferl J:\60024\CADD\DS001\Drawings\STRUC\20100156_BR15.dwg Layout Name: Pier 3 Plan & Elevation

C.S 3120 ~ PROJ. NO. TA2797 ~ NORTHWEST REGION ~ I-5 ~ MP 181.62 ~ CITY OF LYNNWOOD ~ POPLAR WAY EXTENSION BRIDGE

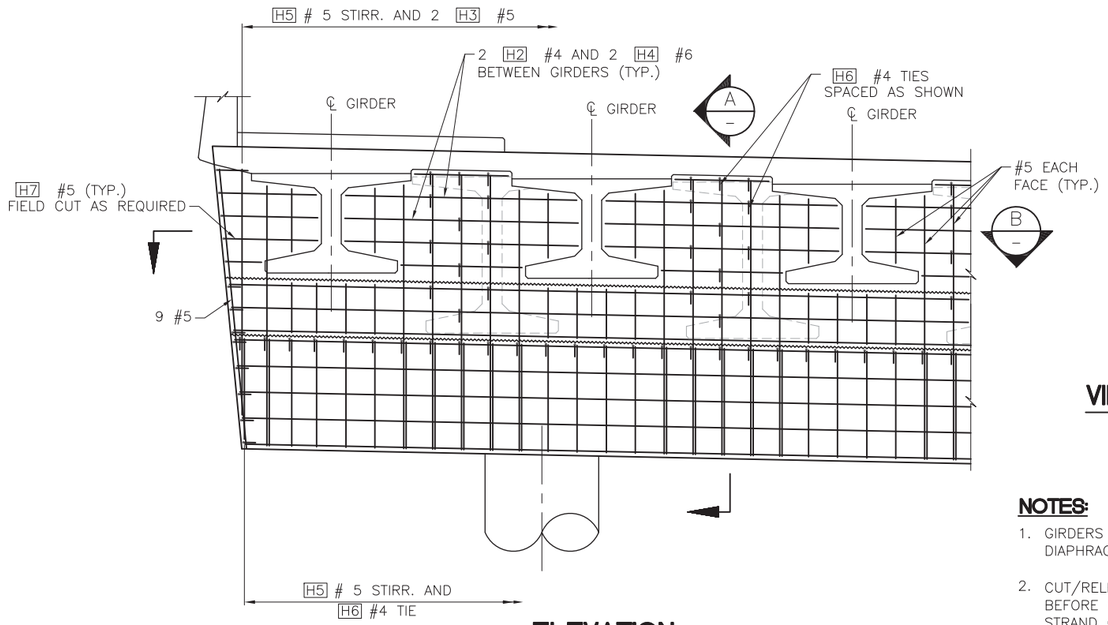

ELEVATION

(PIER 3 SHOWN, PIERS 2 & 4 SIM.)

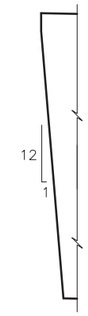

VIEW C

BR14, BR15

NOTES:

1. GIRDERS SHALL BE HELD RIGIDLY IN PLACE WHEN DIAPHRAGMS ARE PLACED.
2. CUT/RELEASE GIRDER TEMPORARY STRANDS BEFORE CASTING DIAPHRAGM. SEE TEMPORARY STRAND CUTTING SEQUENCE.
3. EXTENDED STRANDS AND GIRDER REINFORCING NOT SHOWN FOR CLARITY.
4. LONGITUDINAL DIMENSIONS ARE NORMAL TO SKEW.
5. FOR CONCRETE PLACEMENT PROCEDURE SEE "SUPERSTRUCTURE CONSTRUCTION SEQUENCE" SHEET.

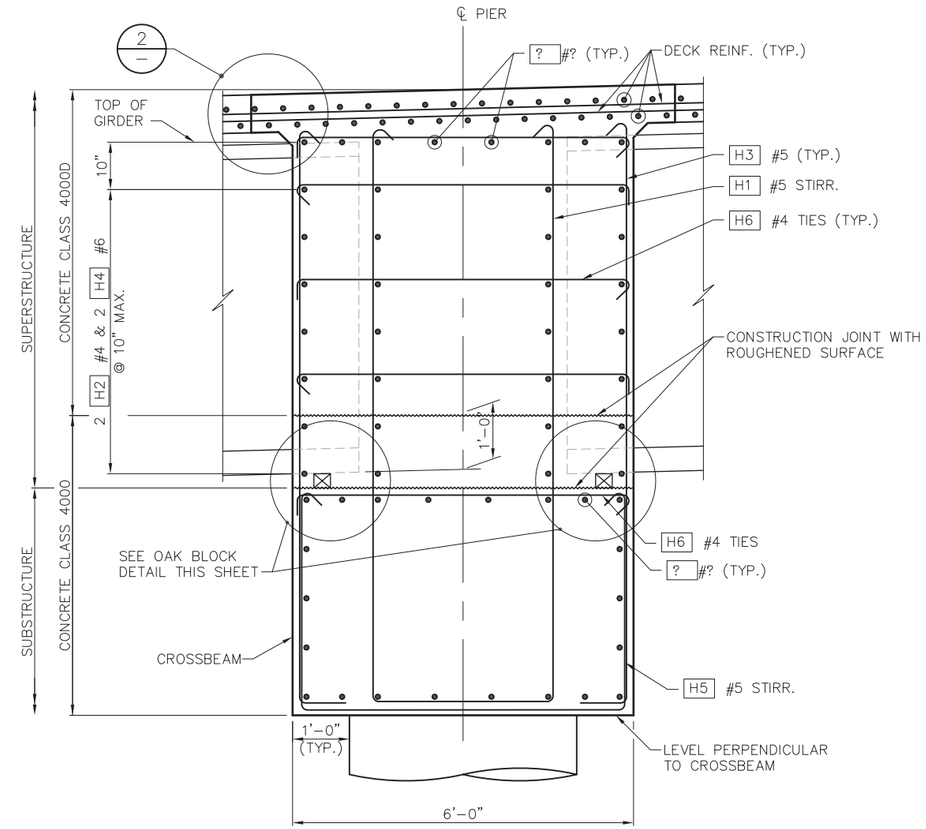

SECTION A

BR15

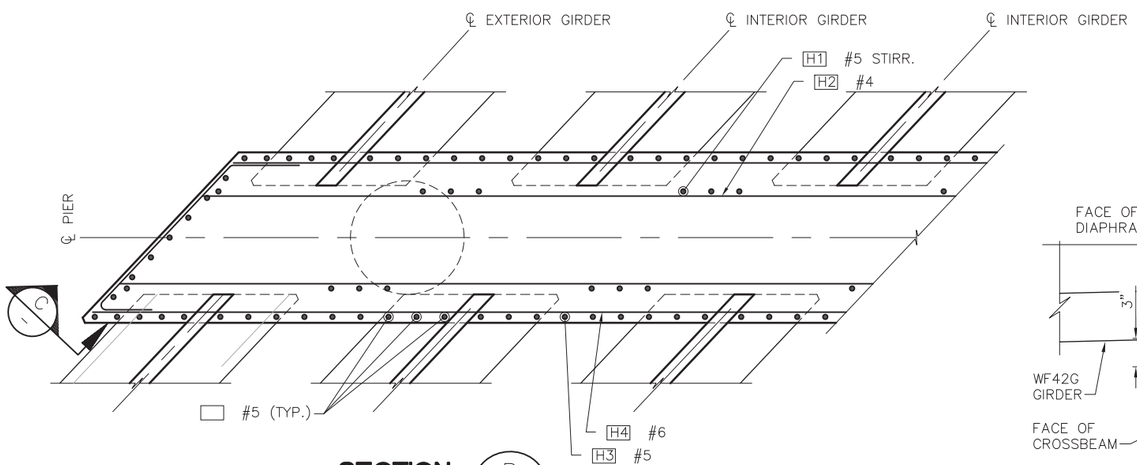

SECTION B

(PIER 3 ONLY)

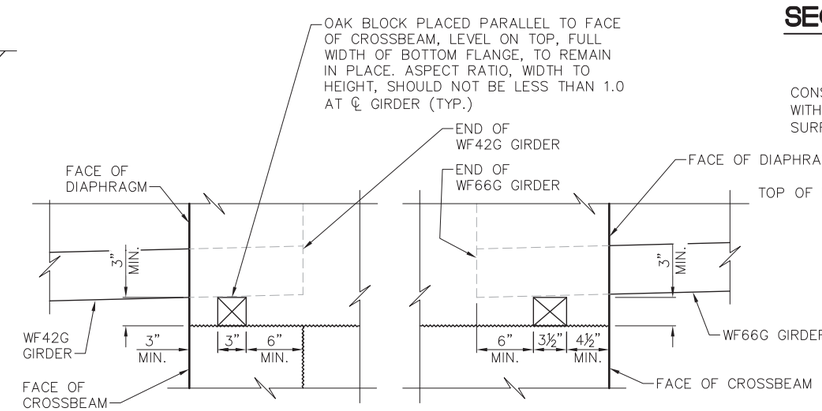

OAK BLOCK DETAIL 1

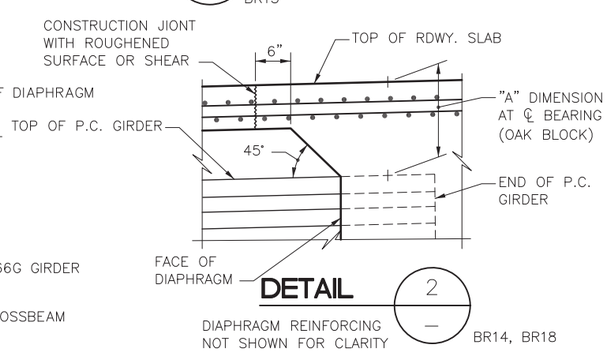

DETAIL 2

BR14, BR18

60% REVIEW

NOT FOR CONSTRUCTION

No.	Date	Revision	By	Appr.

HNTB
HNTB Corporation
600 108th Avenue NE
Suite 900
Bellevue, WA 98004
(425) 455-3555

Perteet Inc.
425-252-7700 | 1-800-615-9900
2707 Colby Avenue, Suite 900
Everett, Washington 98201

LYNNWOOD WASHINGTON

BILLON B. BRENDAN, STATE OF WASHINGTON, 25347, REGISTERED PROFESSIONAL ENGINEER

Drawn By TDS	Date 10/10/14	SCALE
Designed By EBB	10/10/14	Horiz N/A
Checked By KL	10/14/14	Vert N/A
Approved By		Project Number 20100156

CITY OF LYNNWOOD

POPLAR WAY EXTENSION BRIDGE PHASE 1

PIER 3 SECTIONS

Drawing No. BR16

Sheet No. 14 of Total 48

Oct 22, 2014 - 12:26pm rschilferd J:\60024\CADD\DS001\Drawings\STRUC\20100156_BR16.dwg Layout Name: -Pier 3 Sections

C.S. 3120 ~ PROJ. NO. TA2797 ~ NORTHWEST REGION ~ I-5 ~ MP 181.62 ~ CITY OF LYNNWOOD ~ POPLAR WAY EXTENSION BRIDGE

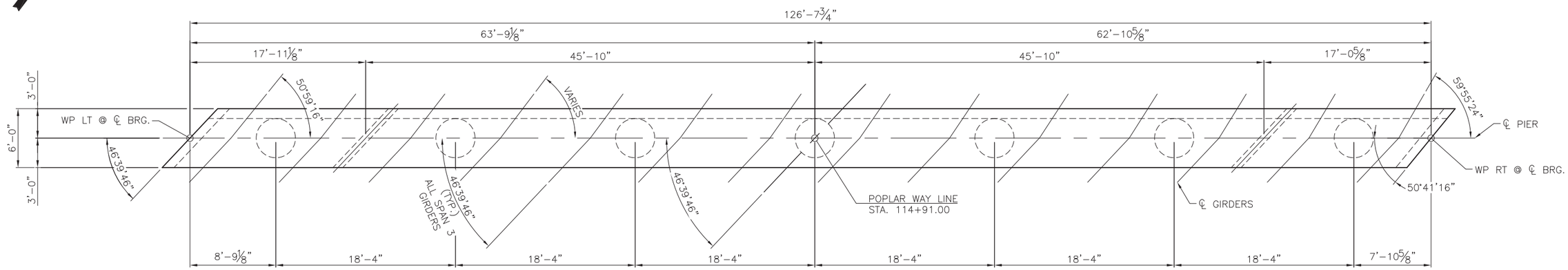

PIER 4 - PLAN

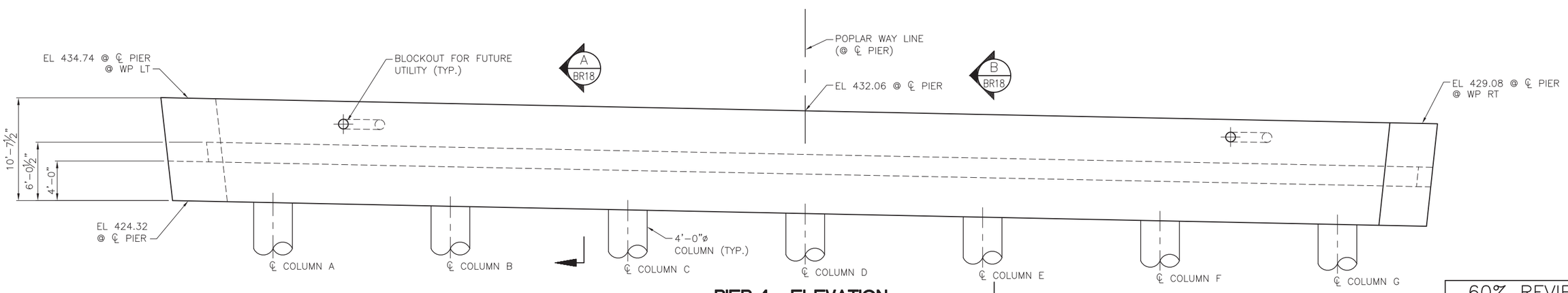

PIER 4 - ELEVATION

ELEVATION SHOWN LOOKING UP STATION

60% REVIEW

NOT FOR CONSTRUCTION

No.	Date	Revision	By	Appr.

HNTB
HNTB Corporation
600 108th Avenue NE
Suite 900
Bellevue, WA 98004
(425) 455-3555

Perteet Inc.
425-252-7700 | 1-800-615-9900
2707 Colby Avenue, Suite 900
Everett, Washington 98201

LYNNWOOD WASHINGTON

BILLION B. BRENDEN — STATE OF WASHINGTON — 25347 — REGISTERED PROFESSIONAL ENGINEER

Drawn By TDS	Date 10/10/14	SCALE	
Designed By EBB	10/10/14	Horiz N/A	
Checked By KL	10/14/14	Vert N/A	
Approved By		Project Number 20100156	

CITY OF LYNNWOOD

POPLAR WAY EXTENSION BRIDGE PHASE 1

PIER 4 PLAN & ELEVATION

Drawing No. BR17

Sheet No. 15 of Total 48

Oct 22, 2014 - 12:57pm rschiffert J:\60024\CADD\DS001\Drawings\STRUC\20100156_BR17.dwg Layout Name: Pier 4 Plan & Elevation

C.S 3120 ~ PROJ. NO. TA2797 ~ NORTHWEST REGION ~ I-5 ~ MP 181.62 ~ CITY OF LYNNWOOD ~ POPLAR WAY EXTENSION BRIDGE

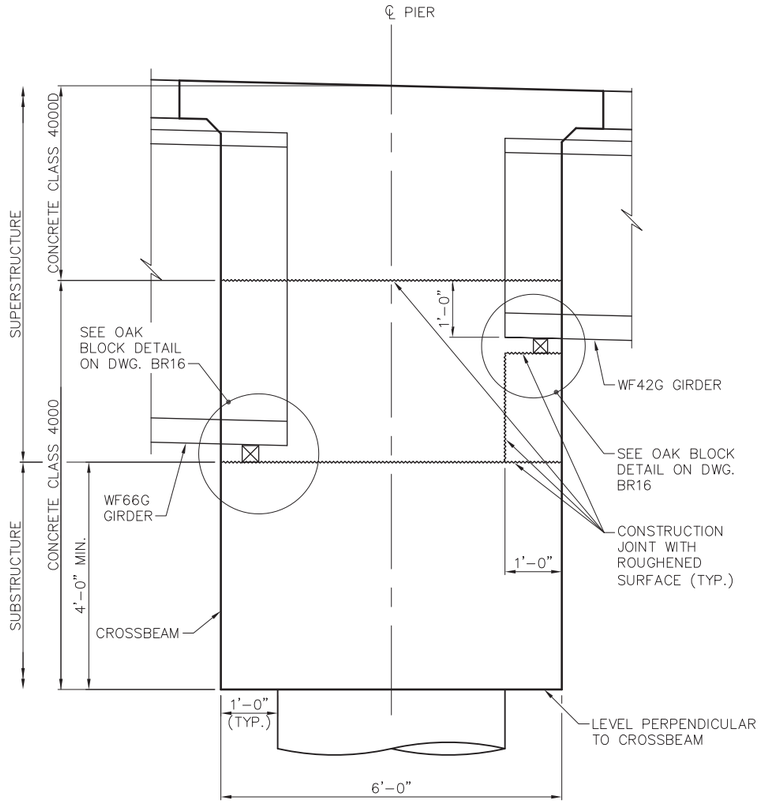

PIER 4 GEOMETRY

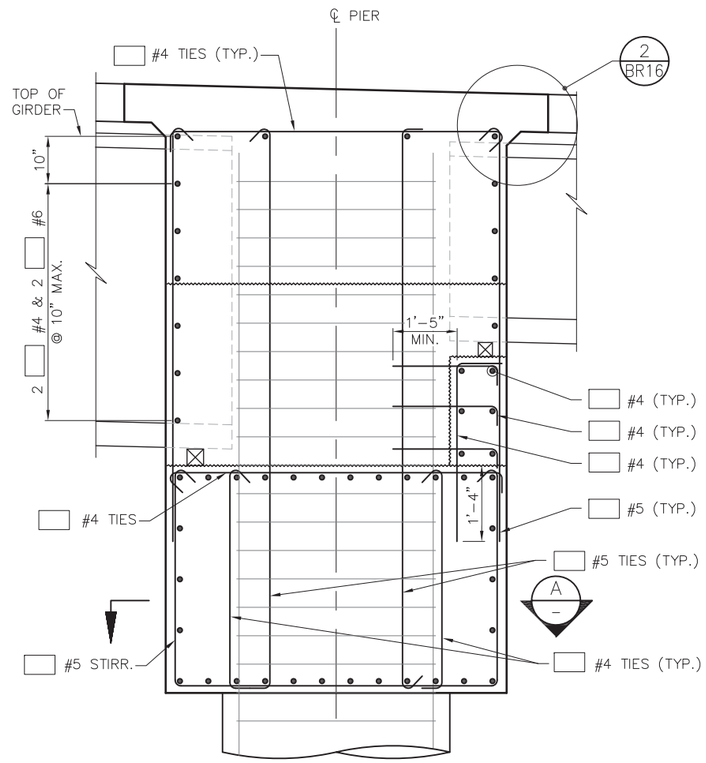

SECTION A BR17

TYPICAL AT COLUMN

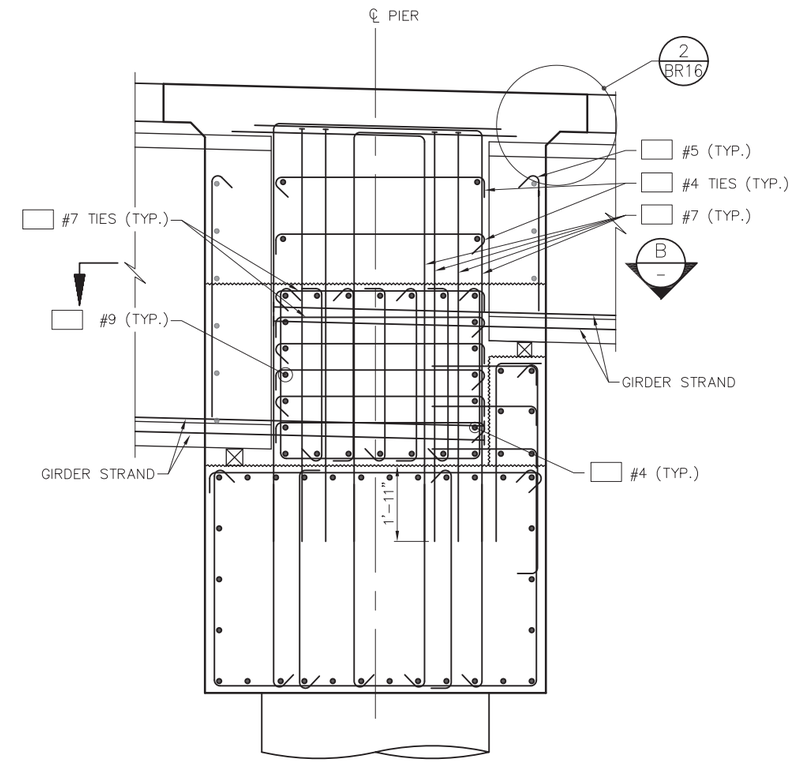

SECTION B BR17

TYPICAL AT GIRDER

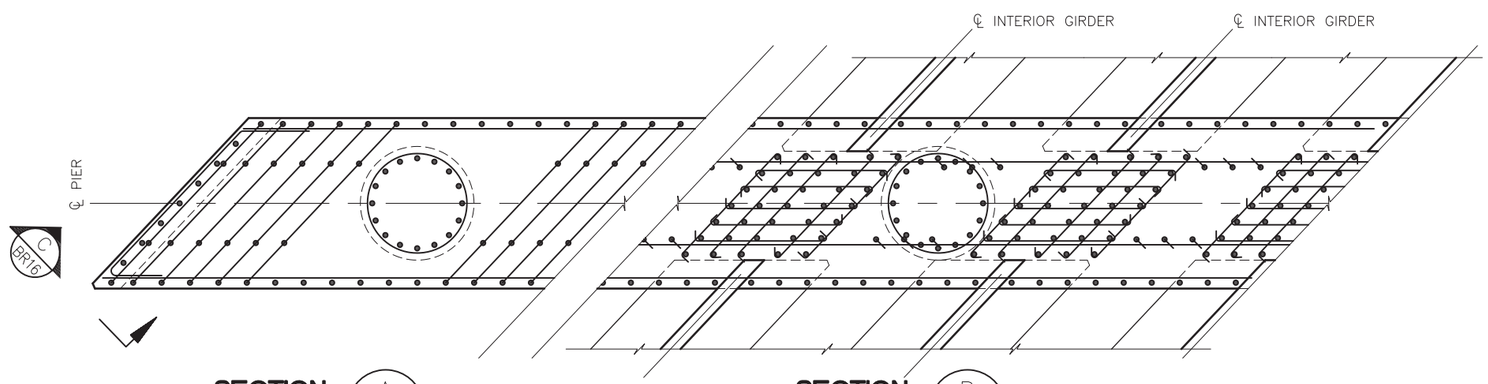

SECTION A

SECTION B

NOTES:

1. FOR ELEVATION VIEW, DETAILS AND NOTES, SEE BR16.
2. DECK REINFORCEMENT NOT SHOWN.

60% REVIEW
NOT FOR CONSTRUCTION

No.	Date	Revision	By	Appr.

HNTB
HNTB Corporation
600 108th Avenue NE
Suite 900
Bellevue, WA 98004
(425) 455-3555

Perteet Inc.
425-252-7700 | 1-800-615-9900
2707 Colby Avenue, Suite 900
Everett, Washington 98201

LYNNWOOD WASHINGTON

BILLION B. BRENDAN
STATE OF WASHINGTON
25347
REGISTERED PROFESSIONAL ENGINEER

Drawn By TDS	Date 10/10/14	SCALE
Designed By EBB	10/10/14	Horiz N/A
Checked By KL	10/14/14	Vert N/A
Approved By		Project Number 20100156

CITY OF LYNNWOOD
POPLAR WAY EXTENSION BRIDGE PHASE 1
PIER 4 SECTIONS

Drawing No. BR18
Sheet No. 16 of Total 48

Oct 22, 2014 - 3:32pm tseverson J:\60024\CADD\DS001\Drawings\STRUC\20100156_BR18.dwg Layout Name: -Pier 4 Sections
C.S. 3120 ~ PROJ. NO. TA2797 ~ NORTHWEST REGION ~ I-5 ~ MP 181.62 ~ CITY OF LYNNWOOD ~ POPLAR WAY EXTENSION BRIDGE

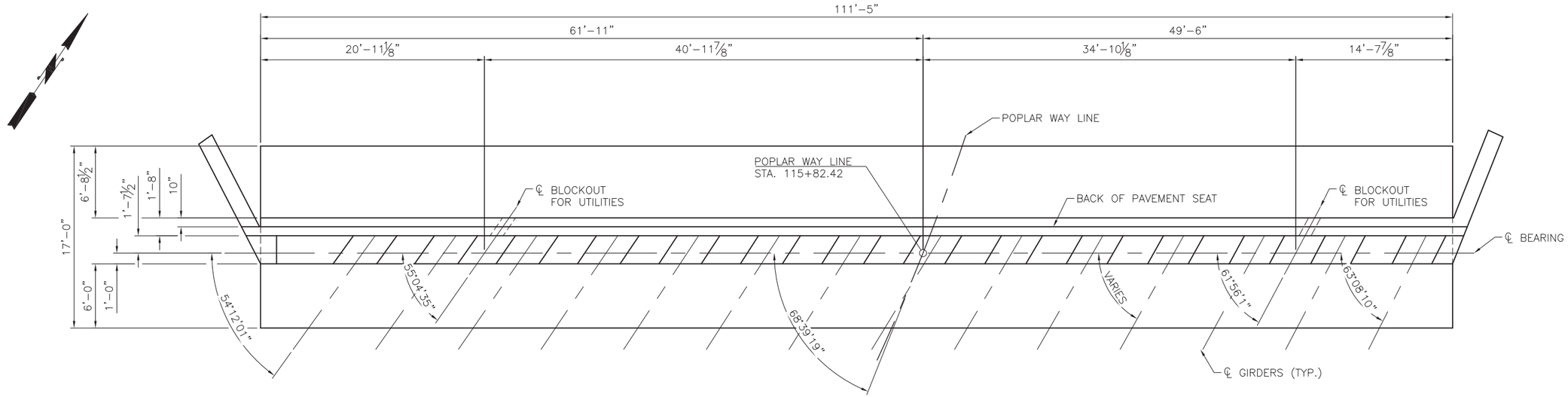

PIER 5 - PLAN

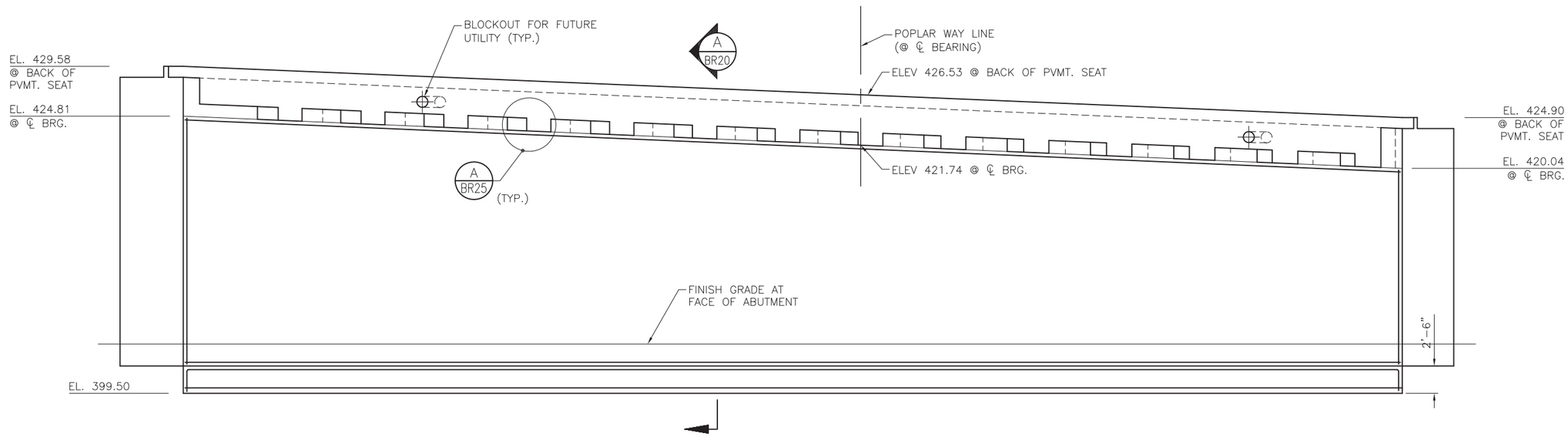

PIER 5 - ELEVATION

ELEVATION SHOWN LOOKING UP STATION

60% REVIEW

NOT FOR CONSTRUCTION

No.	Date	Revision	By	Appr.

HNTB
HNTB Corporation
600 108th Avenue NE
Suite 900
Bellevue, WA 98004
(425) 455-3555

Perteet Inc.
425-252-7700 | 1-800-615-9900
2707 Colby Avenue, Suite 900
Everett, Washington 98201

LYNNWOOD WASHINGTON

ELLEN B. BRENDEN
STATE OF WASHINGTON
25347
REGISTERED
PROFESSIONAL ENGINEER

Drawn By TDS	Date 10/10/14	SCALE
Designed By EBB	10/10/14	Horiz N/A
Checked By KL	10/14/14	Vert N/A
Approved By		Project Number 20100156

CITY OF LYNNWOOD

POPLAR WAY EXTENSION BRIDGE PHASE 1

PIER 5 PLAN & ELEVATION

Drawing No. BR19

Sheet No. 17 / 48 of Total

Oct 22, 2014 - 12:34pm rschiffert J:\60024\CADD\DS001\Drawings\STRUC\20100156_BR19.dwg Layout Name: .Pier 5 Plan and Elevation

C.S 3120 ~ PROJ. NO. TA2797 ~ NORTHWEST REGION ~ I-5 ~ MP 181.62 ~ CITY OF LYNNWOOD ~ POPLAR WAY EXTENSION BRIDGE

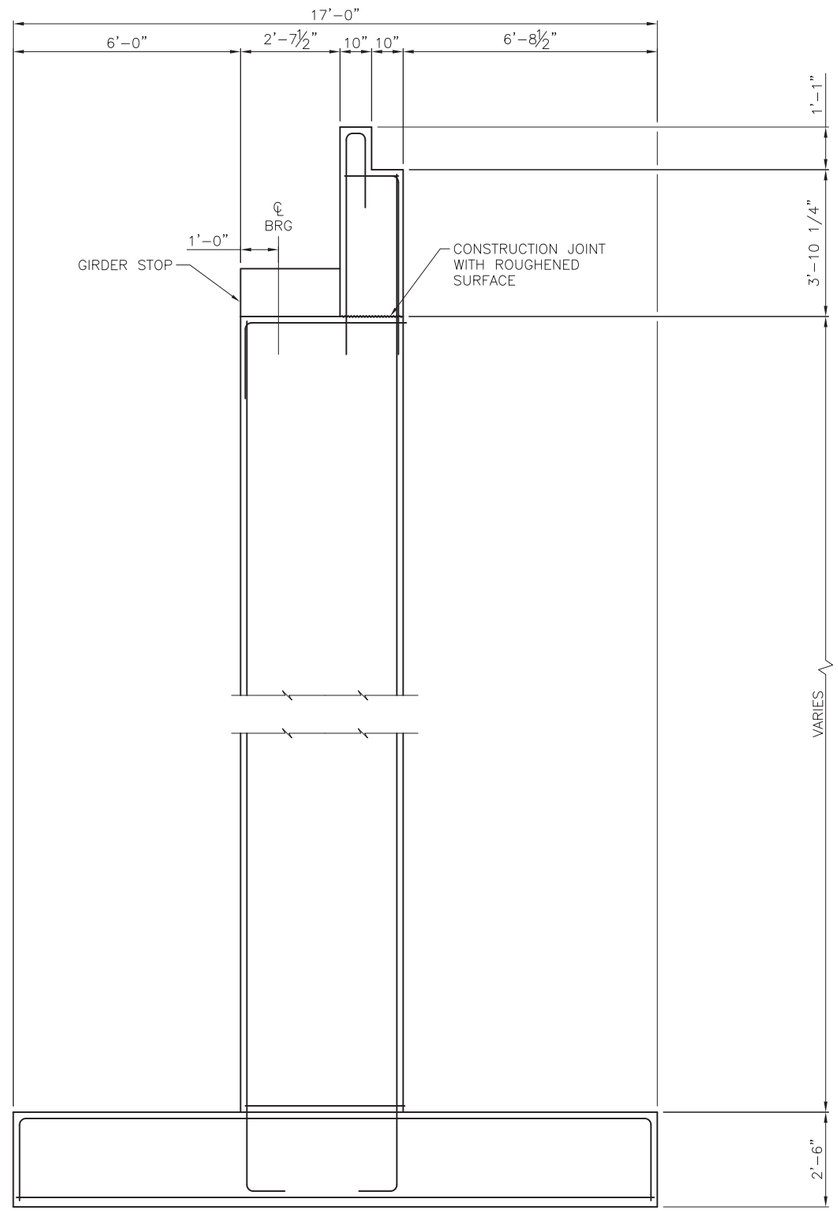

SECTION A / BR19

60% REVIEW
NOT FOR CONSTRUCTION

No.	Date	Revision	By	Appr.

HNTB
HNTB Corporation
600 108th Avenue NE
Suite 900
Bellevue, WA 98004
(425) 455-3555

Perteet Inc.
425-252-7700 | 1-800-615-9900
2707 Colby Avenue, Suite 900
Everett, Washington 98201

LYNNWOOD WASHINGTON

ELLION B. BRENDON
STATE OF WASHINGTON
20347
REGISTERED PROFESSIONAL ENGINEER

Drawn By	TDS	Date	10/10/14
Designed By	EBB		10/10/14
Checked By	KL		10/14/14
Approved By			

SCALE
Horiz N/A
Vert N/A
Project Number 20100156

CITY OF LYNNWOOD
POPLAR WAY EXTENSION BRIDGE PHASE 1
PIER 5 SECTIONS

Drawing No. BR20
Sheet No. 18 / 48 of Total

C.S 3120 ~ PROJ. NO. TA2797 ~ NORTHWEST REGION ~ I-5 ~ MP 181.62 ~ CITY OF LYNNWOOD ~ POPLAR WAY EXTENSION BRIDGE

Oct 22, 2014 • 12:54pm rschiffert J:\60024\CADD\DS001\Drawings\STRUC\20100156_BR20.dwg Layout Name: Pier 5 Sections

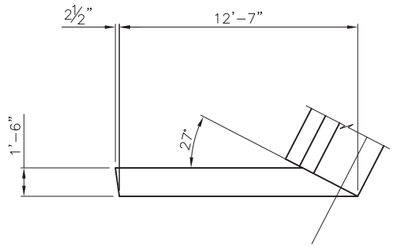

PLAN

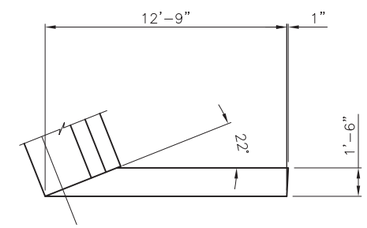

PLAN

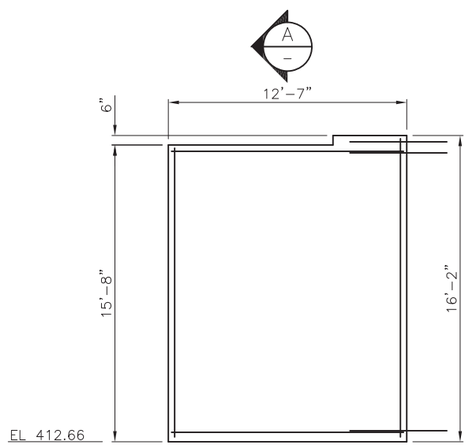

FRONT FACE

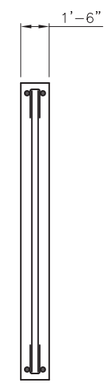

SECTION A

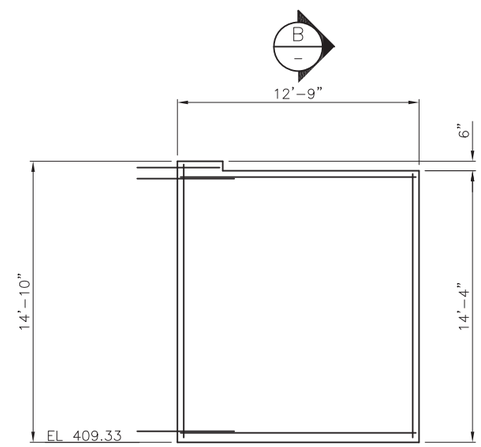

FRONT FACE

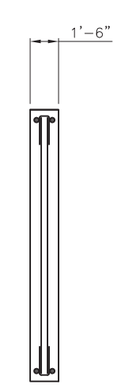

SECTION B

WALL 3

WALL 4

60% REVIEW
NOT FOR CONSTRUCTION

No.	Date	Revision	By	Appr.

HNTB
HNTB Corporation
600 108th Avenue NE
Suite 900
Bellevue, WA 98004
(425) 455-3555

Perteet Inc.
425-252-7700 I 1-800-615-9900
2707 Colby Avenue, Suite 900
Everett, Washington 98201

LYNNWOOD WASHINGTON

ELLEN B. BRENDEN
STATE OF WASHINGTON
25347
REGISTERED PROFESSIONAL ENGINEER

Drawn By TDS	Date 10/10/14	
Designed By EBB	10/10/14	
Checked By KL	10/14/14	
Approved By		

SCALE
Horiz N/A
Vert N/A
Project Number 20100156

CITY OF LYNNWOOD
POPLAR WAY EXTENSION BRIDGE PHASE 1
PIER 5 WALLS

Drawing No. BR21
Sheet No. 19 / 48 of Total

Oct 22, 2014 - 3:31pm tseverson J:\60024\CADD\DS001\Drawings\STRUC\20100156_BR21.dwg Layout Name: .Pier 5 Walls

C.S 3120 ~ PROJ. NO. TA2797 ~ NORTHWEST REGION ~ I-5 ~ MP 181.62 ~ CITY OF LYNNWOOD ~ POPLAR WAY EXTENSION BRIDGE

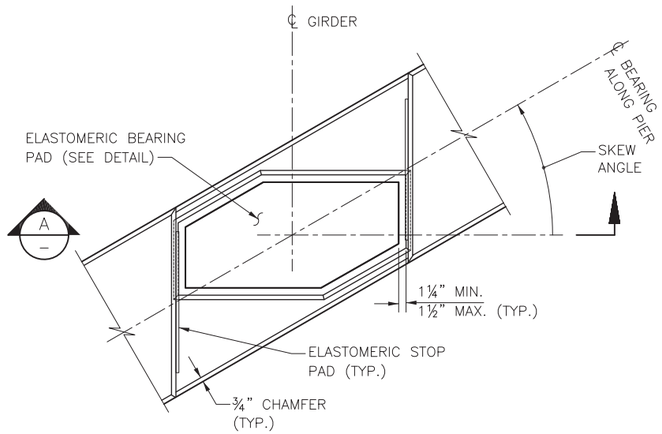

GROUT PAD DETAIL

GIRDER NOT SHOWN FOR CLARITY

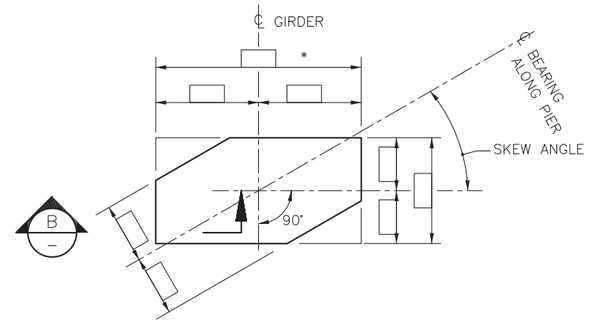

ELASTOMERIC BEARING PAD

LAMINATED ELASTOMERIC BEARING PAD
(SHIMS).

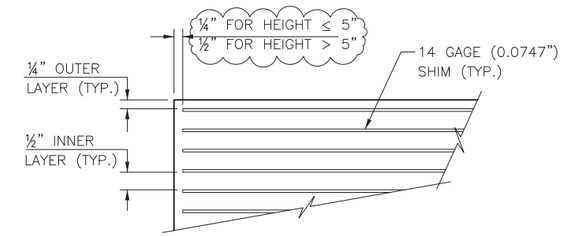

SECTION B
–

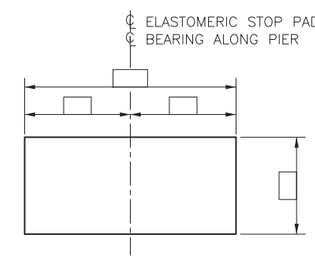

ELASTOMERIC STOP PAD

SHEAR MODULUS = 165 PSI

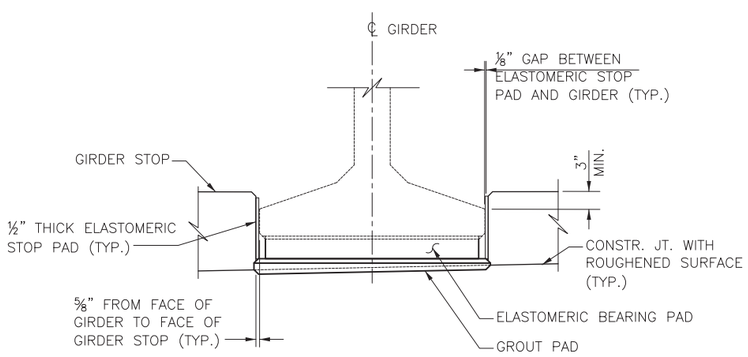

SECTION A
–

BR9, BR19

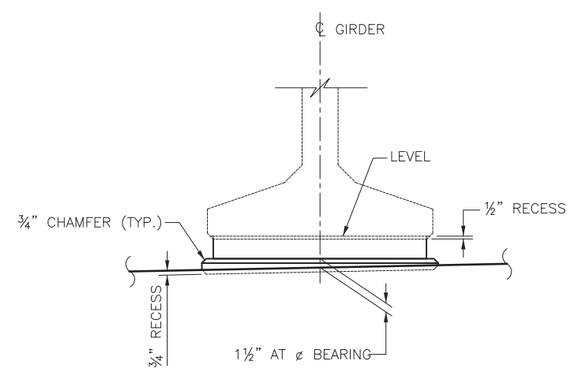

GROUT PAD ELEVATION

BEARING DESIGN TABLE AASHTO METHOD B DESIGN	
SERVICE – I LIMIT STATE	
DEAD LOAD (DL) REACTION	KIPS
LIVE LOAD REACTION (W/O IMPACT)	KIPS
UNLOADED HEIGHT	IN
LOADED HEIGHT (DL)	IN
SHEAR MODULUS	165 PSI

NOTES:

1. GIRDER STOPS SHALL BE CONSTRUCTED AFTER GIRDER PLACEMENT.
2. THE ELASTOMERIC STOP PADS SHALL BE CEMENTED TO GIRDER STOPS WITH APPROVED ADHESIVE.

WSDOT BRIDGE STANDARD DRAWING 5.6-A4-21 - TO BE REVISED FOR 90% SUBMITTAL

60% REVIEW
NOT FOR CONSTRUCTION

No.	Date	Revision	By	Appr.

HNTB
HNTB Corporation
600 108th Avenue NE
Suite 900
Bellevue, WA 98004
(425) 455-3555

Perteet Inc.
425-252-7700 I 1-800-615-9900
2707 Colby Avenue, Suite 900
Everett, Washington 98201

LYNNWOOD WASHINGTON

ELLION B. BRENDON
STATE OF WASHINGTON
25347
REGISTERED PROFESSIONAL ENGINEER

Drawn By	Date
TDS	10/10/14
Designed By	
EBB	10/10/14
Checked By	
KL	10/14/14
Approved By	

SCALE
Horiz N/A
Vert N/A
Project Number 20100156

CITY OF LYNNWOOD
POPLAR WAY EXTENSION BRIDGE PHASE 1
GIRDER BEARING DETAILS

Drawing No. BR25
Sheet No. 21 of Total 48

Oct 21, 2014 - 12:29pm rschiffert J:\60024\CADD\DS001\Drawings\STRUC\20100156_BR25.dwg Layout Name: Bearing Details
C.S 3120 ~ PROJ. NO. TA2797 ~ NORTHWEST REGION ~ I-5 ~ MP 181.62 ~ CITY OF LYNNWOOD ~ POPLAR WAY EXTENSION BRIDGE

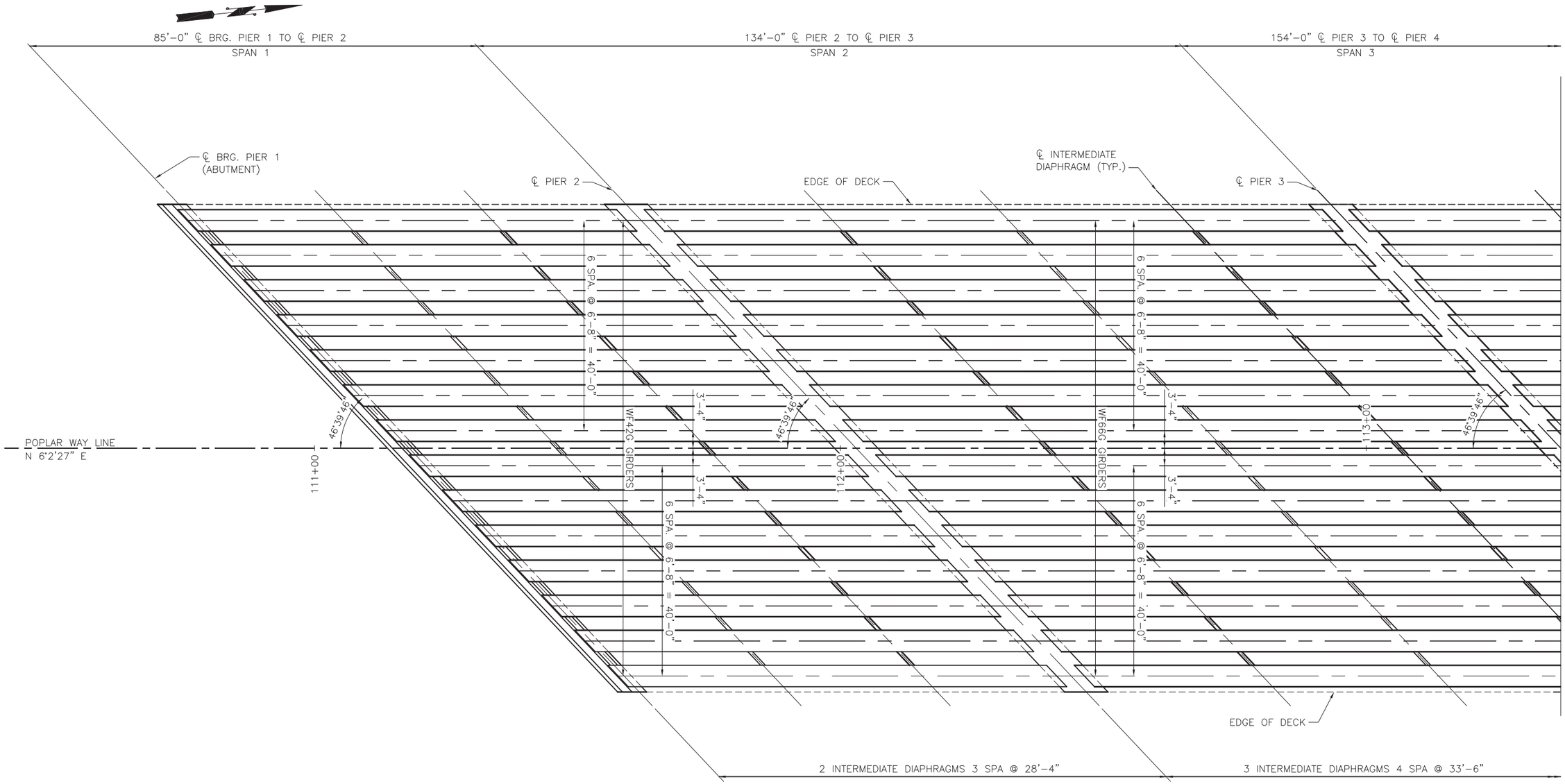

FRAMING PLAN

IS N 52°42'13" E

60% REVIEW
NOT FOR CONSTRUCTION

No.	Date	Revision	By	Appr.

HNTB
HNTB Corporation
600 108th Avenue NE
Suite 900
Bellevue, WA 98004
(425) 455-3555

Perteet Inc.
425-252-7700 | 1-800-615-9900
2707 Colby Avenue, Suite 900
Everett, Washington 98201

LYNNWOOD WASHINGTON

ELLION B. BRENDON
STATE OF WASHINGTON
25347
REGISTERED PROFESSIONAL ENGINEER

Drawn By TDS	Date 10/10/14	SCALE
Designed By EBB	10/10/14	Horiz N/A
Checked By KL	10/14/14	Vert N/A
Approved By		Project Number 20100156

CITY OF LYNNWOOD
POPLAR WAY EXTENSION BRIDGE PHASE 1
FRAMING PLAN 1 OF 2

Drawing No. BR26
Sheet No. 22 / 48 of Total

C.S 3120 ~ PROJ. NO. TA2797 ~ NORTHWEST REGION ~ I-5 ~ MP 181.62 ~ CITY OF LYNNWOOD ~ POPLAR WAY EXTENSION BRIDGE

Oct 21, 2014 - 1:37pm rscahffelt J:\60024\CADD\DS001\Drawings\STRUC\20100156_BR26.dwg Layout Name: Framing Plan 1

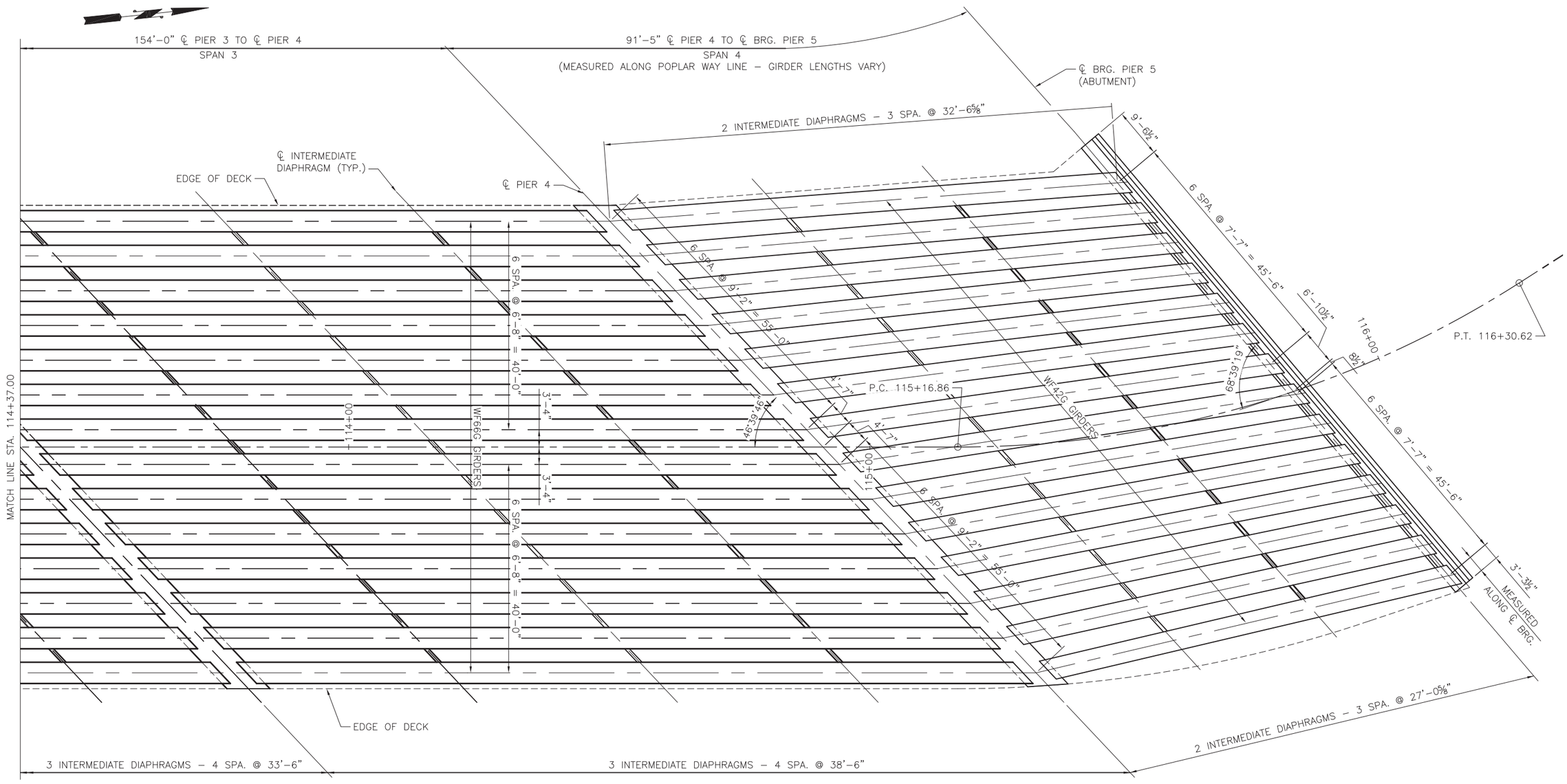

FRAMING PLAN

BEARING OF PIER 4 IS
N 52°42'13" E
BEARING OF PIER 5 IS
N 55°54'58" E

60% REVIEW
NOT FOR CONSTRUCTION

No.	Date	Revision	By	Appr.

HNTB
HNTB Corporation
600 108th Avenue NE
Suite 900
Bellevue, WA 98004
(425) 455-3555

Perteet Inc.
425-252-7700 | 1-800-615-9900
2707 Colby Avenue, Suite 900
Everett, Washington 98201

LYNNWOOD WASHINGTON

BILLON B. BRENDON
STATE OF WASHINGTON
25347
REGISTERED
PROFESSIONAL ENGINEER

Drawn By TDS	Date 10/10/14	SCALE
Designed By EBB	10/10/14	Horiz N/A
Checked By KL	10/14/14	Vert N/A
Approved By		Project Number 20100156

CITY OF LYNNWOOD
POPLAR WAY EXTENSION BRIDGE PHASE 1
FRAMING PLAN 2 OF 2

Drawing No. BR27
Sheet No. 23 / 48 of Total

Oct 22, 2014 - 12:28pm rschiffert J:\60024\CADD\DS001\Drawings\STRUC\20100156_BR27.dwg Layout Name: _Framing Plan 2
C.S. 3120 ~ PROJ. NO. TA2797 ~ NORTHWEST REGION ~ I-5 ~ MP 181.62 ~ CITY OF LYNNWOOD ~ POPLAR WAY EXTENSION BRIDGE

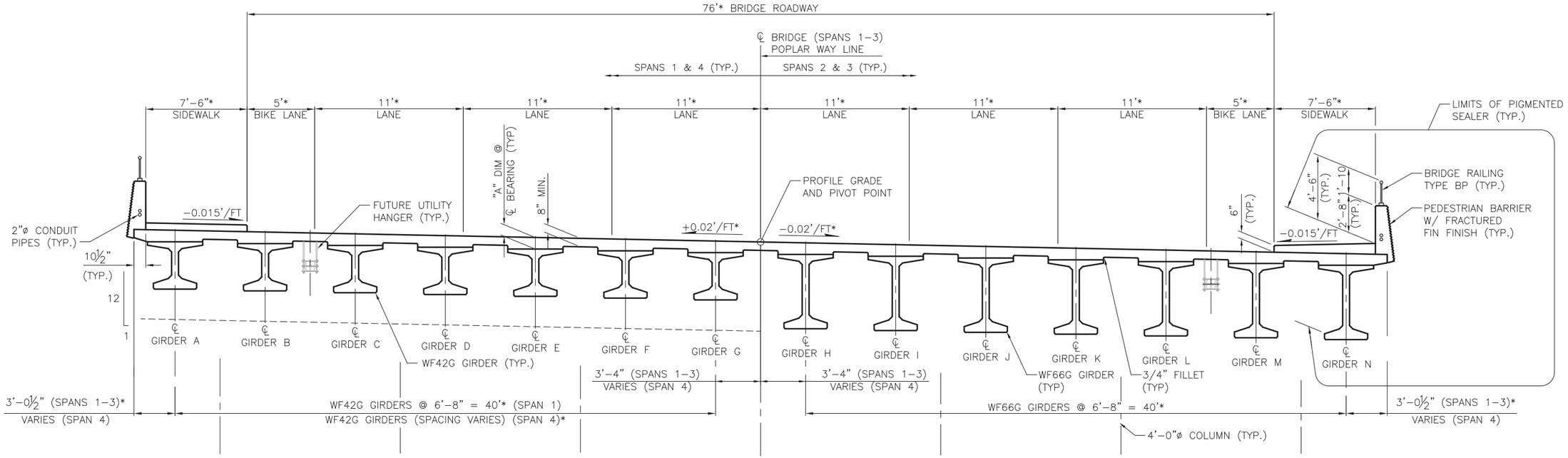

TYPICAL BRIDGE SECTION

SHOWN AT PIERS

* MEASURED PERPENDICULAR TO POPLAR WAY LINE

60% REVIEW

NOT FOR CONSTRUCTION

No.	Date	Revision	By	Appr.

HNTB
HNTB Corporation
600 108th Avenue NE
Suite 900
Bellevue, WA 98004
(425) 455–3555

Perteet Inc.
425-252-7700 | 1-800-615-9900
2707 Colby Avenue, Suite 900
Everett, Washington 98201

LYNNWOOD WASHINGTON

ELLEN B. BRENDEN
STATE OF WASHINGTON
25347
REGISTERED PROFESSIONAL ENGINEER

Drawn By TDS	Date 10/10/14	SCALE
Designed By EBB	10/10/14	Horiz N/A
Checked By KL	10/14/14	Vert N/A
Approved By		Project Number 20100156

CITY OF LYNNWOOD

POPLAR WAY EXTENSION BRIDGE PHASE 1

TYPICAL SECTION

Drawing No. BR28

Sheet No. 24 / 48 of Total

C.S 3120 ~ PROJ. NO. TA2797 ~ NORTHWEST REGION ~ I–5 ~ MP 181.62 ~ CITY OF LYNNWOOD ~ POPLAR WAY EXTENSION BRIDGE

Oct 22, 2014 - 7:25am rschiffert J:\60024\CADD\DS001\Drawings\STRUC\20100156_BR28.dwg Layout Name: Typical Section

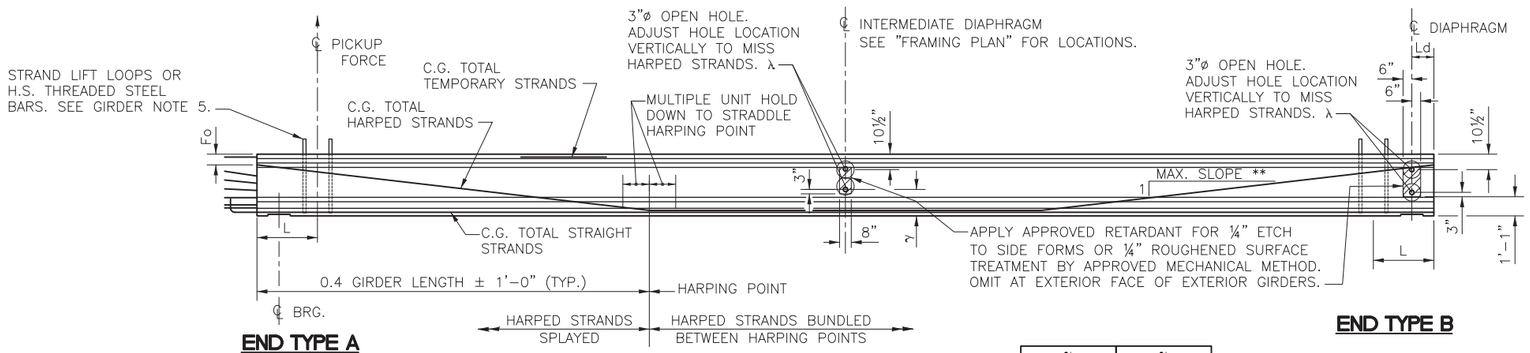

GIRDER ELEVATION

γ PARTIAL DEPTH INT. DIAPHRAGM	γ FULL DEPTH INT. DIAPHRAGM
1'-6"	1'-2⅛"

** 8 : 1 MAXIMUM SLOPE FOR EACH HARPED STRAND

λ SEE GIRDER NOTE 9.

END TYPE PROPERTIES

END TYPE	BEARING RECESS	X	Y	Z	SAWTEETH
A	YES	1'-10"ρ	1'-6"	9"	YES
B	YES	0"	0"	0"	NO
C	NO	1'-10"	1'-6"	9"	YES
D	NO	1'-10"	SEE "STRAND EXTENSION DETAIL"		YES

BAR END PLACEMENT FOR END TYPE C

ENDS AHEAD ON STATION	ENDS BACK ON STATION
G5 BARS LEFT OF ℄	G5 BARS RIGHT OF ℄
B1 = 0" (G4, G8)	B1 = 1½" (G4, G8)
B2 = 0" (G5)	B2 = 3" (G5)

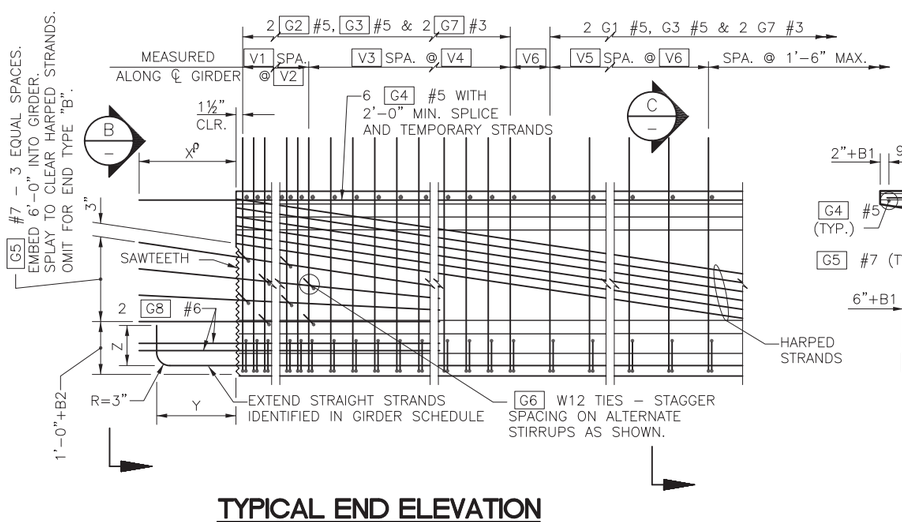

TYPICAL END ELEVATION

END TYPE C SHOWN, OTHER END TYPES SIMILAR.

ρ – X DIMENSION SHALL BE 1'-4" FOR G4 AT END TYPE A ONLY.

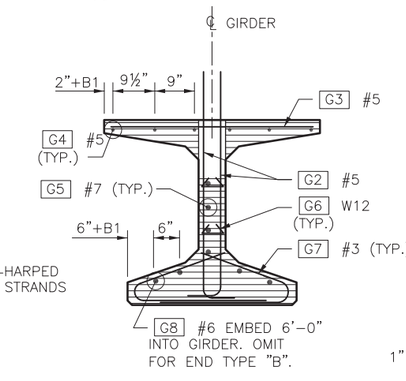

VIEW B

SAWTEETH SHOWN BY HATCHED AREA

STRANDS NOT SHOWN

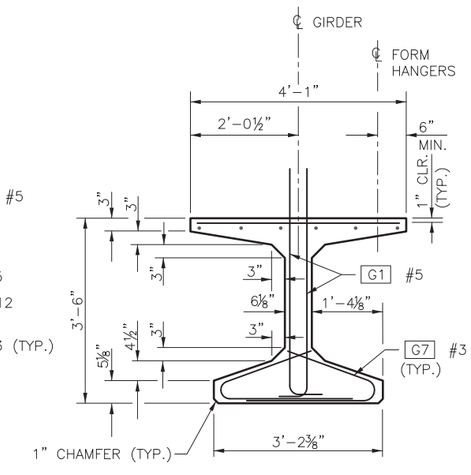

SECTION C

STRANDS NOT SHOWN

BENDING DIAGRAM (ALL DIMENSIONS ARE OUT TO OUT)

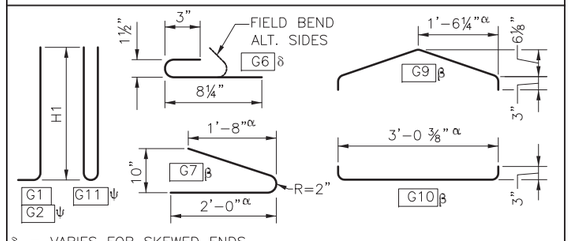

δ – VARIES FOR SKEWED ENDS.
α – #3 OR #4 MAY BE SUBSTITUTED. FIELD BENDING IS OPTIONAL.
β – PAIRS OF G7 BARS, OR G9 AND G10 BARS, MAY BE USED INTERCHANGEABLY AS BOTTOM FLANGE TIES.
ψ – 1 G11 MAY BE SUBSTITUTED FOR 2 G2 WITHIN THE V1 SPA. @ V2

60% REVIEW

NOT FOR CONSTRUCTION

WSDOT BRIDGE STANDARD DRAWING 5.6-A4-3 - TO BE REVISED FOR 90% SUBMITTAL

No.	Date	Revision	By	Appr.

HNTB
HNTB Corporation
600 108th Avenue NE
Suite 900
Bellevue, WA 98004
(425) 455-3555

Perteet Inc.
425-252-7700 | 1-800-615-9900
2707 Colby Avenue, Suite 900
Everett, Washington 98201

LYNNWOOD WASHINGTON

BALDIN B. BRENDEN STATE OF WASHINGTON 25347 REGISTERED PROFESSIONAL ENGINEER

Drawn By TDS	Date 10/10/14	SCALE Horiz N/A	CITY OF LYNNWOOD
Designed By EBB	10/10/14	Vert N/A	POPLAR WAY EXTENSION BRIDGE PHASE 1
Checked By KL	10/14/14	Project Number 20100156	WF42G GIRDER DETAILS 1 OF 3
Approved By			

Drawing No. BR29
Sheet No. 25 of Total 48

Oct 21, 2014 - 12:39pm rschiffler1 J:\60024\CADD\DS001\Drawings\STRUC\20100156_BR29.dwg Layout Name: WF42G Girder Elevation
C.S. 3120 ~ PROJ. NO. TA2797 ~ NORTHWEST REGION ~ I-5 ~ MP 181.62 ~ CITY OF LYNNWOOD ~ POPLAR WAY EXTENSION BRIDGE

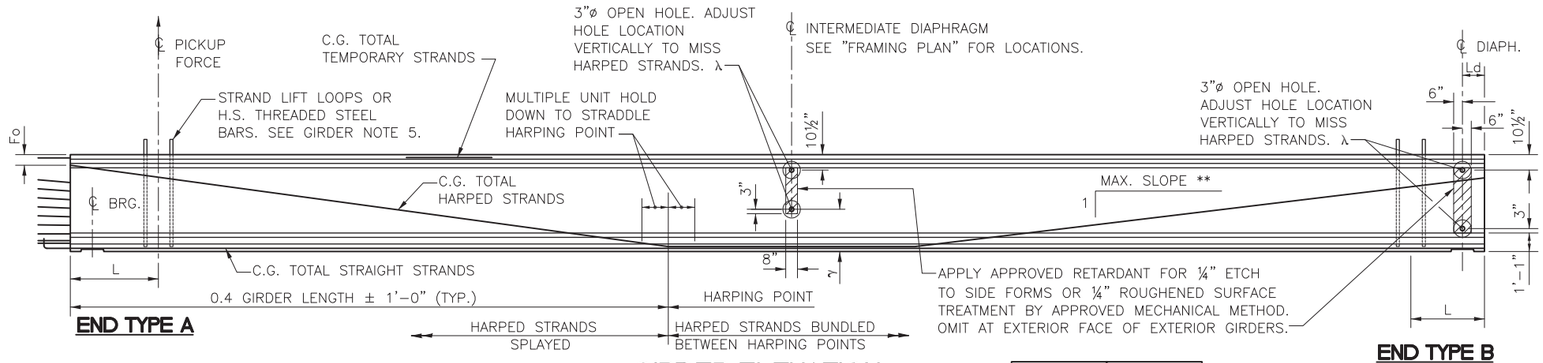

GIRDER ELEVATION

γ PARTIAL DEPTH INT. DIAPHRAGM	γ FULL DEPTH INT. DIAPHRAGM
2'-4 3/4"	1'-2 1/8"

** 8 : 1 MAXIMUM SLOPE FOR EACH HARPED STRAND

λ SEE GIRDER NOTE 9.

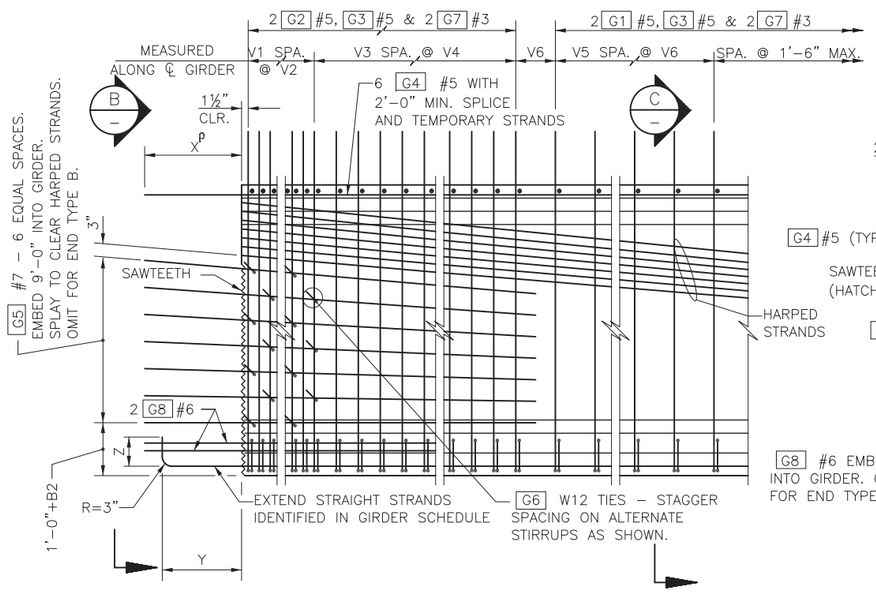

TYPICAL END ELEVATION

END TYPE C SHOWN, OTHER END TYPES SIMILAR.

ρ – X DIMENSION SHALL BE 1'-4" FOR G4 AT END TYPE A ONLY.

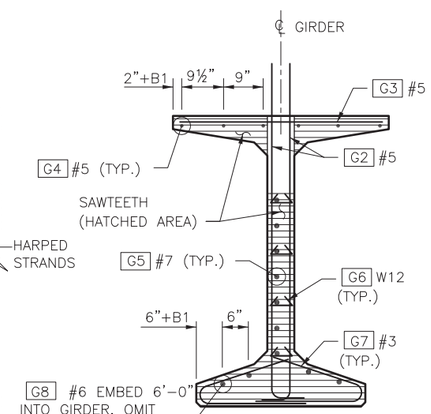

VIEW B

STRANDS NOT SHOWN

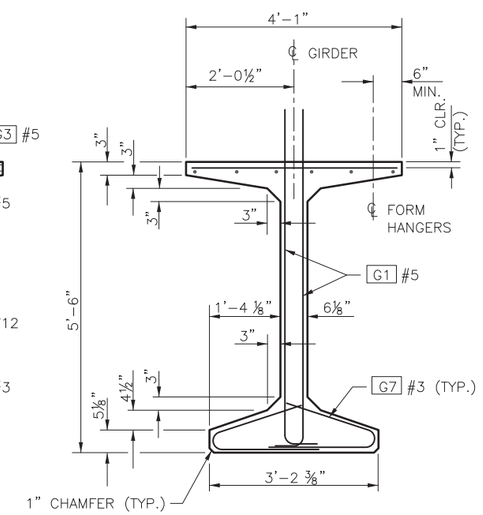

SECTION C

STRANDS NOT SHOWN

END TYPE PROPERTIES

END TYPE	BEARING RECESS	X	Y	Z	SAWTEETH
A	YES	1'-10"ρ	1'-6"	9"	YES
B	YES	0"	0"	0"	NO
C	NO	1'-10"	1'-6"	9"	YES
D	NO	1'-10"	SEE "STRAND EXTENSION DETAIL"		YES

BAR END PLACEMENT FOR END TYPE C

ENDS AHEAD ON STATION	ENDS BACK ON STATION
G5 BARS LEFT OF ℄	G5 BARS RIGHT OF ℄
B1 = 0" (G4, G8)	B1 = 1½" (G4, G8)
B2 = 0" (G5)	B2 = 3" (G5)

BENDING DIAGRAM (ALL DIMENSIONS ARE OUT TO OUT)

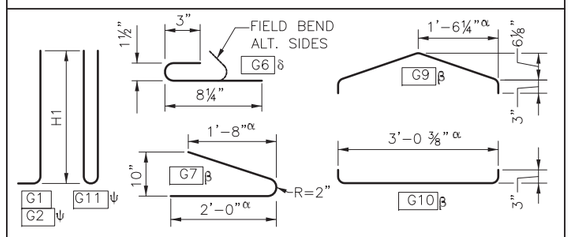

δ – VARIES FOR SKEWED ENDS.
α – #3 OR #4 MAY BE SUBSTITUTED. FIELD BENDING IS OPTIONAL.
β – PAIRS OF G7 BARS, OR G9 AND G10 BARS, MAY BE USED INTERCHANGEABLY AS BOTTOM FLANGE TIES.
ψ – 1 G11 MAY BE SUBSTITUTED FOR 2 G2 WITHIN THE V1 SPA. @ V2.

60% REVIEW
NOT FOR CONSTRUCTION

WSDOT BRIDGE STANDARD DRAWING 5.6-A4-6 - TO BE REVISED FOR 90% SUBMITTAL

No.	Date	Revision	By	Appr.

HNTB
HNTB Corporation
600 108th Avenue NE
Suite 900
Bellevue, WA 98004
(425) 455-3555

Perteet Inc.
425-252-7700 | 1-800-615-9900
2707 Colby Avenue, Suite 900
Everett, Washington 98201

LYNNWOOD WASHINGTON

BALLAN B. BRENDON STATE OF WASHINGTON 25347 REGISTERED PROFESSIONAL ENGINEER

Drawn By TDS	Date 10/10/14	SCALE
Designed By EBB	10/10/14	Horiz N/A
Checked By KL	10/14/14	Vert N/A
Approved By		Project Number 20100156

CITY OF LYNNWOOD
POPLAR WAY EXTENSION BRIDGE PHASE 1
WF66G GIRDER DETAILS 1 OF 3

Drawing No. BR30
Sheet No. 26 of Total 48

Oct 21, 2014 - 12:31pm rschiffert J:\60024\CADD\DS001\Drawings\STRUC\20100156_BR30.dwg Layout Name: WF42G Girder Details
C.S. 3120 ~ PROJ. NO. TA2797 ~ NORTHWEST REGION ~ I-5 ~ MP 181.62 ~ CITY OF LYNNWOOD ~ POPLAR WAY EXTENSION BRIDGE

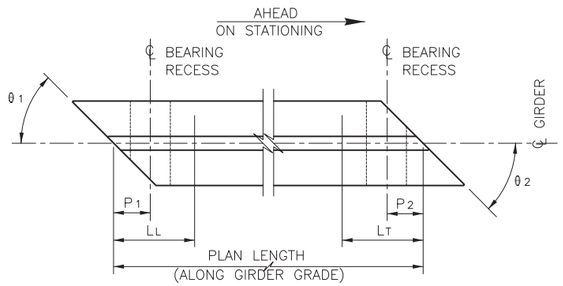

END 1 **END 2**

GIRDER SCHEDULE LEGEND

LL AND LT ARE SHIPPING SUPPORT LOCATIONS AT LEADING AND TRAILING ENDS, RESPECTIVELY.

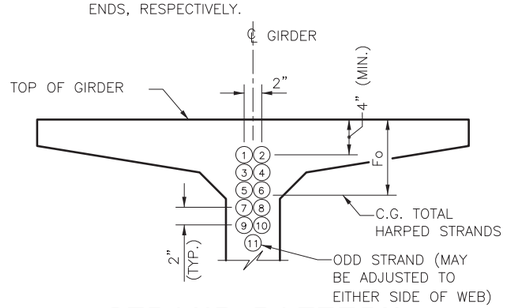

STRAND PATTERN AT GIRDER END

HARPED STRAND LOCATION SEQUENCE SHALL BE AS SHOWN (1), (2) TC.

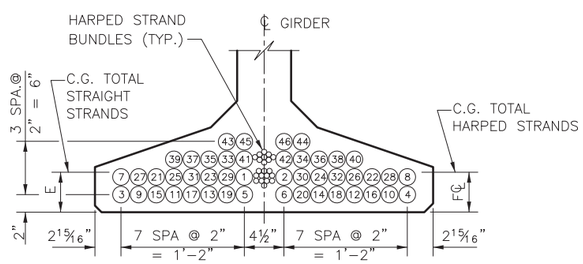

STRAND PATTERN AT ℄ SPAN

STRAIGHT STRAND LOCATION SEQUENCE SHALL BE AS SHOWN (1), (2) ETC.

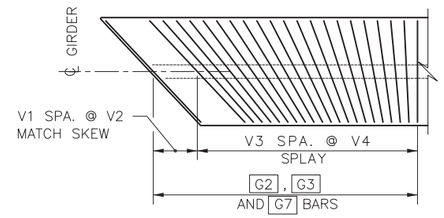

TRANSVERSE REINFORCING SKEWED ENDS

LENGTH OF G3 AND G7 VARY WITH SKEW.
ONLY TRANSVERSE REINFORCEMENT SHOWN.

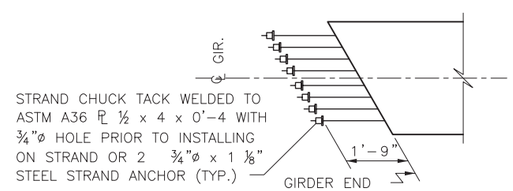

STRAND EXTENSION DETAIL

ANCHOR STRAND WITH TWO PIECE WEDGES BEFORE GIRDER ERECTION. VERIFY WEDGES ARE SEATED TIGHTLY IMMEDIATELY BEFORE PLACING DIAPHRAGM CONCRETE.

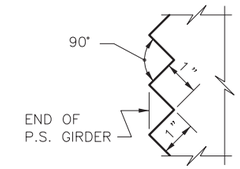

SAWTOOTH DETAILS

SAWTEETH ARE FULL WIDTH – USE SAWTOOTH KEYS FROM BOTTOM OF BOTTOM FLANGE TO BOTTOM OF LOWEST HARPED STRAND AS WELL AS TOP FLANGE ADJACENT TO HARPED STRANDS.

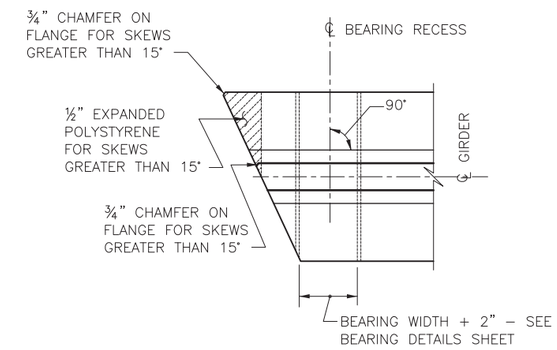

PLAN

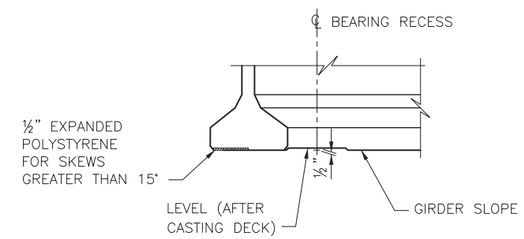

ELEVATION

BEARING RECESS AND BOTTOM FLANGE SPALL PROTECTION DETAIL

WSDOT BRIDGE STANDARD DRAWING 5.6-A4-11 - TO BE REVISED FOR 90% SUBMITTAL

60% REVIEW
NOT FOR CONSTRUCTION

No.	Date	Revision	By	Appr.

HNTB
HNTB Corporation
600 108th Avenue NE
Suite 900
Bellevue, WA 98004
(425) 455-3555

Perteet Inc.
425-252-7700 | 1-800-615-9900
2707 Colby Avenue, Suite 900
Everett, Washington 98201

LYNNWOOD WASHINGTON

RALPH B. BRANDON STATE OF WASHINGTON 25347 REGISTERED PROFESSIONAL ENGINEER

Drawn By TDS	Date 10/10/14	SCALE
Designed By EBB	10/10/14	Horiz N/A
Checked By KL	10/14/14	Vert N/A
Approved By		Project Number 20100156

CITY OF LYNNWOOD
POPLAR WAY EXTENSION BRIDGE PHASE 1
WF42G & WF66G GIRDER DETAILS 2 OF 3

Drawing No. BR31
Sheet No. 27 of Total 48

C.S. 3120 ~ PROJ. NO. TA2797 ~ NORTHWEST REGION ~ I-5 ~ MP 181.62 ~ CITY OF LYNNWOOD ~ POPLAR WAY EXTENSION BRIDGE

Oct 21, 2014 - 12:28pm rschiffler1 J:\60024\CADD\DS001\Drawings\STRUC\20100156_BR31.dwg Layout Name: -WF Girder Details 1

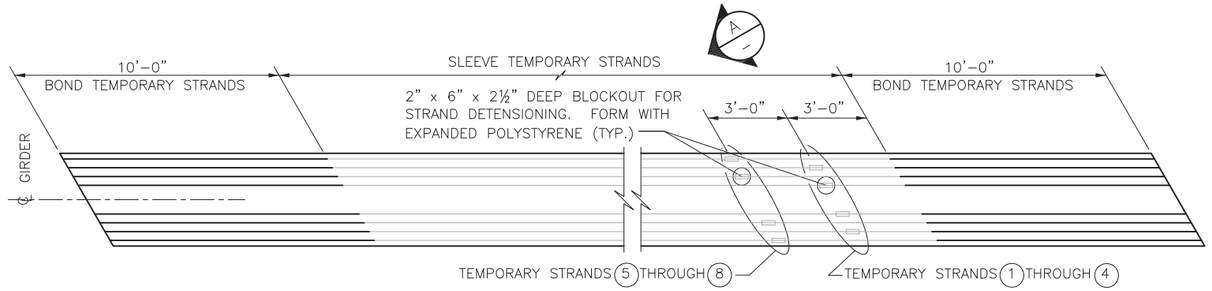

PLAN
PRETENSIONED TEMPORARY TOP STRANDS ALTERNATE

SEE "GIRDER SCHEDULE" FOR NUMBER OF TEMPORARY STRANDS REQUIRED.

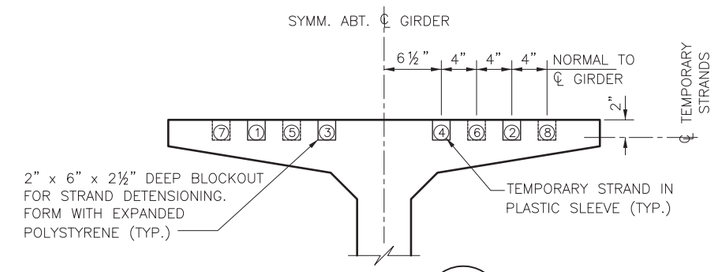

SECTION A

NOTES:

1. TEMPORARY STRAND LOCATION SEQUENCE SHALL BE AS SHOWN 1, 2 ETC.
2. STRANDS 7 AND 8 ARE NOT AVAILABLE FOR POST-TENSIONED ALTERNATE.

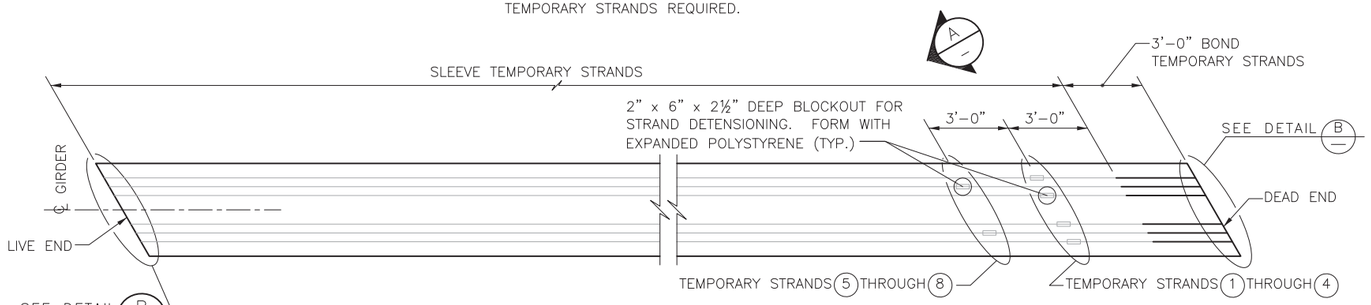

PLAN
POST-TENSIONED TEMPORARY TOP STRANDS ALTERNATE

SEE "GIRDER SCHEDULE" FOR NUMBER OF TEMPORARY STRANDS REQUIRED.
POST-TENSIONED ALTERNATE ONLY AVAILABLE FOR 6 OR FEWER TEMPORARY STRANDS.

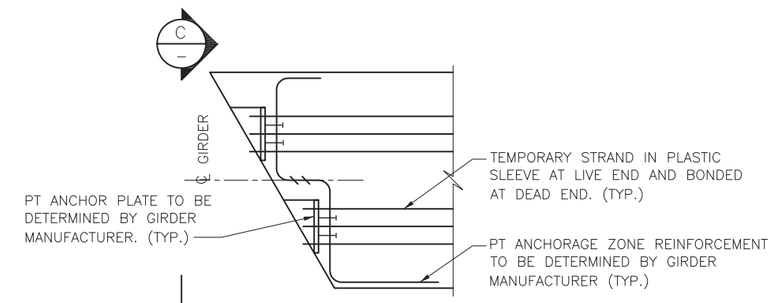

DETAIL B

LIVE END SHOWN
DEAD END SIMILAR.

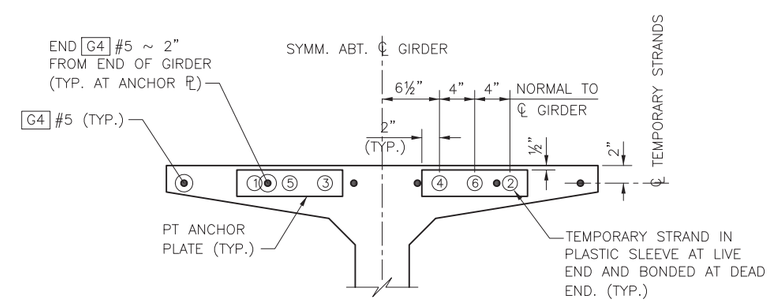

VIEW C

TEMPORARY STRAND LOCATION SEQUENCE SHALL BE AS SHOWN 1, 2 ETC.

WSDOT BRIDGE STANDARD DRAWING 5.6-A4-12 - TO BE REVISED FOR 90% SUBMITTAL

60% REVIEW
NOT FOR CONSTRUCTION

No.	Date	Revision	By	Appr.

HNTB
HNTB Corporation
600 108th Avenue NE
Suite 900
Bellevue, WA 98004
(425) 455-3555

Perteet Inc.
425-252-7700 I 1-800-615-9900
2707 Colby Avenue, Suite 900
Everett, Washington 98201

LYNNWOOD WASHINGTON

BILLIE B. BRANDON
STATE OF WASHINGTON
25347
REGISTERED PROFESSIONAL ENGINEER

Drawn By TDS	Date 10/10/14	SCALE
Designed By EBB	10/10/14	Horiz N/A
Checked By KL	10/14/14	Vert N/A
Approved By		Project Number 20100156

CITY OF LYNNWOOD
POPLAR WAY EXTENSION BRIDGE PHASE 1
WF42G & WF66G GIRDER DETAILS 3 OF 3

Drawing No. BR32
Sheet No. 28 of Total 48

C.S. 3120 ~ PROJ. NO. TA2797 ~ NORTHWEST REGION ~ I-5 ~ MP 181.62 ~ CITY OF LYNNWOOD ~ POPLAR WAY EXTENSION BRIDGE

Oct 21, 2014 - 12:33pm rschiffler1 J:\60024\CADD\DS001\Drawings\STRUC\20100156_BR32.dwg Layout Name:-WF Girder Details 2

GIRDER SCHEDULE

SPAN	GIRDER	GIRDER SIERIES	END 1 TYPE	END 2 TYPE	"A" DIMENSION AT ℄ BEARINGS (IN)	INT. DIAPHRAGM TYPE (FULL OR PARTIAL)	L (FT-IN)	L_d (FT-IN)	L_L (FT-IN)	θ_1 (FT-IN)	θ_2 (DEG)	θ_1 (DEG)	P_2 (FT-IN)	PLAN LENGTH (ALONG GIRDER GRADE) (FT-IN)	MINIMUM CONC. COMP. STRENGTH @ 28-DAYS F'C (KSI)	MINIMUM CONC. COMP. STRENGTH @ RELEASE F'CI (KSI)	NUMBER OF STRAIGHT STRANDS	NUMBER OF HARPED STRANDS	NUMBER OF TEMP. STRANDS	LOCATION OF C.G. STRANDS E (IN)	LOCATION OF C.G. STRANDS F_{CL} (IN)	LOCATION OF C.G. STRANDS F_O (IN)	STRAIGHT STRAND TO EXTEND END 1	STRAIGHT STRAND TO EXTEND END 2	DECK SCREED CAMBER C (IN)	D LOWER BOUND @ 40 DAYS (IN)	D UPPER BOUND @ 120 DAYS (IN)	REINFORCEMENT DETAILS V1	V2 (IN)	V3	V4 (IN)	V5	V6 (IN)	H1 (FT-IN)
1	A–C, L–N	WF42G	B	D	13.75	FULL	3'–0"		3'–6"	46.66	46.66			80'–4 7/8"	7.0	10.0	22	8	0	2.500	4.000	7.000						12.0	2.0	12.0	4.0	15.0	12.0	
1	D–K	WF42G	B	D	13.75	FULL	3'–0"		3'–6"	46.66	46.66			80'–4 7/8"	7.0	10.0	20	7	0	2.375	4.000	7.000						12.0	2.0	12.0	4.0	15.0	12.0	
2	A–C, L–N	WF66G	D	D	8.75	FULL	3'–6"		5'–6"	46.66	46.66			128'–11 5/8"	7.0	10.0	36	12	0	3.325	4.000	9.000						18.0	2.0	18.0	4.0	5.0	12.0	
2	D–K	WF66G	D	D	8.75	FULL	3'–6"		5'–6"	46.66	46.66			128'–11 5/8"	7.0	10.0	30	12	0	2.875	4.000	9.000						18.0	2.0	18.0	4.0	5.0	12.0	
3	A–C, L–N	WF66G	D	D	8.75	FULL	3'–6"		5'–6"	46.66	46.66			149'–0 1/2"	7.0	10.0	44	22	4	8.875	5.000	14.000						24.0	1.8	18.0	4.0	22.0	12.0	
3	D–K	WF66G	D	D	8.75	FULL	3'–6"		5'–6"	46.66	46.66			149'–0 1/2"	7.0	10.0	40	18	2	3.625	4.667	12.000						24.0	1.8	18.0	4.0	22.0	12.0	
4	A	WF42G	D	B	11.5	FULL	3'–0"		3'–6"	50.59	53.49			93'–6 3/8"	7.2	10.0	32	12	0	3.000	4.000	9.000						24.0	1.8	12.0	4.0	20.0	12.0	
4	B	WF42G	D	B	11.5	FULL	3'–0"		3'–6"	51.17	54.08			92'–3 1/4"	7.2	10.0	32	12	0	3.000	4.000	9.000						24.0	1.8	12.0	4.0	20.0	12.0	
4	C	WF42G	D	B	11.5	FULL	3'–0"		3'–6"	51.17	54.08			91'–0 1/4"	7.2	10.0	32	12	0	3.000	4.000	9.000						24.0	1.8	12.0	4.0	20.0	12.0	
4	D	WF42G	D	B	11.5	FULL	3'–0"		3'–6"	52.39	55.29			89'–9 1/4"	7.0	10.0	24	10	0	2.625	4.000	8.000						24.0	1.8	12.0	4.0	20.0	12.0	
4	E	WF42G	D	B	11.5	FULL	3'–0"		3'–6"	53.03	55.93			88'–6 3/8"	7.0	10.0	24	10	0	2.625	4.000	8.000						24.0	1.8	12.0	4.0	20.0	12.0	
4	F	WF42G	D	B	11.5	FULL	3'–0"		3'–6"	53.68	56.58			87'–3 5/8"	7.0	10.0	24	10	0	2.625	4.000	8.000						24.0	1.8	12.0	4.0	20.0	12.0	
4	G	WF42G	D	B	11.5	FULL	3'–0"		3'–6"	54.35	57.26			86'–1"	7.0	10.0	24	10	0	2.625	4.000	8.000						24.0	1.8	12.0	4.0	20.0	12.0	
4	H	WF42G	D	B	11.5	FULL	3'–0"		3'–6"	55.04	57.95			84'–10 1/2"	7.0	10.0	20	10	0	2.625	4.000	8.000						24.0	1.8	12.0	4.0	20.0	12.0	
4	I	WF42G	D	B	11.5	FULL	3'–0"		3'–6"	55.76	58.66			83'–8 1/8"	7.0	10.0	20	10	0	2.625	4.000	8.000						24.0	1.8	12.0	4.0	20.0	12.0	
4	J	WF42G	D	B	11.5	FULL	3'–0"		3'–6"	56.49	59.39			82'–5 7/8"	7.0	10.0	20	10	0	2.625	4.000	8.000						24.0	1.8	12.0	4.0	20.0	12.0	
4	K	WF42G	D	B	11.5	FULL	3'–0"		3'–6"	57.24	60.15			81'–3 3/4"	7.0	10.0	20	10	0	2.625	4.000	8.000						24.0	1.8	12.0	4.0	20.0	12.0	
4	L	WF42G	D	B	11.5	FULL	3'–0"		3'–6"	58.02	60.92			80'–1 7/8"	7.0	10.0	24	10	0	2.625	4.000	8.000						24.0	1.8	12.0	4.0	20.0	12.0	
4	M	WF42G	D	B	11.5	FULL	3'–0"		3'–6"	58.82	61.72			79'–0 1/8"	7.0	10.0	24	10	0	2.625	4.000	8.000						24.0	1.8	12.0	4.0	20.0	12.0	
4	N	WF42G	D	B	11.5	FULL	3'–0"		3'–6"	59.64	62.54			77'–10 7/8"	7.0	10.0	24	10	0	2.625	4.000	8.000						24.0	1.8	12.0	4.0	20.0	12.0	

GENERAL NOTES:

1. PLAN LENGTH SHALL BE INCREASED AS NECESSARY TO COMPENSATE FOR SHORTENING DUE TO PRESTRESS AND SHRINKAGE.
2. ALL PRETENSIONED AND TEMPORARY STRANDS SHALL BE 0.6"ø AASHTO M203 GRADE 270 LOW RELAXATION STRANDS, JACKED TO 202.5 KSI.
3. FOR END TYPES A, C AND D CUT ALL STRANDS FLUSH WITH THE GIRDER ENDS AND PAINT WITH AN APPROVED EPOXY RESIN, EXCEPT FOR EXTENDED STRANDS AS SHOWN. FOR END TYPE B CUT ALL STRANDS 1" BELOW CONCRETE SURFACE AND GROUT WITH AN APPROVED EPOXY GROUT.
4. THE TOP SURFACE OF THE GIRDER FLANGE SHALL BE ROUGHENED IN ACCORDANCE WITH SECTION 6–02.3(25)H OF THE WSDOT STANDARD SPECIFICATIONS.
5. LIFTING EMBEDMENTS SHALL BE INSTALLED IN ACCORDANCE WITH SECTION 6–02.3(25)L OF THE WSDOT STANDARD SPECIFICATIONS.
6. CAUTION SHALL BE EXERCISED IN HANDLING AND PLACING GIRDERS. ALL GIRDERS SHALL BE CHECKED BY THE CONTRACTOR TO ENSURE THAT THEY ARE BRACED ADEQUATELY TO PREVENT TIPPING AND TO CONTROL LATERAL BENDING DURING SHIPPING. ONCE ERECTED, ALL GIRDERS SHALL BE BRACED LATERALLY TO PREVENT TIPPING UNTIL THE DIAPHRAGMS ARE CAST AND CURED.
7. FORMS FOR BEARING PAD RECESSES SHALL BE CONSTRUCTED AND FASTENED IN SUCH A MANNER AS TO NOT CAUSE DAMAGE TO THE GIRDER DURING THE STRAND RELEASE OPERATION.
8. TEMPORARY TOP STRANDS SHALL BE EITHER PRETENSIONED OR POST–TENSIONED IN ACCORDANCE WITH SECTION 6–02.3(25)L OF THE WSDOT STANDARD SPECIFICATIONS AND THE GIRDER DETAILS SHEETS. THE LIFTING LOCATION "L" AND CONCRETE RELEASE STRENGTH "F'CI" SHOWN IN THE GIRDER SCHEDULE ASSUME THAT THE TEMPORARY TOP STRANDS ARE PRETENSIONED. ALTERNATIVELY, POST–TENSIONED TEMPORARY TOP STRANDS MAY BE USED IF THE LIFTING POINTS IN THE GIRDER SCHEDULE ARE MAINTAINED AND THE STRANDS ARE STRESSED PRIOR TO LIFTING THE GIRDER FROM THE FORM.
9. FOR DIAPHRAGMS, OMIT HOLES AND PLACE INSERTS ON THE INTERIOR FACE OF EXTERIOR GIRDERS. PLACE HOLES AND INSERTS PARALLEL TO SKEW. INSERTS SHALL BE 1"ø MEADOWBURKE MX–3 HI–TENSILE, 1"ø x 5½" WILLIAMS F22 OPEN FERRULE INSERT, 1"ø x 4⅝" DAYTON–SUPERIOR F–62 FLARED THIN SLAB FERRULE INSERT OR APPROVED EQUAL.
10. DEFORMED WELDED WIRE REINFORCEMENT CONFORMING TO SECTION 9–07.7 OF THE WSDOT STANDARD SPECIFICATIONS WITH DEFORMED WIRE CONFORMING TO SECTION 9–07.8 OF THE WSDOT STANDARD SPECIFICATIONS MAY BE SUBSTITUTED FOR MILD STEEL REINFORCEMENT IF AASHTO LRFD BRIDGE DESIGN SPECIFICATION REQUIREMENTS (INCLUDING DEVELOPMENT AND ANCHORAGE) ARE MET. WELDED WIRE REINFORCEMENT SHALL HAVE THE SAME AREA AND SPACING AS THE MILD STEEL REINFORCEMENT THAT IT REPLACES AND THE YIELD STRENGTH SHALL BE GREATER THAN OR EQUAL TO 60 KSI. SHEAR STIRRUP LONGITUDINAL WIRES AND TACK WELDS SHALL BE EXCLUDED FROM GIRDER WEBS. LONGITUDINAL WIRES FOR ANCHORAGE OF WELDED WIRE REINFORCEMENT SHALL HAVE AN AREA OF 40% OR MORE OF THE AREA OF THE WIRE BEING ANCHORED BUT SHALL NOT BE LESS THAN D4.

WSDOT BRIDGE STANDARD DRAWING 5.6-A4-1 - TO BE REVISED FOR 90% SUBMITTAL

60% REVIEW
NOT FOR CONSTRUCTION

No.	Date	Revision	By	Appr.

HNTB
HNTB Corporation
600 108th Avenue NE
Suite 900
Bellevue, WA 98004
(425) 455–3555

Perteet Inc.
425-252-7700 I 1-800-615-9900
2707 Colby Avenue, Suite 900
Everett, Washington 98201

LYNNWOOD WASHINGTON

BALDR B. BRANDEN, STATE OF WASHINGTON, 25347, REGISTERED PROFESSIONAL ENGINEER

Drawn By TDS	Date 10/10/14	SCALE
Designed By EBB	10/10/14	Horiz N/A
Checked By KL	10/14/14	Vert N/A
Approved By		Project Number 20100156

CITY OF LYNNWOOD
POPLAR WAY EXTENSION BRIDGE PHASE 1
GIRDER SCHEDULE & NOTES

Drawing No. BR33
Sheet No. 29 of Total 48

Oct 22, 2014 - 7:25am rscrifferd J:\60024\CADD\DS001\Drawings\STRUC\20100156_BR33.dwg Layout Name:.WF SCHEDULE AND NOTES

C.S 3120 ~ PROJ. NO. TA2797 ~ NORTHWEST REGION ~ I–5 ~ MP 181.62 ~ CITY OF LYNNWOOD ~ POPLAR WAY EXTENSION BRIDGE

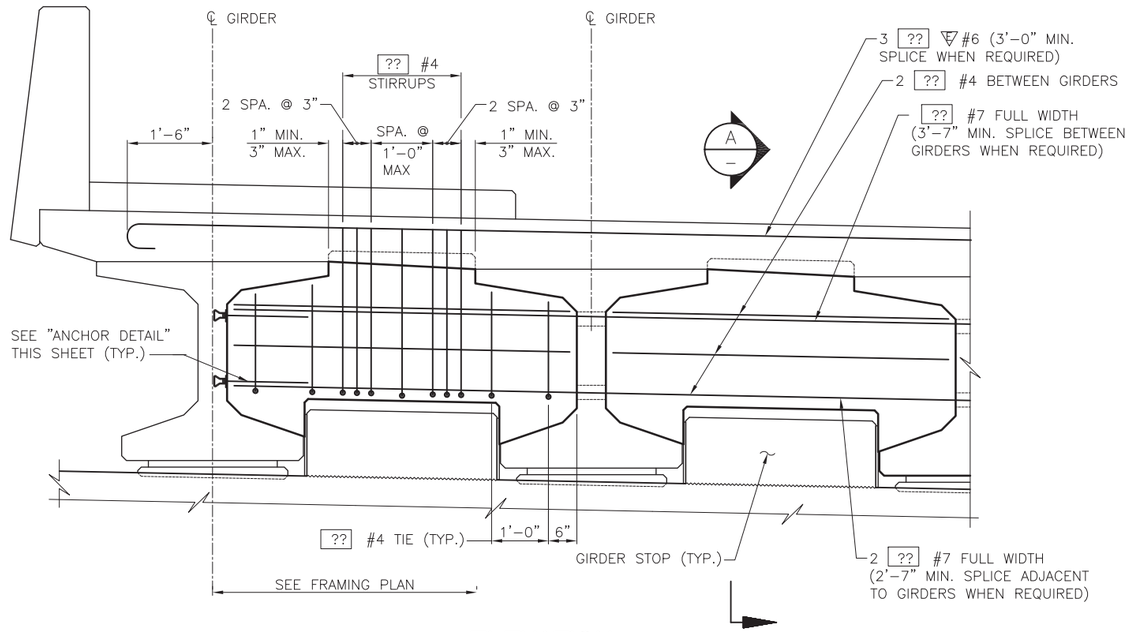

ELEVATION
END DIAPHRAGM

DIMENSIONS ARE ALONG DIAPHRAGM

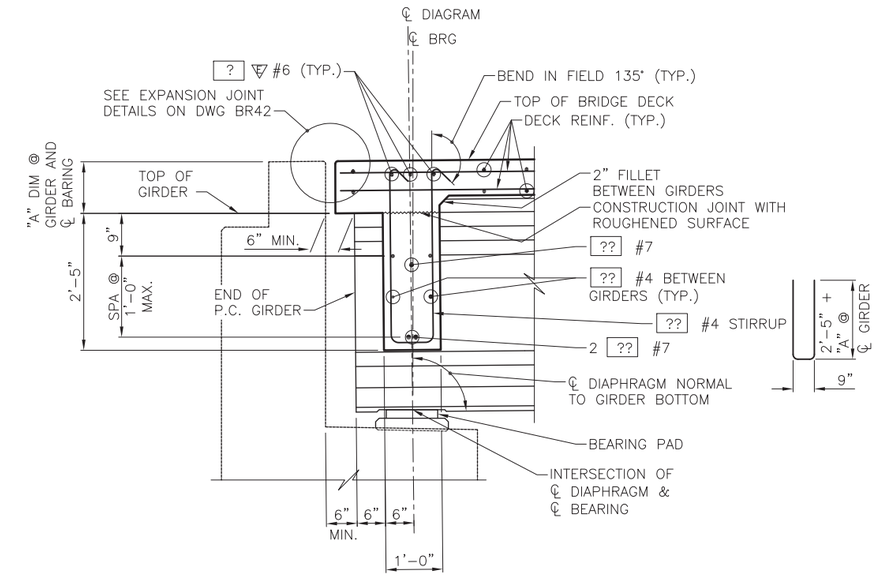

SECTION A

LONGITUDINAL DIMENSIONS ARE NORMAL TO DIAPHRAGM.
GIRDER STOP NOT SHOWN FOR CLARITY.
+ GRADE SHOWN, -GRADE SIMILAR.

NOTES:

1. GIRDERS SHALL BE HELD RIGIDLY IN PLACE WHEN DIAPHRAGMS ARE PLACED.
2. IT MAY BE NECESSARY TO THREAD #7 REINFORCING BARS THROUGH HOLES IN GIRDERS PRIOR TO PLACING EXTERIOR GIRDERS.
3. CUT/RELEASE GIRDER TEMPORARY STRANDS BEFORE CASTING DIAPHRAGM. SEE TEMPORARY STRAND CUTTING SEQUENCE.
4. LONGITUDINAL DIMENSIONS ARE NORMAL TO SKEW.
5. FOR CONCRETE PLACEMENT PROCEDURE SEE CONSTRUCTION SEQUENCE SHEETS.

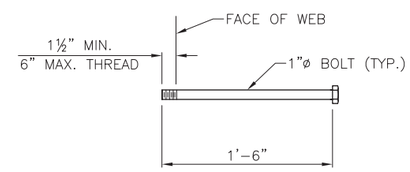

ANCHOR DETAIL

ASTM A-307

WSDOT BRIDGE STANDARD DRAWING 5.6-A4-15 - TO BE REVISED FOR 90% SUBMITTAL

60% REVIEW
NOT FOR CONSTRUCTION

No.	Date	Revision	By	Appr.

HNTB
HNTB Corporation
600 108th Avenue NE
Suite 900
Bellevue, WA 98004
(425) 455-3555

Perteet Inc.
425-252-7700 | 1-800-615-9900
2707 Colby Avenue, Suite 900
Everett, Washington 98201

LYNNWOOD WASHINGTON

ELLEN B. BRENDEN
STATE OF WASHINGTON
25347
REGISTERED PROFESSIONAL ENGINEER

Drawn By	TDS	Date 10/10/14
Designed By	EBB	10/10/14
Checked By	KL	10/14/14
Approved By		

SCALE
Horiz N/A
Vert N/A
Project Number 20100156

CITY OF LYNNWOOD
POPLAR WAY EXTENSION BRIDGE PHASE 1
END DIAPHRAGM DETAILS

Drawing No. BR34
Sheet No. 30 of Total 48

Oct 22, 2014 - 7:27am rschiffert J:\60024\CADD\DS001\Drawings\STRUC\20100156_BR34.dwg Layout Name: WF42G End Diaphragm Details

C.S 3120 ~ PROJ. NO. TA2797 ~ NORTHWEST REGION ~ I-5 ~ MP 181.62 ~ CITY OF LYNNWOOD ~ POPLAR WAY EXTENSION BRIDGE

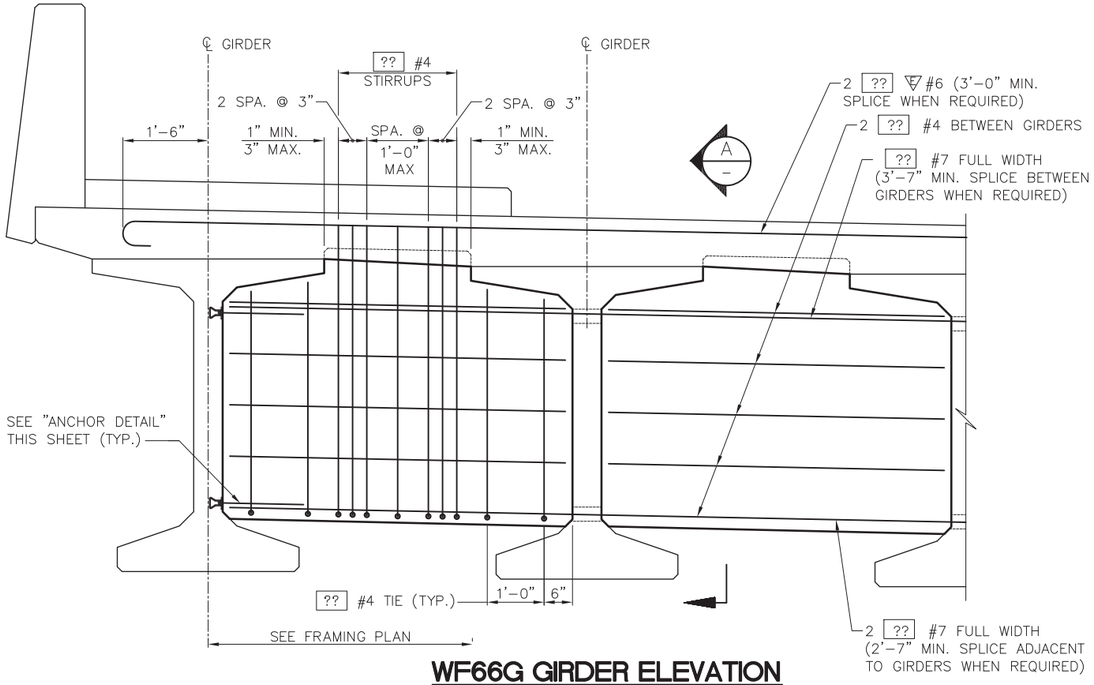

WF66G GIRDER ELEVATION INTERMEDIATE DIAPHRAGM

DIMENSIONS ARE ALONG DIAPHRAGM

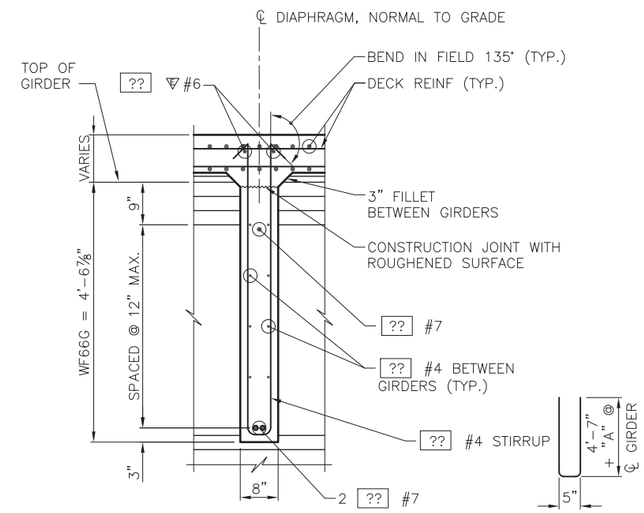

SECTION A

SEE "GIRDER SCHEDULE AND NOTES" DWG BR33 FOR DIMENSION "A".

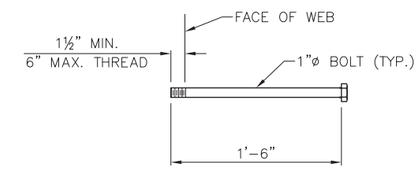

ANCHOR DETAIL

ASTM A-307

NOTES:

1. GIRDERS SHALL BE HELD RIGIDLY IN PLACE WHEN DIAPHRAGMS ARE PLACED.
2. IT MAY BE NECESSARY TO THREAD #7 REINFORCING BARS THROUGH HOLES IN GIRDERS PRIOR TO PLACING EXTERIOR GIRDERS.
3. CUT/RELEASE GIRDER TEMPORARY STRANDS BEFORE CASTING DIAPHRAGM. SEE TEMPORARY STRAND CUTTING SEQUENCE.
4. LONGITUDINAL DIMENSIONS ARE NORMAL TO SKEW.
5. FOR CONCRETE PLACEMENT PROCEDURE SEE "SUPERSTRUCTURE CONSTRUCTION SEQUENCE" DRAWINGS.

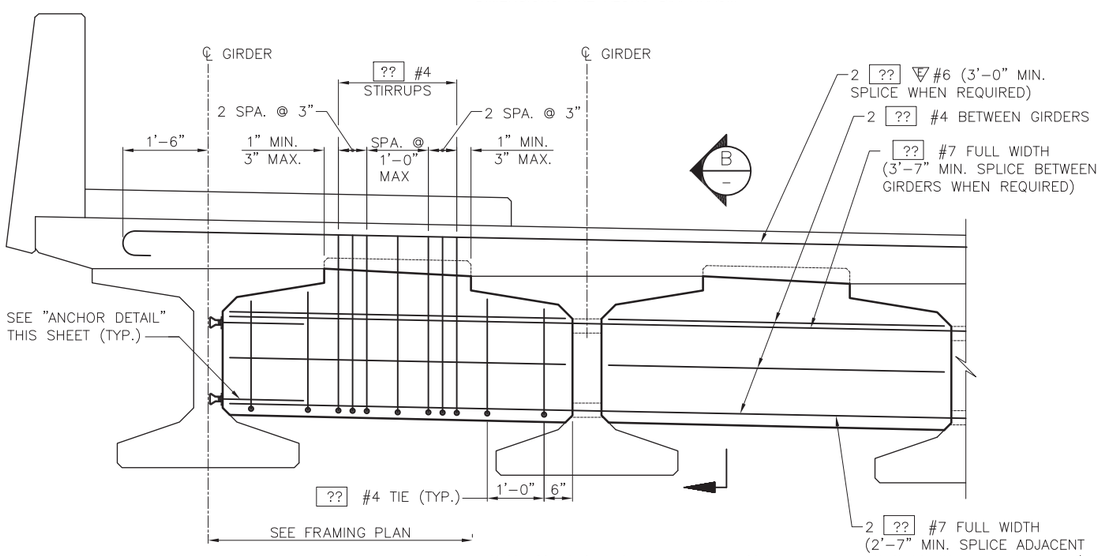

WF42G GIRDER ELEVATION INTERMEDIATE DIAPHRAGM

DIMENSIONS ARE ALONG DIAPHRAGM

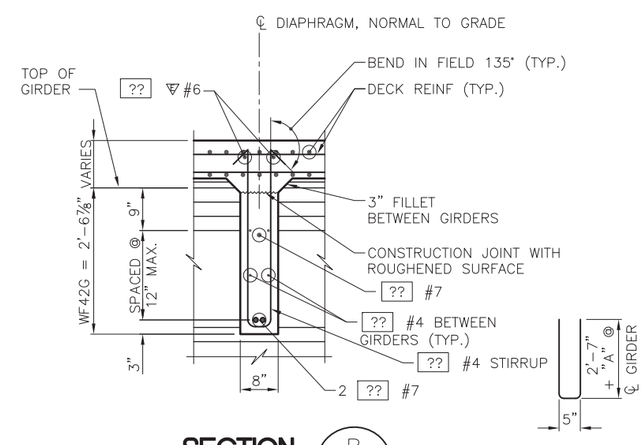

SECTION B

SEE "GIRDER SCHEDULE AND NOTES" DWG BR33 FOR DIMENSION "A".

WSDOT BRIDGE STANDARD DRAWING 5.6-A4-20 - TO BE REVISED FOR 90% SUBMITTAL

60% REVIEW
NOT FOR CONSTRUCTION

No.	Date	Revision	By	Appr.

HNTB
HNTB Corporation
600 108th Avenue NE
Suite 900
Bellevue, WA 98004
(425) 455-3555

Perteet Inc.
425-252-7700 | 1-800-615-9900
2707 Colby Avenue, Suite 900
Everett, Washington 98201

LYNNWOOD WASHINGTON

BILLON B. BRENDON — STATE OF WASHINGTON — 25347 — REGISTERED PROFESSIONAL ENGINEER

Drawn By TDS	Date 10/10/14	SCALE
Designed By EBB	10/10/14	Horiz N/A
Checked By KL	10/14/14	Vert N/A
Approved By		Project Number 20100156

CITY OF LYNNWOOD
POPLAR WAY EXTENSION BRIDGE PHASE 1
INTERMEDIATE DIAPHRAGM DETAILS

Drawing No. BR35
Sheet No. 31 of Total 48

C.S. 3120 ~ PROJ. NO. TA2797 ~ NORTHWEST REGION ~ I-5 ~ MP 181.62 ~ CITY OF LYNNWOOD ~ POPLAR WAY EXTENSION BRIDGE

Oct 22, 2014 - 12:52pm rschilferf J:\60024\CADD\DS001\Drawings\STRUC\20100156_BR35.dwg Layout Name: WF42G & WF66G Intermediate Diaphragms

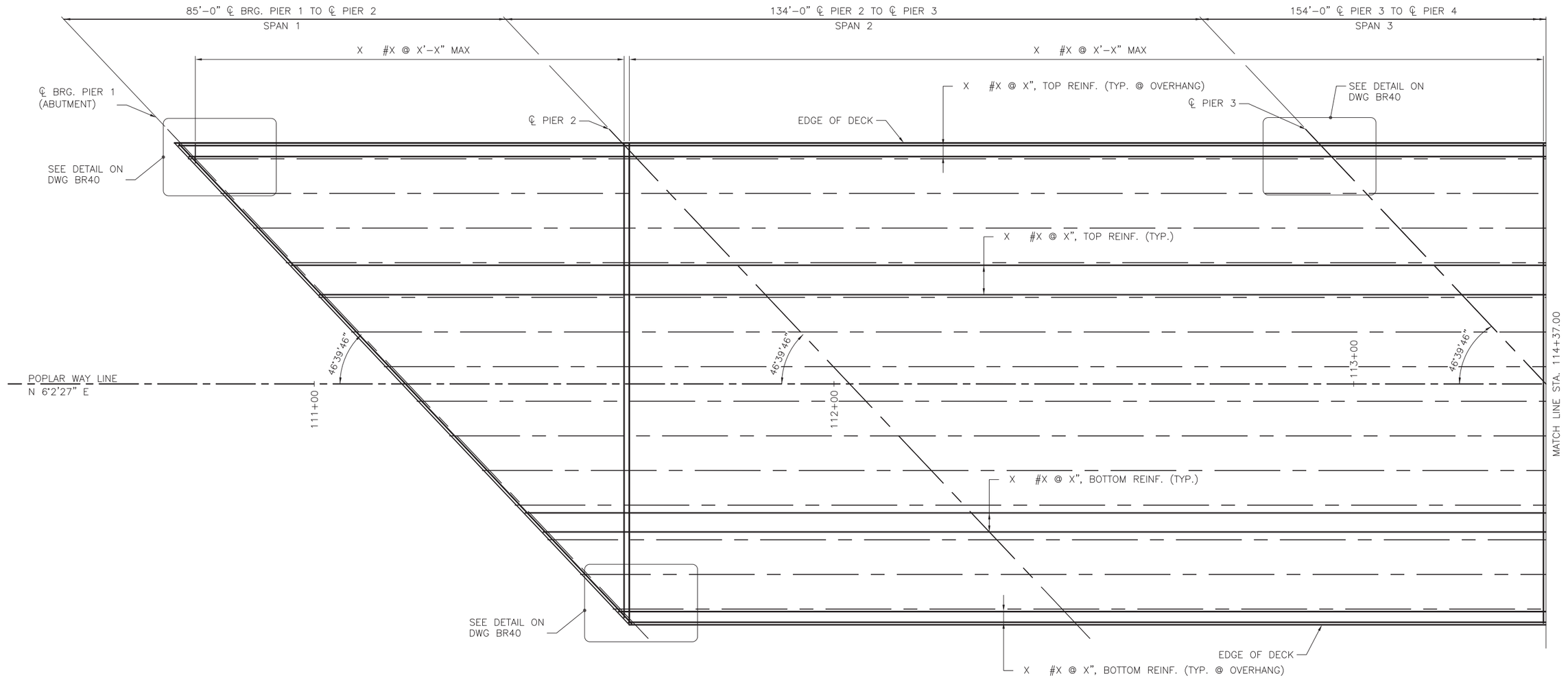

DECK REINFORCING PLAN

IS N 52°42'13" E

60% REVIEW
NOT FOR CONSTRUCTION

No.	Date	Revision	By	Appr.

HNTB
HNTB Corporation
600 108th Avenue NE
Suite 900
Bellevue, WA 98004
(425) 455-3555

Perteet Inc.
425-252-7700 | 1-800-615-9900
2707 Colby Avenue, Suite 900
Everett, Washington 98201

LYNNWOOD WASHINGTON

BALDIN B. BRENDEN
STATE OF WASHINGTON
25347
REGISTERED PROFESSIONAL ENGINEER

Drawn By TDS	Date 10/10/14	SCALE
Designed By EBB	10/10/14	Horiz N/A
Checked By KL	10/14/14	Vert N/A
Approved By		Project Number 20100156

CITY OF LYNNWOOD
POPLAR WAY EXTENSION BRIDGE PHASE 1
DECK REINFORCING PLAN 1 OF 2

Drawing No. BR36
Sheet No. 32 / 48 of Total

Oct 21, 2014 - 10:32am rschiffer1 J:\60024\CADD\DS001\Drawings\STRUC\20100156_BR36.dwg Layout Name:.Deck Reinforcing Plan 1
C.S 3120 ~ PROJ. NO. TA2797 ~ NORTHWEST REGION ~ I-5 ~ MP 181.62 ~ CITY OF LYNNWOOD ~ POPLAR WAY EXTENSION BRIDGE