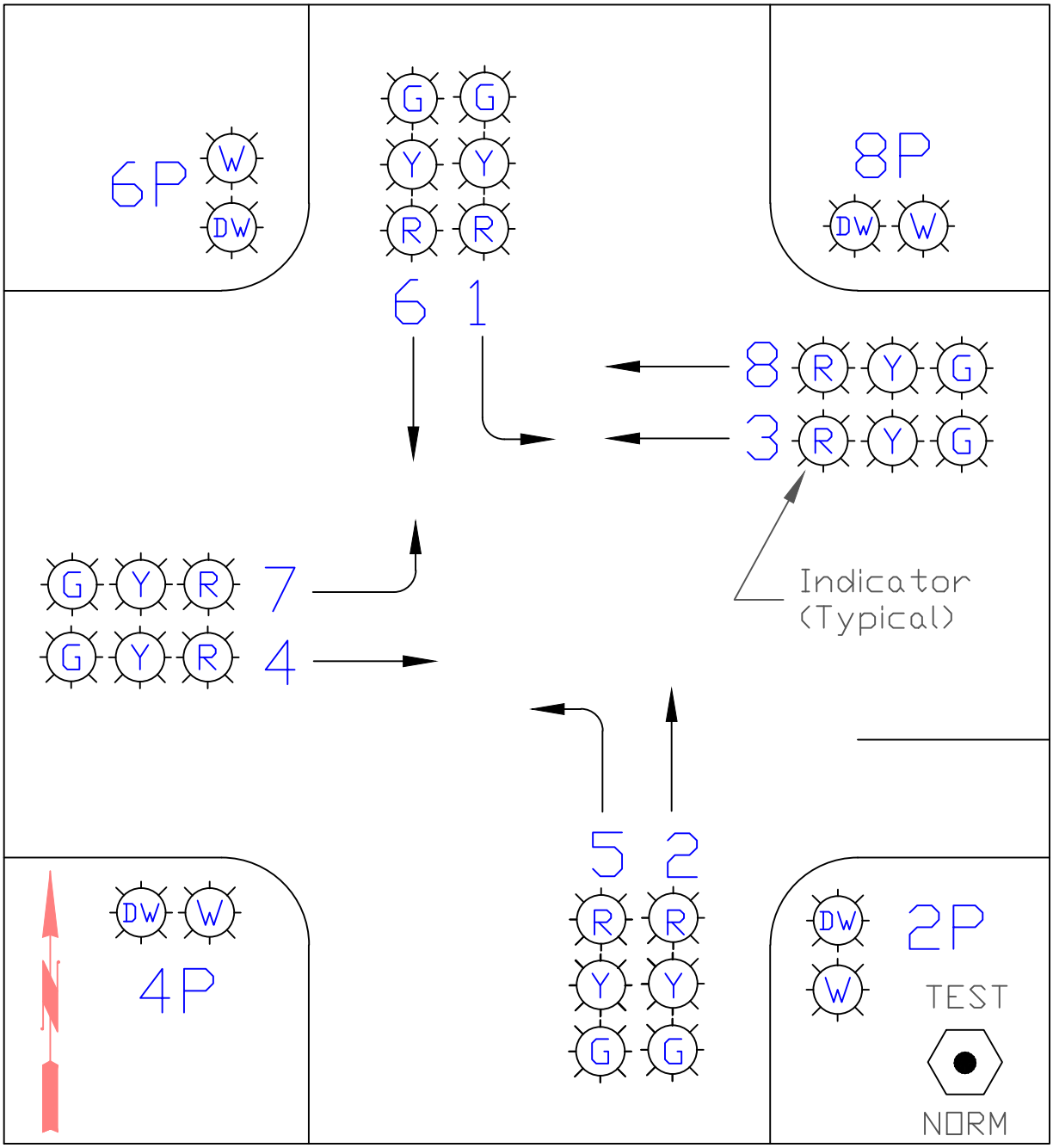

INTERSECTION CONFIGURATION

LYNNWOOD WASHINGTON
PUBLIC WORKS

PHASING STANDARD - DISPLAY PANEL

I:\Standard_Plans

DRAWING NUMBER	STD8-14
SCALE	NONE
REVISION DATE	03/02
DEPARTMENT	PW