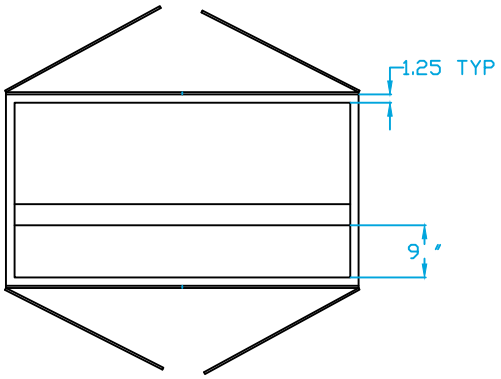

TOP VIEW

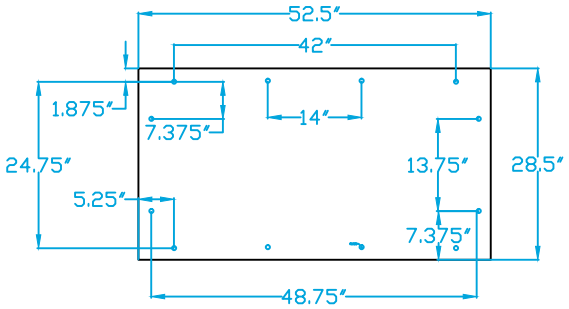

ROOF

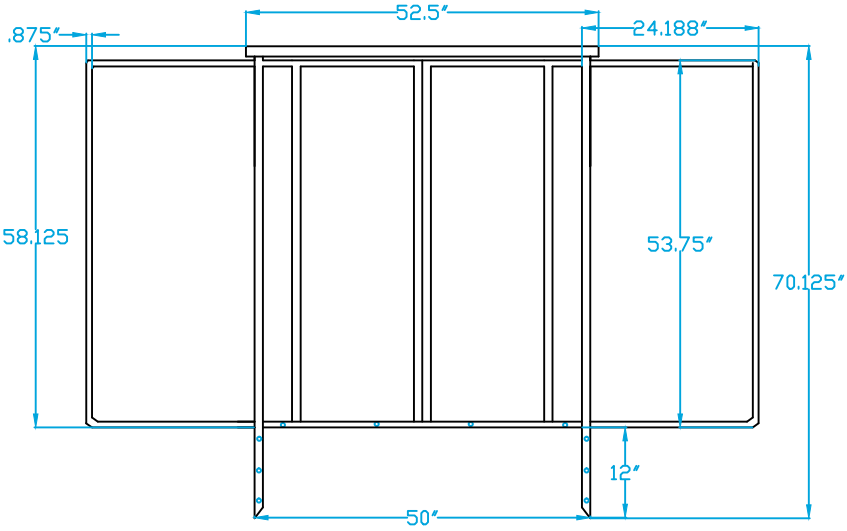

FRONT VIEW

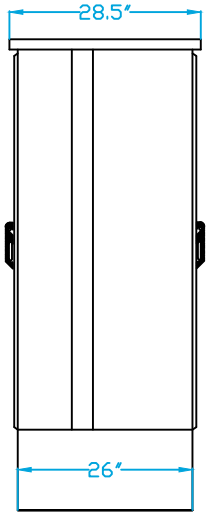

SIDE VIEW

LYNNWOOD WASHINGTON
PUBLIC WORKS

FIBER OPTIC CABINET

I:\Standard_Plans

DRAWING NUMBER	STD8-16
SCALE	NONE
REVISION DATE	06/03
DEPARTMENT	PW