POLICE PANEL DETAIL

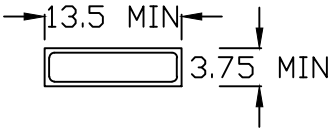


BOTTOM DETAIL

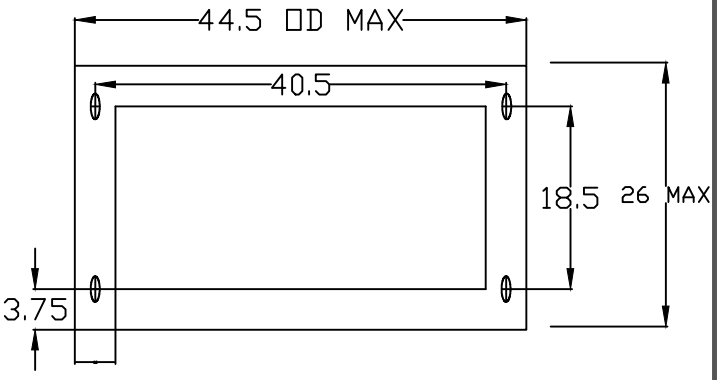


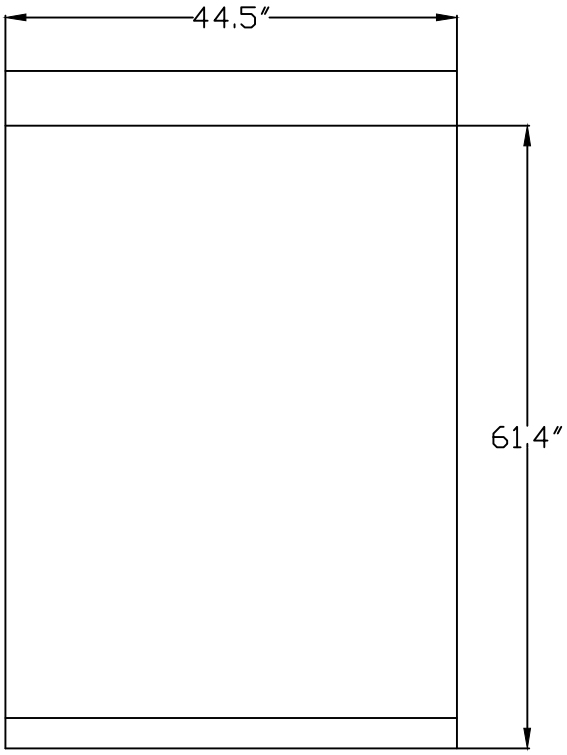


FRONT VIEW

CAGE SUPPORT DETAIL

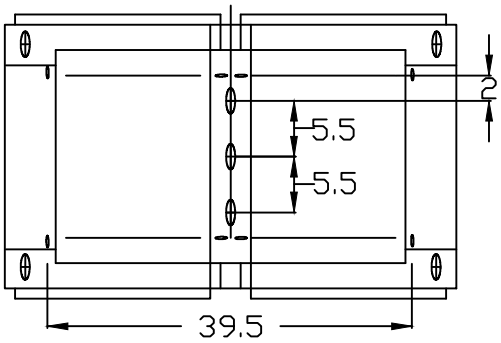


SIDE VIEW

LYNNWOOD WASHINGTON
PUBLIC WORKS

ITS CABINET

I:\Standard_Plans

| | |
|---|---|
| DRAWING NUMBER | STD8-25 |
| SCALE | NONE |
| REVISION DATE | 10/03 |
| DEPARTMENT | PW |