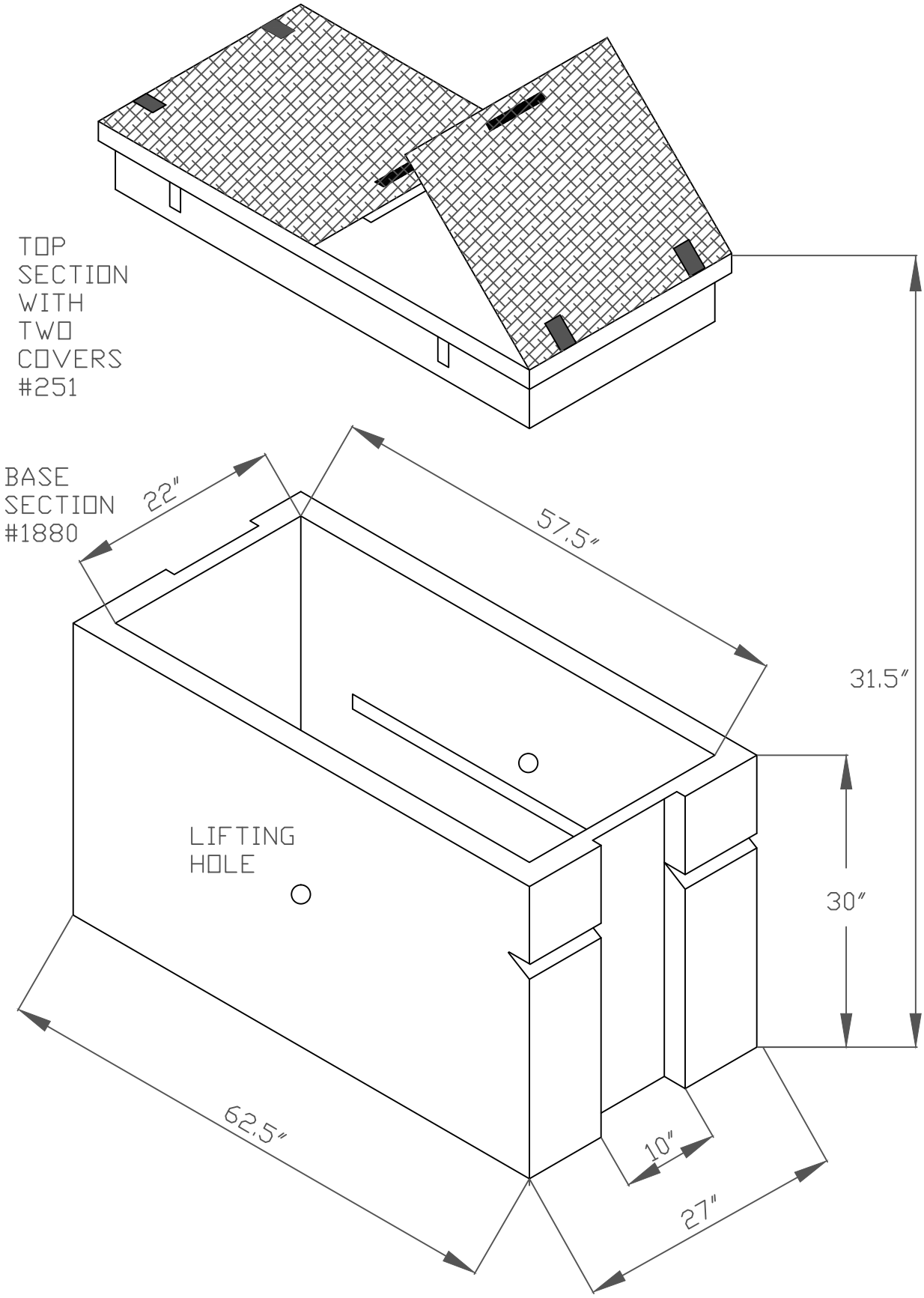

LYNNWOOD WASHINGTON
PUBLIC WORKS

FIBER SPLICE VAULT

I:\Standard_Plans

DRAWING NUMBER	STD8-30
SCALE	NONE
REVISION DATE	06/30
DEPARTMENT	PW