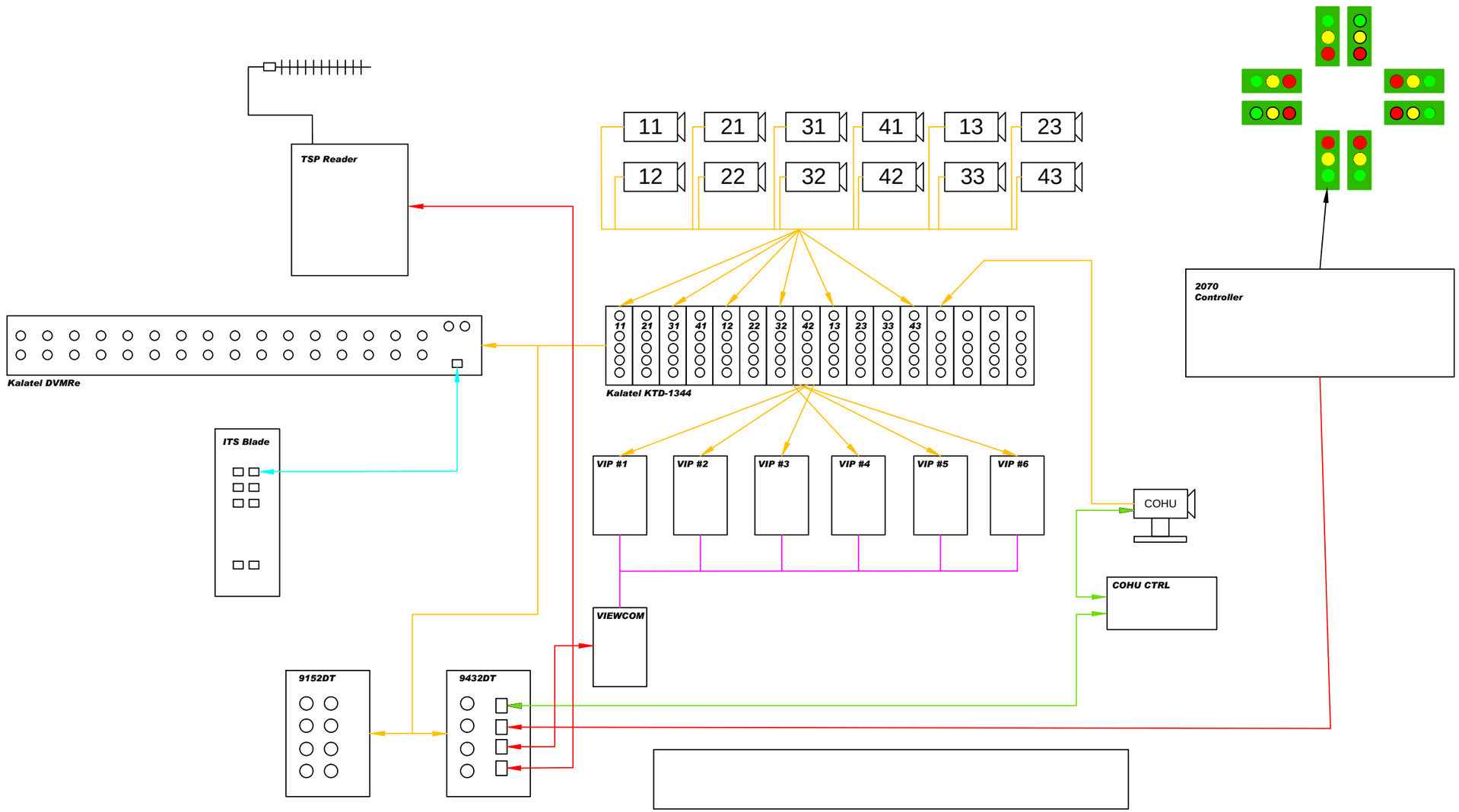

LYNNWOOD WASHINGTON
PUBLIC WORKS

NETWORK

I:\Standard_Plans

DRAWING NUMBER	STD8-58
SCALE	NONE
REVISION DATE	01/04
DEPARTMENT	PW