DRAWN BY: FERN LIDDELL

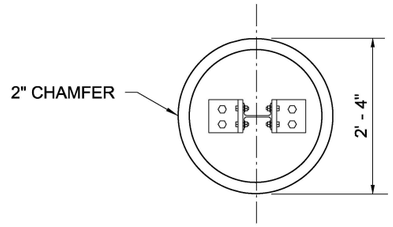

PLAN VIEW

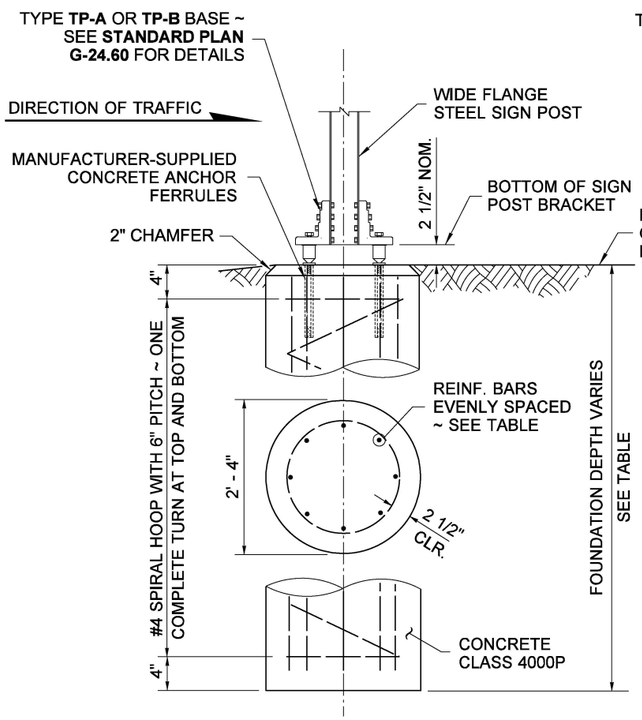

ELEVATION VIEW

TYPE TP-A & TYPE TP-B FOUNDATION

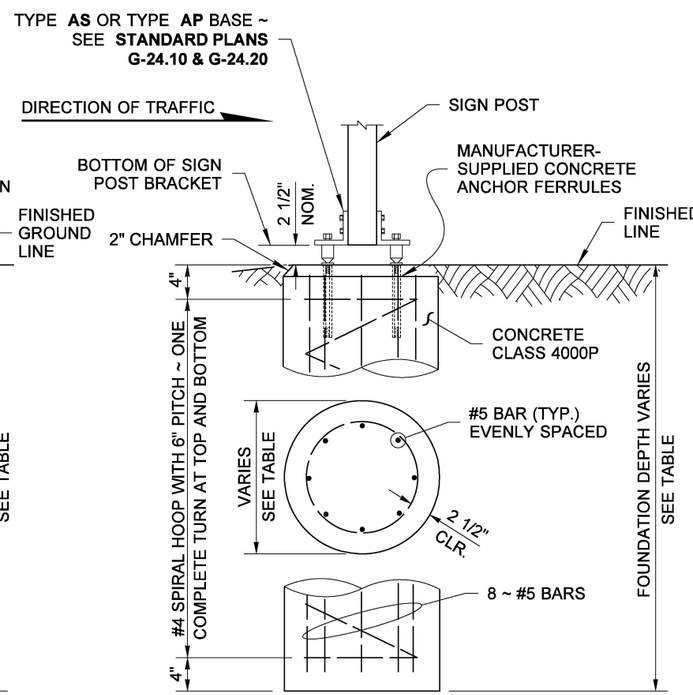

ELEVATION VIEW

TYPE AS & TYPE AP FOUNDATION

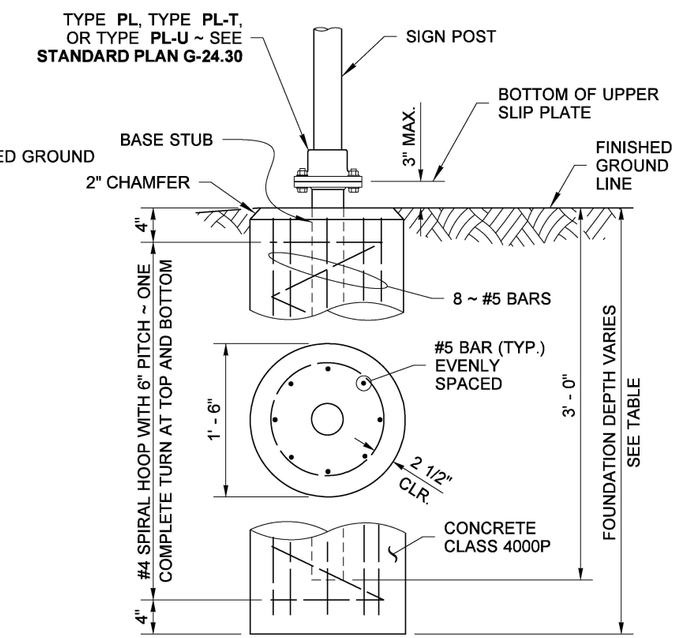

ELEVATION VIEW

TYPE PL, TYPE PL-T & TYPE PL-U FOUNDATION

KEY NOTES

1. Foundation depths based on allowable lateral bearing pressure in excess of 2500 PSF.
2. Two-Post installation.

NOTES

1. Install conduit for post-mounted Junction Box in the concrete foundation, when required. See **Standard Plan J-40.35, Sheet 2.**
2. For single post square steel tube post installations use Type **AS** 4- inch square steel tube posts.

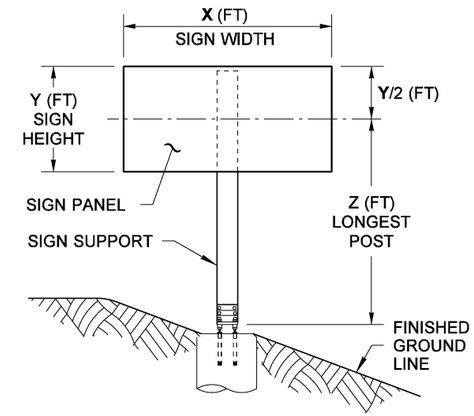

XYZ CALCULATION

XYZ (FT^3) = X × Y × Z
USED TO DETERMINE POST SIZE ~ SEE FOUNDATION TABLES

TYPE TP-A & TP-B FOUNDATION TABLE
SEE NOTE 1

POST SIZE		MAX. XYZ		VERTICAL REBAR	FDN. DEPTH 1
ASTM A 36	ASTM A 992	2 POST	3 POST		
W6 x 12	W6 x 9	1570	2355	8 ~ # 5	4' - 0"
W6 x 16	W6 x 12	2340	3510	8 ~ # 5	5' - 0"
W8 x 21	W8 x 18	4120	6180	8 ~ # 6	7' - 0"
W10 x 26	W10 x 22	6320	9480	8 ~ # 7	8' - 0"
W12 x 30	W12 x 26	8700	----	8 ~ # 7	9' - 0"

TYPE AS FOUNDATION TABLE

POST SIZE	MAX. XYZ	FDN. DIAM.	FDN. DEPTH 1
4" SQ.	250	18"	4' - 0"

TYPE AP FOUNDATION TABLE

POST SIZE	MAX. XYZ	FDN. DIAM.	FDN. DEPTH 1
3" O.D.	225	18"	3' - 6"
3 1/2" O.D.	250	18"	4' - 0"
4" O.D.	275	24"	4' - 0"
4 1/2" O.D.	300	24"	4' - 0"

TYPE PL, TYPE PL-T & TYPE PL-U FOUNDATION TABLE

MAX. XYZ	FDN. DEPTH 1
225	3' - 6"
265	4' - 0"
300	4' - 6"
600 2	4' - 6"

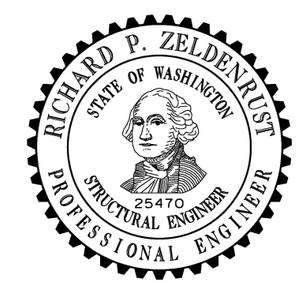

Zeldenrust, Richard
Aug 18 2020 1:12 PM

STEEL SIGN SUPPORT FOUNDATION DETAILS

STANDARD PLAN G-25.10-05

SHEET 1 OF 1 SHEET

APPROVED FOR PUBLICATION
Date: 2020.09.16 10:05:06 -07'00'
STATE DESIGN ENGINEER
Washington State Department of Transportation