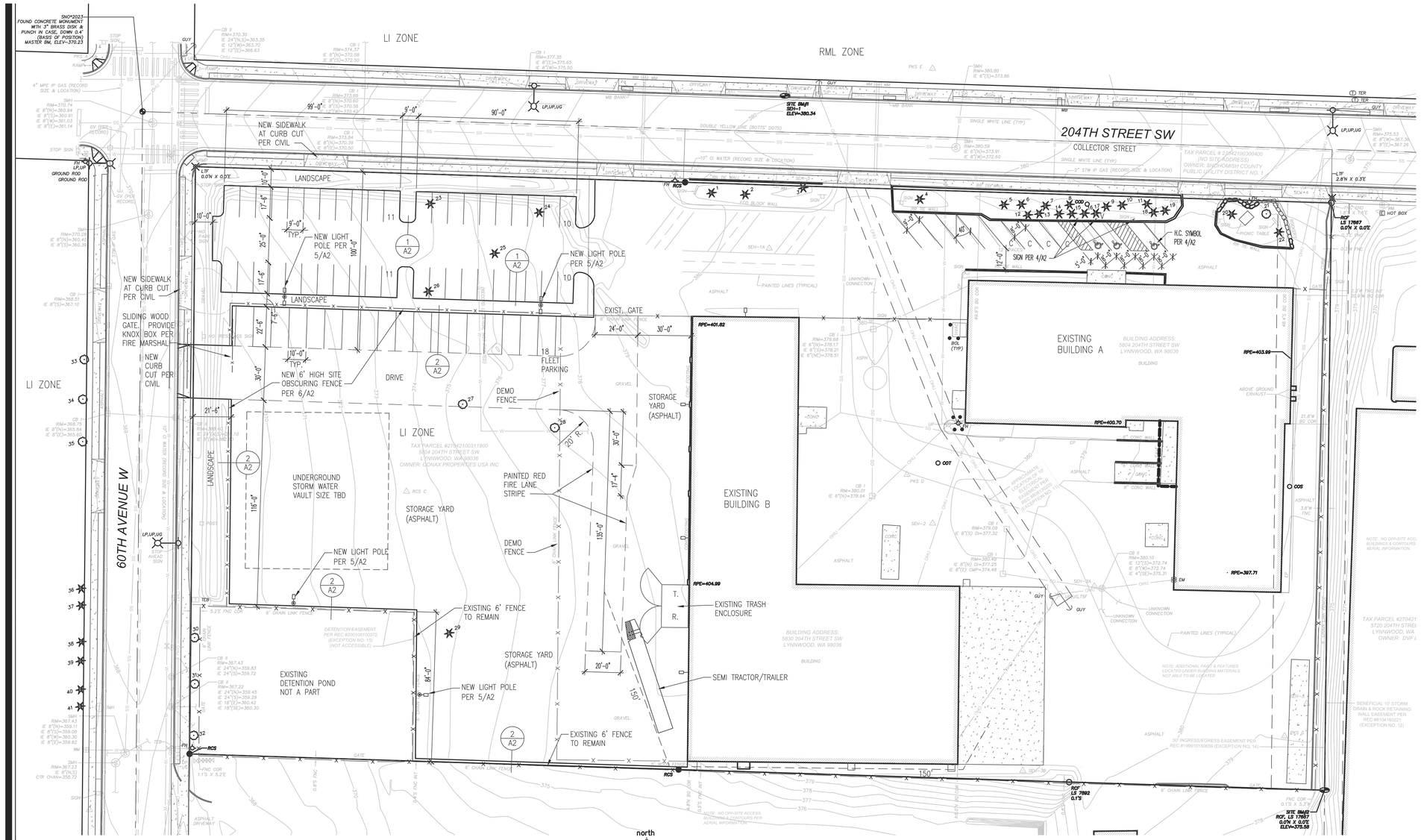

SITE PLAN

1" = 30'-0"

north

0 15' 30' 60' 90'

PROJECT STATISTICS

ZONE: LI
TAX PARCEEL: 27042100311900
CODES: 2018 IBC, UPC, IFC, 2018 ICC ANSI 117.1, CITY OF LYNNWOOD MUNICIPAL CODE
SITE AREA: 210,697 S.F. (4.84 AC)
BUILDING AREA:
BUILDING A: VN SPRINKLERED
19,952 S.F. GROUND FLOOR
5,436 S.F. SECOND FLOOR
19% OFFICE OVERALL
BUILDING B: VN SPRINKLERED
24,183 S.F. GROUND FLOOR
EXISTING PARKING: 12 STALLS
PROPOSED PARKING: 11 EXISTING RESTRIPED W/ 3 ADA STALLS
42 NEW & 18 NEW FLEET PARKING

LEGAL DESCRIPTION

THE NORTH 360 FEET OF THE NORTHWEST QUARTER OF THE NORTHWEST QUARTER OF THE SOUTHWEST QUARTER OF SECTION 21, TOWNSHIP 27 NORTH, RANGE 4 EAST, W.M., IN SNOHOMISH COUNTY, WASHINGTON;

EXCEPT THE NORTH 30 FEET AND THE WEST 30 FEET THEREOF.

SITUATE IN THE COUNTY OF SNOHOMISH, STATE OF WASHINGTON

CORRECTION:

Per submittal checklist:
1. All plans must be COMBINED INTO ONE PLAN SET
2. Need to list future land use designation (FLU)
3. Need to list lot coverage
4. Must list REQUIRED parking, existing parking, and new total of parking after work is complete.

VACINITY MAP

north

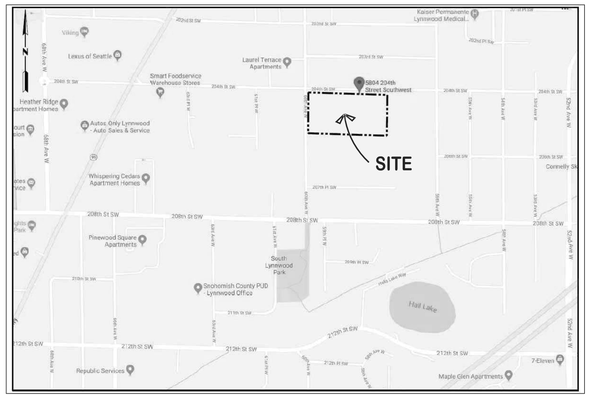

PROJECT SCOPE

CURRENT SITE CONDITION IS UNDEVELOPED IN THE AREA OF THE PROPOSAL EXCEPT FOR AN AREA OF GRAVEL PAVING ALONG THE WEST SIDE OF THE EXISTING WEST STORAGE BUILDING. THE PROPOSAL IS TO PAVE THE SITE FOR PARKING ALONG SW 204th ST AND PAVE THE SITE FOR OUTSIDE STORAGE BETWEEN THE 100FT SETBACK FROM 204th TO THE SOUTH AND FROM THE EXISTING WEST BUILDING TO 60th AVE SW. THE SITE WILL BE FENCED AND LANDSCAPER PER CODE. THE STORM DRAINAGE SYSTEM WILL INCLUDE AN UNDERGROUND STORM WATER VAULT. THE SITE WILL BE LIGHTED WITH FIXTURES HAVING GLARE CUT-OFF SHIELDS, AND LOWEST LIGHTING LEVELS NEEDED FOR BASIC SECURITY AND FORKLIFT OPERATIONS . THE DETENTION POND IN THE SW CORNER OF THE SITE SERVES THE PUBLIC WORKS DEPT SITE TO THE SOUTH AND IS NOT A PART OF THIS PROPOSAL. ALL NEW PARKING STALLS ARE FOR CURRENT EMPLOYEES CURRENTLY USING STREET PARKING.

TREES TO BE REMOVED

Tree Number (No Tag)	DBH (inches)	Type	Drip (Diameter)
23	14"	Pine	22'
24	12"	Pine	28'
25	12"	Pine	22'
26	11"	Pine	20'
27	10"	Deciduous	32'

PROJECT TEAM

OWNER:
CONAX PROPERTIES USA INC
5804 204TH STREET SW
LYNNWOOD, WA 98036
(604) 591-5381
CONTACT: HUSSAIN KHEATANI

PROJECT ENGINEER:
BARGHAUSEN CONSULTING ENGINEERS, INC
18215 72ND AVE SOUTH
KENT, WA 98032
(425) 251-6222
CONTACT: BAN BALMELLI
DBALMELLI@BARGHAUSEN.COM

TENANT:
CONVOY SUPPLY, INC
5804 204TH STREET SW
LYNNWOOD, WA 98036
(425) 678-4983
CONTACT: MARC STANKEY
MSTANKEY@CONVOY-SUPPLY.COM

LANDSCAPE DESIGNER:
MAIN STREET DESIGN
9402 TIDAL COURT
BAINBRIDGE ISLAND, WA 98110
(206) 842-7886
KEN LONEY
MAIN_STREET@EARTHLINK.COM

PROJECT ARCHITECT:
LANCE MUELLER & ASSOCIATES
130 LAKESIDE AVE #250
SEATTLE, WA 98122
(206) 325-2553
CONTACT: ED MINSHULL
EDM@LMUELLER.COM

INDEX OF DRAWINGS

1/1 TOPOGRAPHIC SURVEY
A1 COVER SHEET / SITE PLAN

no.	revision	date
	DESIGN REVIEW SUBMITTAL	6-30-22

21-048 job no.
EDM drawn
checked
6-30-22 date

REGISTERED ARCHITECT 2396 LANCE P. MUELLER STATE OF WASHINGTON

Proposed Site Plan Modifications for
Convoy Supply, Inc
5804 204th Street SW Lynnwood, Washington

COVER SHEET / SITE PLAN

LANCE MUELLER & ASSOCIATES
ARCHITECTS
130 LAKESIDE • SUITE 250 • SEATTLE, WA 98122 • (206) 325-2553

sheet
A1

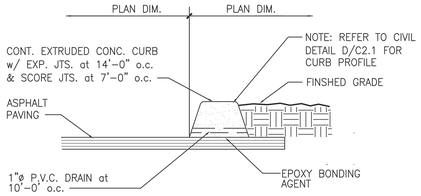

1 EXTRUDED CONC. CURB
SCALE: 1" = 1'-0"

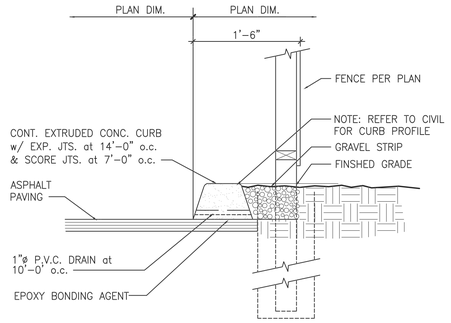

2 C.I.P CURB DETAIL
SCALE: 1" = 1'-0"

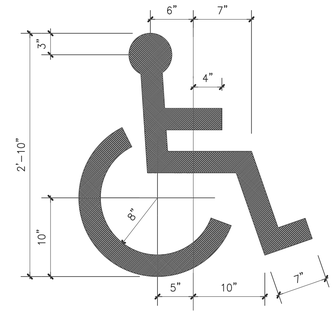

3 H.C. SYMBOL
N.T.S.

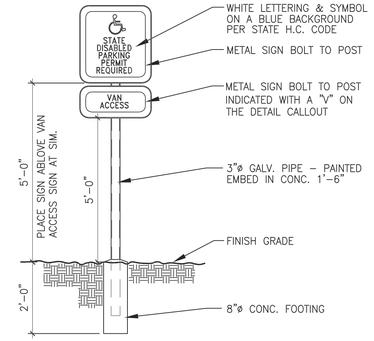

4 H.C. SIGN DETAIL
SCALE: 1/2" = 1'-0"

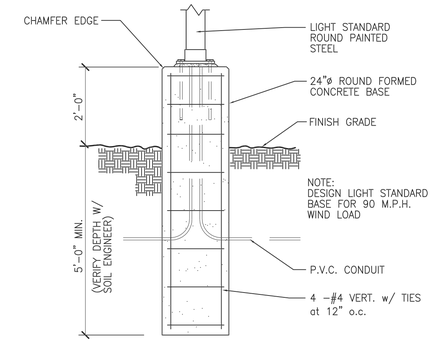

5 LIGHT POLE BASE DETAIL
SCALE: 1/2" = 1'-0"

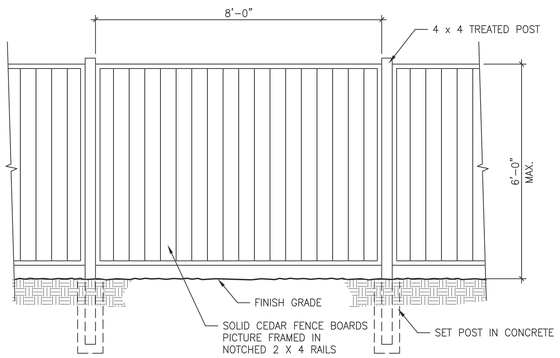

6 FENCE DETAIL
SCALE: 1/2" = 1'-0"

no.	revision	date

job no.
EDM drawn
checked
5-18-22 date

REGISTERED ARCHITECT 2396 LANCE P. MUELLER STATE OF WASHINGTON

Proposed Site Plan Modifications for
Convoy Supply, Inc
5804 204th Street SW Lynnwood, Washington

SITE DETAILS

LANCE MUELLER & ASSOCIATES
ARCHITECTS AIA
1301 LAKESIDE • SUITE 250 • SEATTLE, WA 98122 • (206) 325-2553

sheet
A2

e:\dwg\convoy supply\convoy-01x-v2.dwg
05/20/22