Plan Set Approved for PDR only.
Additional Permits Required

Approved 4/12/22

- Kristen Holdsworth, Senior Planner
kholdsworth@lynnwoodwa.gov

Otak

11241 Willows Road NE, Suite 200
Redmond, WA 98052
425.822.4446
www.otak.com

Swift ORANGE LINE 100% SUBMITTAL

ITB 2021-083

OCTOBER 2021

PDR SUBMITTAL FOR:
EDMONDS COLLEGE
TRANSIT CENTER
(WESTERN TERMINUS)

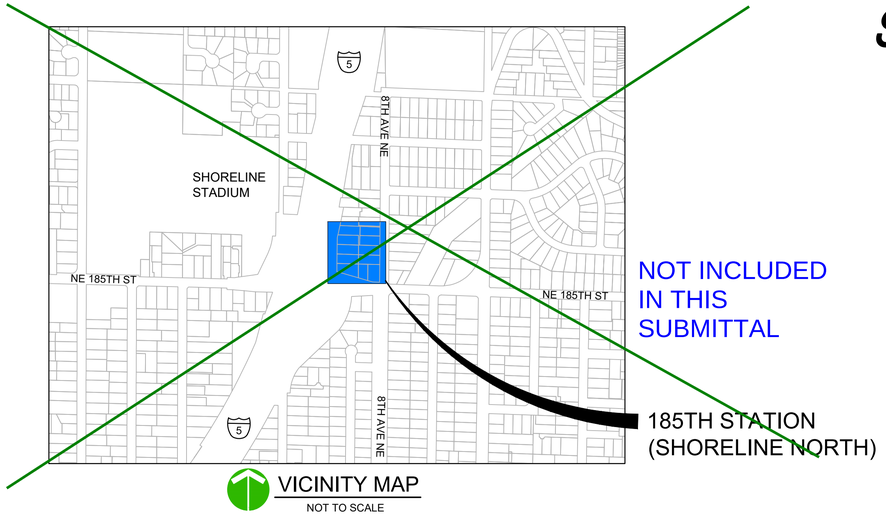

VICINITY MAP
NOT TO SCALE

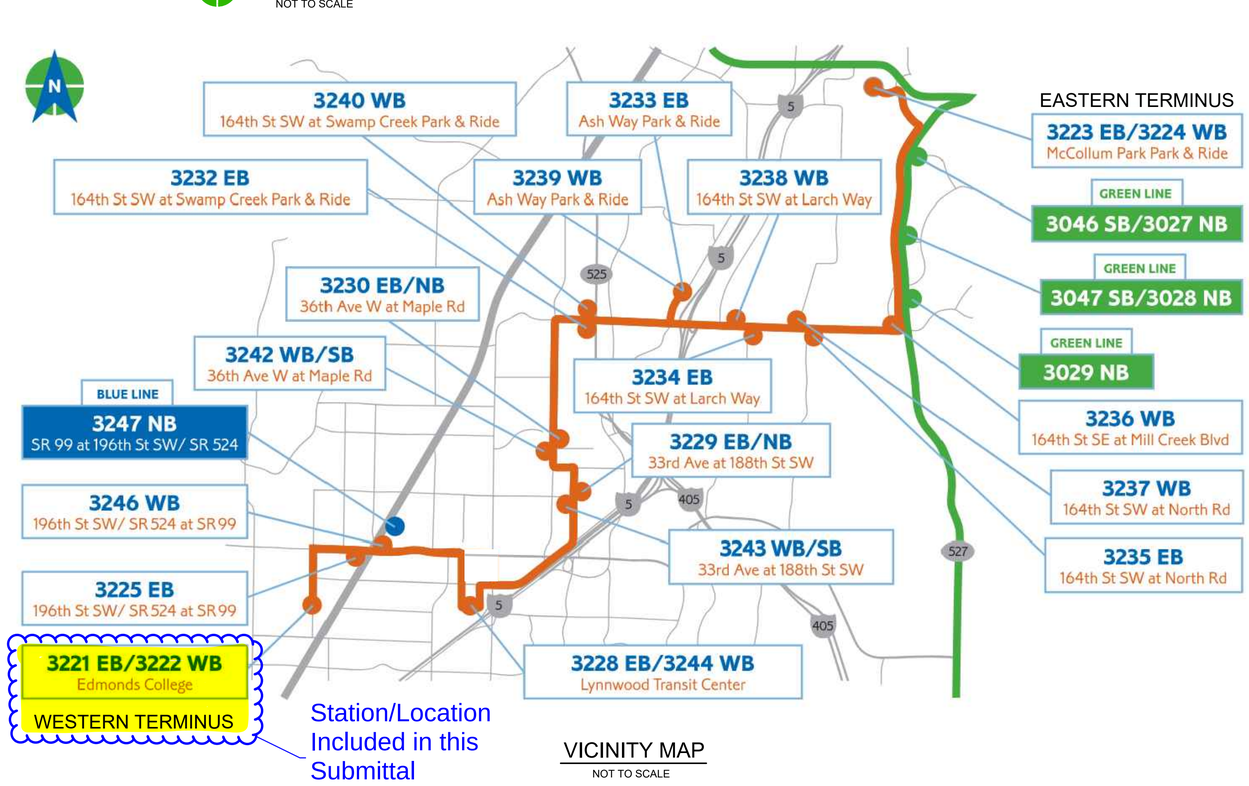

VICINITY MAP
NOT TO SCALE

SHEET INDEX

DRAWING NO.	SHEET NO.	TITLE
C0.001	1	COVER SHEET, VICINITY MAP AND INDEX
C0.002	2	GENERAL NOTES, LEGEND, AND ABBREVIATIONS
C0.003	3	SURVEY CONTROL POINT TABLES
C0.004 - C0.005	4-5	TERMINI OVERVIEW PLANS
C0.100 - C0.109	6-15	STAGING PLANS
C0.200 - C0.218	16-33A	TRAFFIC CONTROL PLANS
C0.300 -C0.311	34-45	CONSTRUCTION ALIGNMENT PLANS
C1.100 - C1.129	46-75	STATION SURVEY CONTROL AND EXISTING CONDITIONS PLANS
C1.200 - C1.205	76-81	INTERSECTION SURVEY CONTROL AND EXISTING CONDITIONS PLANS
C1.300 - C1.307	82-89	TERMINI SURVEY CONTROL AND EXISTING CONDITIONS PLANS
C2.100 - C2.129	90-119	STATION TESC AND DEMOLITION PLANS
C2.200 - C2.205	120-125	INTERSECTION TESC AND DEMOLITION PLANS
C2.300 - C2.307	126-133	TERMINI TESC AND DEMOLITION PLANS
C2.400	134	TESC AND DEMOLITION DETAILS
C3.100 - C3.129	135-164	STATION SITE GRADING AND PAVING PLANS
C3.200 - C3.205	165-170	INTERSECTION SITE GRADING AND PAVING PLANS
C3.300 - C3.309A	171-180A	TERMINI SITE GRADING AND PAVING PLANS
C3.310 - C3.318	181-188	JOINTING PLANS
C3.400 - C3.404	189-193	SITE GRADING AND PAVING DETAILS
C3.500 - C3.519	194-212A	CURB RAMP & TRAFFIC ISLAND PLANS
C3.600 - C3.601	213-214	ADA PARKING STALL LAYOUTS
C4.100 - C4.129	215-244	STATION UTILITY PLANS
C4.200 - C4.205	245-250	INTERSECTION UTILITY PLANS
C4.300 - C4.307	251-258	TERMINI UTILITY PLANS
C4.400 - C4.429	259-282	STORM DRAINAGE DETAILS
C4.500 - C4.505	283-288	STORM DRAIN PROFILES
C4.600 - C4.603	289-292	UTILITY & SANITARY SEWER PLAN & PROFILES
C5.100 - C5.129	293-322	STATION SIGNING AND STRIPING PLANS
C5.200 - C5.205	323-328	INTERSECTION SIGNING AND STRIPING PLANS
C5.300 - C5.305	329-334	TERMINI SIGNING AND STRIPING PLANS
C5.400 - C5.406	335-341	SIGNING AND STRIPING DETAILS
C6.100 - C6.129	342-371	STATION LANDSCAPING PLANS
C6.200 - C6.205	372-377	INTERSECTION LANDSCAPING PLANS
C6.300 - C6.307	378-385	TERMINI LANDSCAPING & HARDSCAPING PLANS
C6.310 - C6.315	386-391	TERMINI IRRIGATION PLANS
C6.400 - C6.407	392-399	LANDSCAPING & HARDSCAPING DETAILS
C6.500	400	PROJECT-WIDE PLANTING SCHEDULE
C6.501	401	MITIGATION PLANTING PLAN
C6.502 - C6.503	402-403	IRRIGATION DETAILS
W0.1 - W0.5	404-408	WALL AND SPECIAL POLE FOUNDATION SITE PLANS
W1.1 - W1.3	409-411	STATION WALL LAYOUT
W1.4 - W1.8	412-415A	TERMINI WALL LAYOUT
W2.1 - W2.4	416-419	REINFORCED CONCRETE WALL DETAILS
W3.1 - W3.2	420-421	STRUCTURAL EARTH WALL DETAILS
W4.1 - W4.3	422-424	MISCELLANEOUS WALL DETAILS
W5.1 - W5.4	425-428	POLE FOUNDATION DETAILS
A1.100 - A1.503	429-455	ORANGE LINE PLATFORM ARCHITECTURAL PLANS
A2.100 - A2.301	456-464	STATION RETROFIT PLATFORM ARCHITECTURAL PLANS
A3.100 - A3.301	465-468	LYNNWOOD TRANSIT CENTER PLATFORM & ARCHITECTURAL PLANS
A4.100	469	STATION PLATFORM & GRAPHICS PLAN DETAILS
A5.100	470	WINDSCREEN CONFIGURATIONS
A6.100 - A6.102	471-473	STATION RAILING ELEVATIONS
A7.100	474	STATION RAILING DETAILS
S1.1 - S2.10	475-487	STATION SHELTER & AMENITIES
S3.1 - S6.9	488-508	STATION SHELTER & AMENITIES INSTALLATION
E1.1 - E1.6	509-514	STATION SHELTER ELECTRICAL PLANS
TS-0.00	515	TRAFFIC SIGNAL & ILLUMINATION PLANS - GENERAL NOTES
TS-1.11 - TS-1.53	516-525	TRAFFIC SIGNAL & ILLUMINATION PLANS - EDMONDS COLLEGE TERMINUS
TS-2.11 - TS-2.52	526-534	TRAFFIC SIGNAL & ILLUMINATION PLANS - 196TH ST SW & SR 99
TS-3.11	535	TRAFFIC SIGNAL & ILLUMINATION PLANS - LYNNWOOD TRANSIT CENTER
TS-4.11 - TS-4.21	536-537	TRAFFIC SIGNAL & ILLUMINATION PLANS - 33RD AVE W & ALDERWOOD MALL BLVD
TS-5.11 - TS-5.51	538-543	TRAFFIC SIGNAL & ILLUMINATION PLANS - 36TH AVE W & MAPLE RD
TS-6.11 - TS-6.51	544-551	TRAFFIC SIGNAL & ILLUMINATION PLANS - 164TH ST SW & WILDWOOD DR (SWAMP CREEK P&R)
IN-6.11 - IN-6.12	552-553	TEMP. TRAFFIC SIGNAL & ILLUMINATION PLANS - 164TH ST SW & WILDWOOD DR (SWAMP CREEK P & R)
TS-7.11 - TS-7.51	554-564	TRAFFIC SIGNAL & ILLUMINATION PLANS - ASH WAY PARK & RIDE
IN-7.11 - IN-7.12	565-566	TEMP. TRAFFIC SIGNAL & ILLUMINATION PLANS - ASH WAY PARK & RIDE
TS-8.11 - TS-8.51	567-574	TRAFFIC SIGNAL & ILLUMINATION PLANS - 164TH ST SW & ASH WAY
IN-8.11 - IN-8.12	575-576	TEMP. TRAFFIC SIGNAL & ILLUMINATION PLANS - 164TH ST SW & ASH WAY
TS-9.11 - TS-9.51	577-583	TRAFFIC SIGNAL & ILLUMINATION PLANS - 164TH ST SW & I-5 SB RAMPS
TS-10.11 - TS-10.51	584-589	TRAFFIC SIGNAL & ILLUMINATION PLANS - 164TH ST SW & I-5 NB RAMPS
TS-11.11 - TS-11.21	590-591	TRAFFIC SIGNAL & ILLUMINATION PLANS - 164TH ST SW & LARCH WAY
TS-12.11 - TS-12.52	592-600	TRAFFIC SIGNAL & ILLUMINATION PLANS - 164TH ST SW & NORTH RD
IN-12.11 - IN-12.12	601-602	TEMP. TRAFFIC SIGNAL & ILLUMINATION PLANS - 164TH ST SW & NORTH ROAD
TS-13.11 - TS-13.51	603-608	TRAFFIC SIGNAL & ILLUMINATION PLANS - 164TH ST SE & MILL CREEK BLVD
IN-13.11 - IN-13.12	609-610	TEMP. TRAFFIC SIGNAL & ILLUMINATION PLANS - 164TH ST SE & MILL CREEK BLVD
TS-14.11 - TS-14.35	611-622	TRAFFIC SIGNAL & ILLUMINATION PLANS - MCCOLLUM PARK VICINITY

PDR-009731-2021

COMMUNITY TRANSIT CONTACTS

NAME	PHONE
TODD JACOBS	(425) 348-2367

PROJECT CONTACTS

NAME	AGENCY	PHONE
WINDI SHAPLEY	OTAK	(425) 822-4446

AGENCY CONTACTS

AGENCY	NAME	PHONE
ALDERWOOD WTR & WSTWTR	JOHN MCCLELLAN	(425) 743-4605
CENTURY LINK	BETH TAN	(206) 660-6330
COMCAST	SHANE TURNER	(425) 263-5348
ZIPLY	TIM RENNICK	(425) 263-4025
ZAYO	JASON TESDAL	(253) 221-7585
PSE GAS	ERIC LIAW	(425) 495-3297
SILVER LAKE WATER DIST.	SCOTT SMITH	(425) 659-2302
SNO. CO. PUD #1	J.C. DAHLBECK	(425) 783-4489
BLACK ROCK CABLE (WAVE)	GARY VERVALIN	(360) 630-8499
MCI/VERIZON	SCOTT CHRISTENSON	(425) 471-1079
NORTHWEST PIPELINE	DAN DAY	(360) 348-9858
CITY OF MILL CREEK	TOM ROGERS	(425) 921-5721
CITY OF LYNNWOOD	KRISTEN HOLDSWORTH	(425) 670-5409
SNOHOMISH COUNTY PARKS	JAMES YAP	(425) 388-6610
SNOHOMISH COUNTY PDS	BRIAN FARRELL	(425) 262-2192
SNOHOMISH CO. DEPT OF PUBLIC WORKS	HEATHER NOBLE	(425) 388-3789
WSDOT	PETER ALM	(206) 440-4711
EDMONDS COLLEGE	STEPHANIE TEACHMAN	(425) 640-1495

SURVEY MAPPING NOTES

1. THE BASIS OF BEARING FOR THIS SURVEY IS THE WASHINGTON COORDINATE SYSTEM OF 1983, NORTH ZONE, NAD 83/11.
2. THE VERTICAL DATUM FOR THIS SURVEY IS NAVD 88.
3. THIS PROJECT IS ON GROUND COORDINATES. THE COMBINED SCALE FACTOR IS 1.000061821.
4. THE FIELD MEASUREMENTS FOR THIS SURVEY WAS PERFORMED USING A TRIMBLE R8S GPS RECIEVER AND A TRIMBLE SX10 TOTAL STATION. THIS SURVEY COMPLIES WITH THE MINIMUM REQUIRED "ERROR OF CLOSURE" OF 1:10,000 FOR WASHINGTON STATE PLANE COORDINATES AS SET FORTH PER W.A.C. 332-130-090 (AND POSITIONAL TOLERANCE LEVELS OF LESS THAN 0.011 METERS).
5. ALL LOCATIONS OF EXISTING UTILITIES SHOWN HEREON HAVE BEEN ESTABLISHED BY FIELD SURVEY OF ABOVE GROUND FACILITIES AND LOCATE MARKS DONE BY APS INC. OR OBTAINED FROM AVAILABLE RECORDS AND SHOULD THEREFORE BE CONSIDERED APPROXIMATE ONLY AND NOT NECESSARILY COMPLETE.
6. TOPOGRAPHIC SURVEY WAS PERFORMED IN 2019 AND REFLECTS THE GENERAL CONDITIONS ON THE GROUND AT THAT TIME.
7. 1 FOOT CONTOUR INTERVALS ARE SHOWN HEREON.
8. SUBSURFACE CONDITIONS WERE NOT EXAMINED OR CONSIDERED AS PART OF THIS SURVEY.
9. 1-800-424-5555 MUST BE CALLED NOT LESS THAN 48 HOURS BEFORE EXCAVATION WHERE ANY UNDERGROUND UTILITIES MAY BE LOCATED.

LEGEND

Lynnwood Edmonds College Terminus

EXISTING	PROPOSED	DESCRIPTION
		RIGHT-OF-WAY LINE
W	W	WATER LINE
		SANITARY SEWER LINE
SD	SD	STORM DRAIN LINE (SOLID)
G		GAS LINE
E	P	POWER LINE
T	T	TELEPHONE/COMMUNICATION LINE
x x	o x	CHAIN LINK FENCE
		GUARDRAIL
		WATER METER
		FIRE HYDRANT
		WATER VALVE
		BLOW OFF ASSEMBLY
		SANITARY MANHOLE
		CLEAN OUT
		STORM DRAIN MANHOLE
		STORM DRAIN CATCH BASIN
		GAS VALVE
		GAS METER
		UTILITY POLE
		GUY ANCHOR
		UTILITY POLE W/ LIGHT
		LIGHT
		STREET LIGHT
		TRAFFIC SIGNAL POLE
		PEDESTRIAN SIGNAL
		TRAFFIC SIGNAL CABINET
		POWER VAULT
		POWER TRANSFORMER
		TELEPHONE VAULT
		TELEPHONE MANHOLE
		TELEPHONE RISER
		ELECTRICAL MANHOLE
		ELECTRICAL HAND HOLE / J-BOX
EM		ELECTRICAL METER
		CABLE TV RISER
		CABLE TV MANHOLE
		SIGN
		RETAINING WALL
		ROCK WALL
		MAIL BOX(ES)
		ASPHALT CONCRETE PAVEMENT
		CEMENT CONCRETE
		CONIFER TREE
		DECIDUOUS TREE
		IRRIGATION CONTROL BOX
		MONITORING WELL
		SURVEY CONTROL POINT
		SURVEY MONUMENT
		FIRE DEPT. CONNECTION
		SIGNAL LIGHT
		WATER MANHOLE
		OIL FILL
		CULVERT

ABBREVIATIONS

ABBREVIATION	NAME OR PHRASE
AB	ANCHOR BOLT
AP	ANGLE POINT
APPROX.	APPROXIMATELY
ASSY	ASSEMBLY
BOW	BOTTOM OF WALL
CB	CATCH BASIN
CLR.	CLEARANCE
CO	CLEAN OUT
CONC.	CONCRETE
CONT.	CONTINUED
CPP	CORRUGATED PLASTIC PIPE
CSBC	CRUSHED SURFACING BASE COURSE
CSTC	CRUSHED SURFACING TOP COURSE
CT	COMMUNITY TRANSIT
DIAM.	DIAMETER
E	EAST
ELEV. or EL.	ELEVATION
EQ.	EQUAL
E.W.	EACH WAY
FL	FLOW LINE (ELEVATION)
FOC	FACE OF CURB
GRD.	GRADE
HMA	HOT MIX ASPHALT
HS	HIGH STRENGTH
HSS	HOLLOW STRUCTURAL SECTION
IE	INVERT ELEVATION
JT.	JOINT
LF	LINEAL FEET
LT	LEFT
MAX.	MAXIMUM
MIC	MONUMENT IN CASE
MIN.	MINIMUM
N	NORTH
NE	NORTHEAST
NO.	NUMBER
NW	NORTHWEST
O.C.	ON CENTER
OHL	OVERHEAD LINE
PC	POINT OF CURVATURE
PCC	POINT OF COMPOUND CURVE
℄	PROP LINE
PRC	POINT OF REVERSE CURVE
PT	POINT OF TANGENCY
RT	RIGHT
R/W	RIGHT-OF-WAY
S	SOUTH
SD	STORM DRAIN
SDCO	STORM DRAIN CLEAN OUT
SE	SOUTHEAST
SS	SANITARY SEWER
STA	STATION
STD	STANDARD
SW	SOUTHWEST
TBD	TO BE DETERMINED
TESC	TEMPORARY EROSION & SEDIMENT CONTROL
TOC	TOP OF CURB
TOW	TOP OF WALL
TYP.	TYPICAL
UNO	UNLESS OTHERWISE NOTED
WSDOT	WA. STATE DEPT. OF TRANSPORTATION
W.S.	WATER SURFACE
W/	WITH

GENERAL PROJECT NOTES

1. REFER TO DIVISION 00 SECTION 3.4 – ORDER OF PRECEDENCE IN THE CONTRACT DOCUMENTS.
2. THE CONTRACTOR SHALL VERIFY ALL EXISTING DATA SHOWN IN THESE DOCUMENTS AND NOTIFY ENGINEER IMMEDIATELY OF ANY CONFLICTS WITH PROPOSED FEATURES PRIOR TO CONSTRUCTION.
3. THE CONTRACTOR SHALL PROTECT ALL AREAS OUTSIDE THE WORK ZONE AND/OR OUTSIDE THE RIGHT-OF-WAY FROM DISTURBANCE. ALL DISTURBED AREAS SHALL BE FULLY RESTORED TO PROPOSED OR PRE-EXISTING CONDITIONS.
4. STORM DRAINAGE (SD) PIPE SHALL BE SCHEDULE A STORM SEWER PIPE UNLESS NOTED OTHERWISE.
5. ALL DRAINAGE STRUCTURE STATION AND OFFSET TO CENTER OF STRUCTURE.
6. ALL COMPACTION METHODS, MATERIALS AND PERFORMANCE CRITERIA SHALL BE IN ACCORDANCE WITH THE PROJECT PLANS AND SPECIFICATIONS.
7. AN APPROVED SET OF CONSTRUCTION PLANS FOR ALL WORK SHALL BE KEPT ON THE CONSTRUCTION SITE AT ALL TIMES.
8. A PRE-CONSTRUCTION CONFERENCE SHALL BE HELD WITH THE APPLICABLE JURISDICTIONS AND COMMUNITY TRANSIT PRIOR TO STARTING ANY CONSTRUCTION ON THE PROJECT.
9. THE SOURCE OF SUPPLY OF EACH OF THE MATERIALS FURNISHED BY THE CONTRACTOR SHALL BE SUBMITTED TO THE ENGINEER FOR APPROVAL PRIOR TO DELIVERY. ONLY MATERIALS CONFORMING TO THE REQUIREMENTS OF THE STANDARD SPECIFICATIONS AND APPROVED BY THE ENGINEER SHALL BE USED IN THE WORK. TESTING OF MATERIALS MAY INCLUDE TESTS OF ACTUAL SAMPLES, MANUFACTURER'S CERTIFICATIONS, APPROVAL OF CATALOG CUTS, OR FIELD ACCEPTANCE REPORTS.
10. ALL LOCATIONS OF EXISTING UTILITIES SHOWN HERE UPON HAVE BEEN ESTABLISHED BY FIELD SURVEY OR OBTAINED FROM AVAILABLE RECORDS AND SHOULD THEREFORE BE CONSIDERED APPROXIMATE ONLY AND NOT NECESSARILY COMPLETE. IT IS THE SOLE RESPONSIBILITY OF THE CONTRACTOR TO INDEPENDENTLY VERIFY THE ACCURACY OF ALL UTILITY LOCATIONS SHOWN AND FURTHER DISCOVER AND AVOID ANY OTHER UTILITIES NOT SHOWN HERE UPON WHICH MAY BE AFFECTED BY THE IMPLEMENTATION OF THE PLAN. UTILITIES WHICH ARE NOT ABANDONED OR REMOVED SHALL BE PROTECTED, SUPPORTED, OR MAINTAINED DURING CONSTRUCTION. THE CONTRACTOR SHALL CONTACT THE UNDERGROUND UTILITIES LOCATIONS SERVICE (811) AT LEAST 48 HOURS PRIOR TO CONSTRUCTION. THE OWNER AND THE ENGINEER SHALL BE CONTACTED IMMEDIATELY IF A CONFLICT EXISTS.
11. STORM DRAINAGE PIPE LENGTHS SHOWN IN PLAN AND PROFILE ARE MEASURED CENTER OF STRUCTURE TO CENTER OF STRUCTURE.
12. 1-800-424-5555 MUST BE CALLED NOT LESS THAN 48 HOURS BEFORE EXCAVATION WHERE ANY UNDERGROUND UTILITIES MAY BE LOCATED.

CLEARING, GRADING AND TEMPORARY EROSION CONTROL

1. THE SEDIMENT CONTROL BEST MANAGEMENT PRACTICES (BMPS) SHOWN IN THESE PLANS SHALL BE CONSTRUCTED AND FUNCTIONAL BEFORE ANY CLEARING OR GRUBBING CAN BEGIN.
2. CONSTRUCTION SHALL BE PHASED TO MINIMIZE THE EXTENT AND DURATION THAT ANY AREA IS EXPOSED.
3. INLET PROTECTION SHALL BE INSTALLED ON ALL EXISTING AND PROPOSED STORM DRAIN CATCH BASINS AND INLETS AT THE PROJECT SITE. WITHIN CITY OF LYNNWOOD LIMITS, INLET PROTECTION SHALL BE INSTALLED ON ALL EXISTING AND PROPOSED STORM DRAINAGE CATCH BASINS AND INLET WITHIN 500-FEET OF THE PROJECT SITE.
4. ALL CONSTRUCTION ACCESS LOCATIONS SHALL BE STABILIZED PRIOR TO BEGINNING CLEARING AND GRADING ACTIVITIES TO MINIMIZE THE TRACKING OF SEDIMENT ONTO PUBLIC ROADS. IF SEDIMENT IS TRANSPORTED ONTO A ROAD SURFACE, THE ROAD SHALL BE CLEANED THOROUGHLY WITH SELF-PROPELLED PICKUP STREET SWEEPER. STREET WASHING WITH WATER WILL NOT BE PERMITTED.
5. ALL TEMPORARY AND PERMANENT EROSION AND SEDIMENT CONTROL BMPS SHALL BE MAINTAINED AND REPAIRED AS NEEDED TO ASSURE CONTINUED PERFORMANCE OF THEIR INTENDED FUNCTION UNLESS OTHERWISE SPECIFIED. WHEN THE DEPTH OF ACCUMULATED SEDIMENT AND DEBRIS REACHES APPROXIMATELY ONE-THIRD THE HEIGHT OF THE BMP THE DEPOSITS SHALL BE REMOVED AND LEGALLY DISPOSED OF OFFSITE. VISUAL MONITORING OF THE BMPS WILL BE CONDUCTED BY THE CONTRACTOR'S ESC LEAD AT LEAST ONCE EVERY CALENDAR WEEK AND WITHIN 24 HOURS OF ANY RAINFALL EVENT.
6. ALL TEMPORARY EROSION AND SEDIMENT CONTROL BMPS SHALL BE REMOVED WITHIN 30 DAYS AFTER FINAL SITE STABILIZATION IS ACHIEVED OR WHEN THE ENGINEER DETERMINES THAT THE TEMPORARY BMP IS NO LONGER NEEDED. THE CONTRACTOR SHALL REMOVE THE ITEM, THEN CLEAN, RESTORE AND PERMANENTLY STABILIZE ALL DISTURBED AREAS TO THE ENGINEER'S SATISFACTION. TRAPPED SEDIMENT SHALL BE REMOVED OR STABILIZED ON SITE.
7. THIS PLAN MAY BE MODIFIED BY THE CONTRACTOR'S ESC LEAD OR THE ENGINEER IN THE FIELD AS NECESSARY TO CONTROL EROSION AND THE MIGRATION OF SEDIMENTS AT THE PROJECT SITE.
8. PROPOSED CATCH BASINS SHALL BE LEFT LOW TO DRAIN AND RAISED AT THE TIME OF FINAL LIFT.
9. ALL TEMPORARY EROSION AND SEDIMENT CONTROL WORK COMPLETED WITHIN THE CITY OF LYNNWOOD SHALL COMPLY WITH THE CITY'S TESC NOTES WHICH CAN BE FOUND USING THE LINK BELOW: https://www.lynnwoodwa.gov/files/sharedassets/public/public-works/standard-plans/standard-plan-notes/standard-plans-tesc-notes.pdf

CALL BEFORE YOU DIG 1-800-424-5555

LLI Submittal, 3/22/2022

NO.	REVISION COMMENTS	BY	REVIEW	DATE

DESIGNER | DRAWN BY | CHECKED BY

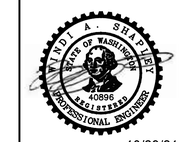

10/29/21

communitytransit
Swift ORANGE LINE – 100% SUBMITTAL
GENERAL NOTES, LEGEND, AND ABBREVIATIONS

TITLE

Otak
11241 Willows Road NE, Suite 200
Redmond, WA 98052
425.822.4446
www.otak.com

32880.H
PROJECT NUMBER

C0.002
DRAWING NO.

SHEET 2 OF 622

© 2021 OTAK, INC.

Plotted: Oct 29, 2021 - 1:05pm K:\Project\32800\32880H\CADD\ACAD\Dwg\C0.002.dwg Layout Name: C0.002

SURVEY CONTROL

POINT #	NORTHING	EASTING	ELEVATION	DESCRIPTION
140	313306.82	1290407.34	463.82	PK NAIL W/OTAK WASHER
141	313290.02	1290522.10	470.24	PK NAIL W/OTAK WASHER
142	313208.26	1290494.96	468.73	TACK W/OTAK WASHER
143	313201.52	1290381.22	461.71	TACK W/OTAK WASHER
202	324231.62	1300403.89	401.04	NE WAS 2
210	303008.10	1276988.05	383.59	TACK W/OTAK WASHER
500	305412.98	1285866.16	398.32	1" BRASS DISK STAMPED "OTAK CONTROL"
502	305194.98	1285693.85	403.01	1" BRASS DISK STAMPED "OTAK CONTROL"
503	305704.70	1285754.33	404.44	1" BRASS DISK STAMPED "OTAK CONTROL"
902	313352.80	1286801.02	485.64	BENCHMARK – 3" BRASS CAP IN CONCRETE – WSDOT MON ID 623
903	313520.06	1286244.61	528.48	PK NAIL W/OTAK WASHER
907	313443.46	1286254.87	523.84	BENCHMARK BRASS CAP
1005	314186.45	1290188.36	464.10	1" BRASS DISK STAMPED "OTAK CONTROL"
1008	314509.14	1290792.29	481.16	1" BRASS DISK STAMPED "OTAK CONTROL"
1009	314249.42	1290522.14	473.41	1" BRASS DISK STAMPED "OTAK CONTROL"
1010	313229.12	1289828.10	421.17	1" BRASS DISK STAMPED "OTAK CONTROL"
1027	314789.85	1290875.44	484.57	REBAR W/RED OTAK CONTROL CAP
1031	313160.72	1289967.60	434.39	TACK W/OTAK WASHER
1033	313316.48	1289805.99	419.09	TACK W/OTAK WASHER
1034	313311.88	1290159.40	446.04	TACK W/OTAK WASHER
1300	312904.19	1299956.30	275.55	TACK W/OTAK WASHER
1301	312904.64	1299601.91	266.53	TACK
1504	323406.19	1299880.18	395.21	REBAR W/RED OTAK CONTROL CAP
1510	323549.51	1300374.03	406.38	TACK W/OTAK WASHER
1511	323406.05	1300410.64	409.91	TACK W/OTAK WASHER
1512	323491.90	1300437.40	408.98	TACK W/OTAK WASHER
1901	308509.80	1284841.34	488.42	1" BRASS DISK STAMPED "OTAK CONTROL"
1907	307536.11	1284815.75	494.30	TACK W/OTAK WASHER
5361	313189.75	1290924.33	494.29	BENCHMARK – WSDOT BRASS CAP FLUSH – WSDOT MON ID 5361

SURVEY CONTROL

POINT #	NORTHING	EASTING	ELEVATION	DESCRIPTION
2000	301069.10	1281413.68	360.94	1" BRASS DISK STAMPED "OTAK CONTROL"
2001	301325.30	1281418.40	370.00	1" BRASS DISK STAMPED "OTAK CONTROL"
2002	300957.64	1281239.34	354.76	1" BRASS DISK STAMPED "OTAK CONTROL"
2003	300965.73	1281054.01	351.02	1" BRASS DISK STAMPED "OTAK CONTROL"

NOTES

1. REFER TO SHEET C0.002 FOR SURVEY MAPPING NOTES.
2. REFER TO C1 SERIES PLAN SHEETS FOR ADDITIONAL SURVEY CONTROL POINTS AND TABLES SHOWN IN STATION, INTERSECTION, AND TERMINI PLAN SHEET VIEWS.

CALL BEFORE YOU DIG 1–800–424–5555

DESIGNER	DRAWN BY	CHECKED BY

NO.	REVISION COMMENTS	BY	REVIEW	DATE



9/24/21

communitytransit
Swift ORANGE LINE – 100% SUBMITTAL
SURVEY CONTROL POINT TABLES

TITLE

Otak

11241 Willows Road NE, Suite 200
Redmond, WA 98052
425.822.4446
www.otak.com

32880.H
PROJECT NUMBER

C0.003

DRAWING NO.

SHEET 3 OF 622

© 2021 OTAK, INC.

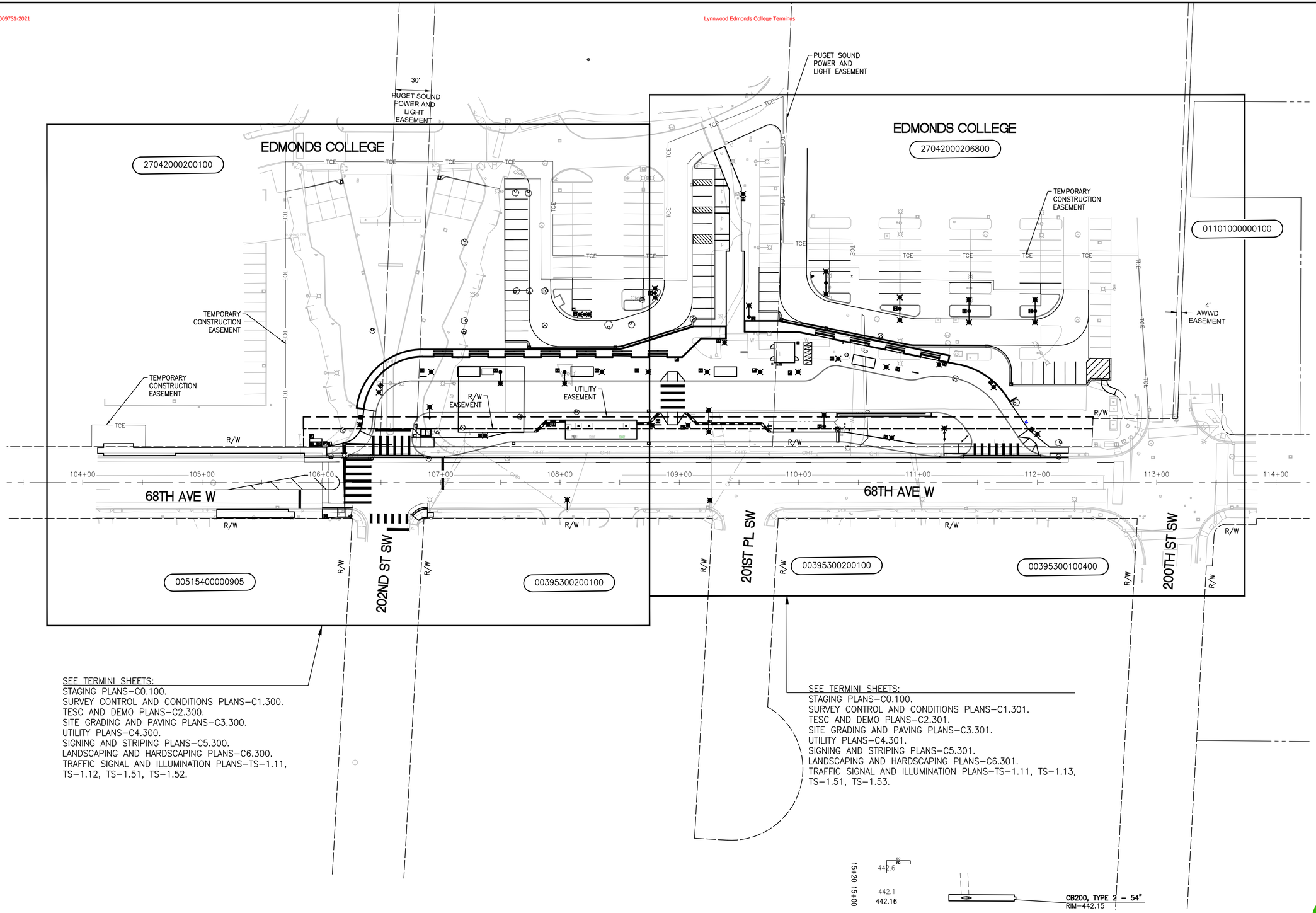

SEE TERMINI SHEETS:
STAGING PLANS–C0.100.
SURVEY CONTROL AND CONDITIONS PLANS–C1.300.
TESC AND DEMO PLANS–C2.300.
SITE GRADING AND PAVING PLANS–C3.300.
UTILITY PLANS–C4.300.
SIGNING AND STRIPING PLANS–C5.300.
LANDSCAPING AND HARDSCAPING PLANS–C6.300.
TRAFFIC SIGNAL AND ILLUMINATION PLANS–TS–1.11, TS–1.12, TS–1.51, TS–1.52.

SEE TERMINI SHEETS:
STAGING PLANS–C0.100.
SURVEY CONTROL AND CONDITIONS PLANS–C1.301.
TESC AND DEMO PLANS–C2.301.
SITE GRADING AND PAVING PLANS–C3.301.
UTILITY PLANS–C4.301.
SIGNING AND STRIPING PLANS–C5.301.
LANDSCAPING AND HARDSCAPING PLANS–C6.301.
TRAFFIC SIGNAL AND ILLUMINATION PLANS–TS–1.11, TS–1.13, TS–1.51, TS–1.53.

40 0 40 80
SCALE IN FEET

CALL BEFORE YOU DIG 1–800–424–5555

NO.	REVISION COMMENTS	BY	REVIEW	DATE

DESIGNER | DRAWN BY | CHECKED BY

KEVIN C. KRAXBERGER, STATE OF WASHINGTON, 39870, REGISTERED PROFESSIONAL ENGINEER
9/24/21

communitytransit
Swift ORANGE LINE – 100% SUBMITTAL
TERMINI OVERVIEW PLANS
WESTERN TERMINUS - EDMONDS COLLEGE
(STATION # EB 3221 & WB 3222)

TITLE

Otak
11241 Willows Road NE, Suite 200
Redmond, WA 98052
425.822.4446
www.otak.com

32880.H
PROJECT NUMBER

C0.004
DRAWING NO.

SHEET 4 OF 622

© 2021 OTAK, INC.

Plotted: Sep 24, 2021 – 10:04am K:\Project\32800\32880H\CADD\ACAD\Dwg\C0.004–C0.005.dwg Layout Name: C0.004

EDMONDS COLLEGE

PUGET SOUND POWER AND LIGHT EASEMENT

27042000200100

BUS LOOP ROUTES # 115 116 120

TEMPORARY CONSTRUCTION EASEMENT

TEMPORARY CONSTRUCTION EASEMENT

R/W EASEMENT

UTILITY EASEMENT

PUGET SOUND POWER AND LIGHT EASEMENT

EDMONDS COLLEGE

27042000206800

TEMPORARY CONSTRUCTION EASEMENT

01101000000100

4' AWWD EASEMENT

68TH AVE W

68TH AVE W

R/W

202ND ST SW

201ST PL SW

200TH ST SW

00515400000905

00395300200100

00395300200100

00395300100400

TCE

OHT

OHP

G

W

LEGEND

PED ACCESS

BUS ACCESS

15-20 | 442.6 | 420 | 425 | 430 | 435 | 440 | 445 | 450 | 455

EXISTING BUS AND PEDESTRIAN ACCESS

40 0 40 80

SCALE IN FEET

CALL BEFORE YOU DIG 1-800-424-5555

NO.	REVISION COMMENTS	BY	REVIEW	DATE

DESIGNER

DRAWN BY

CHECKED BY

JEDIDIAH A. SHAPLEY
STATE OF WASHINGTON
40896
REGISTERED PROFESSIONAL ENGINEER

9/24/21

communitytransit

Swift ORANGE LINE - 100% SUBMITTAL

STAGING PLANS
WESTERN TERMINUS-EDMONDS COLLEGE
(STATION # EB 3221 & WB 3222)

TITLE

Otak
11241 Willows Road NE, Suite 200
Redmond, WA 98052
425.822.4446
www.otak.com

32880 H
PROJECT NUMBER

C0.100
DRAWING NO.

SHEET 6 OF 622

© 2021 OTAK, INC.

Plotted: Sep 24, 2021 - 10:16am K:\Project\32800\32880H\CADD\ACAD\Dwg\C0.100.dwg Layout Name: C0.100

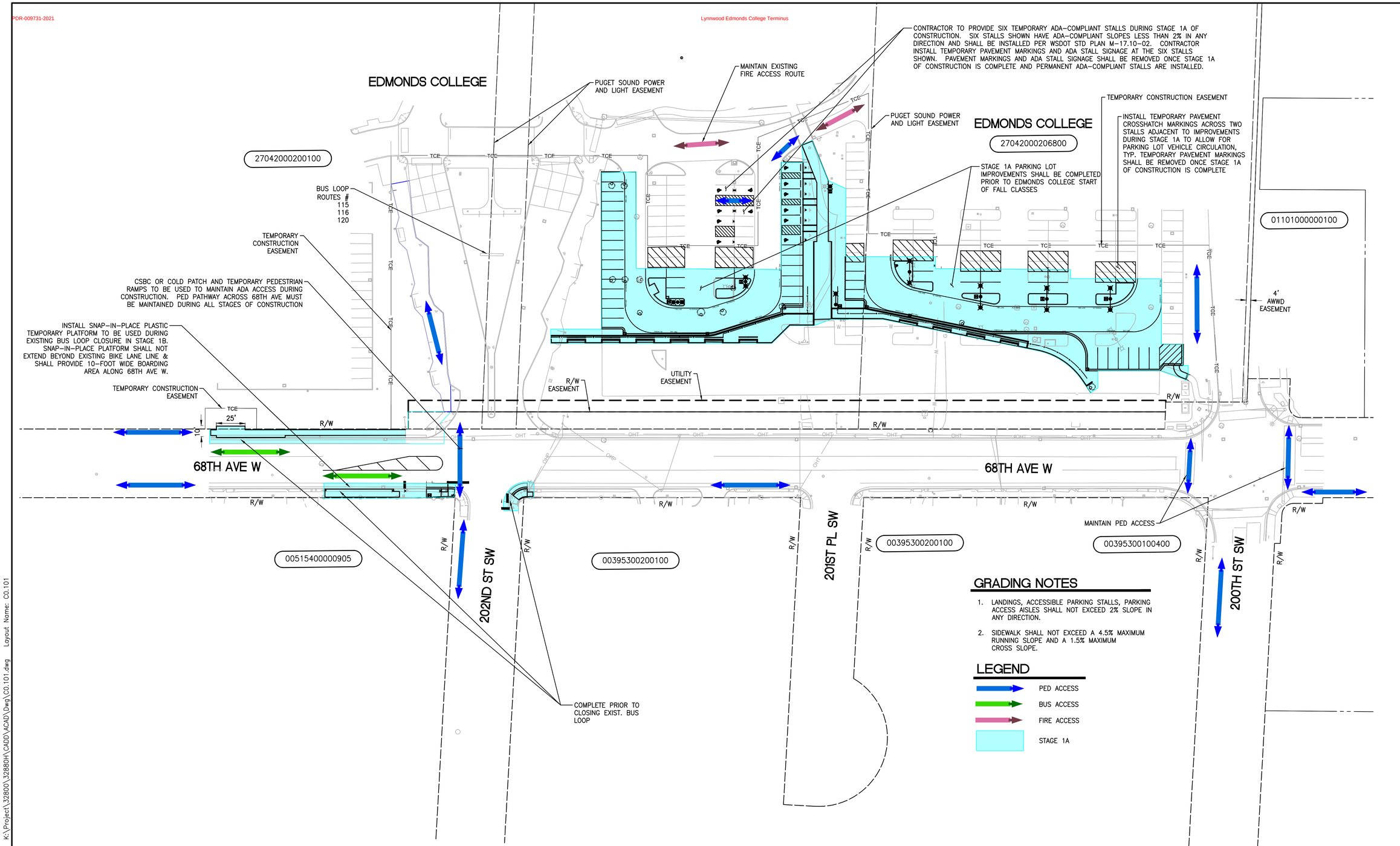

GRADING NOTES

1. LANDINGS, ACCESSIBLE PARKING STALLS, PARKING ACCESS AISLES SHALL NOT EXCEED 2% SLOPE IN ANY DIRECTION.
2. SIDEWALK SHALL NOT EXCEED A 4.5% MAXIMUM RUNNING SLOPE AND A 1.5% MAXIMUM CROSS SLOPE.

LEGEND

- PED ACCESS
- BUS ACCESS
- FIRE ACCESS
- STAGE 1A

CONSTRUCTION STAGING PLAN (STAGE 1A)

40 0 40 80
SCALE IN FEET

CALL BEFORE YOU DIG 1-800-424-5555

DESIGNER	DRAWN BY	CHECKED BY

NO.	REVISION COMMENTS	BY	REVIEW	DATE

9/24/21

communitytransit Swift ORANGE LINE - 100% SUBMITTAL
STAGING PLANS
WESTERN TERMINUS-EDMONDS COLLEGE
(STATION # EB 3221 & WB 3222)

TITLE

Otak
11241 Willows Road NE, Suite 200
Redmond, WA 98052
425.822.4446
www.otak.com

32880.H
PROJECT NUMBER

C0.101
DRAWING NO.

SHEET 7 OF 622

© 2021 OTAK, INC.

Plotted: Sep 24, 2021 - 10:24am K:\Project\32800\32880H\CADD\ACAD\Dwg\C0.101.dwg Layout Name: C0.101

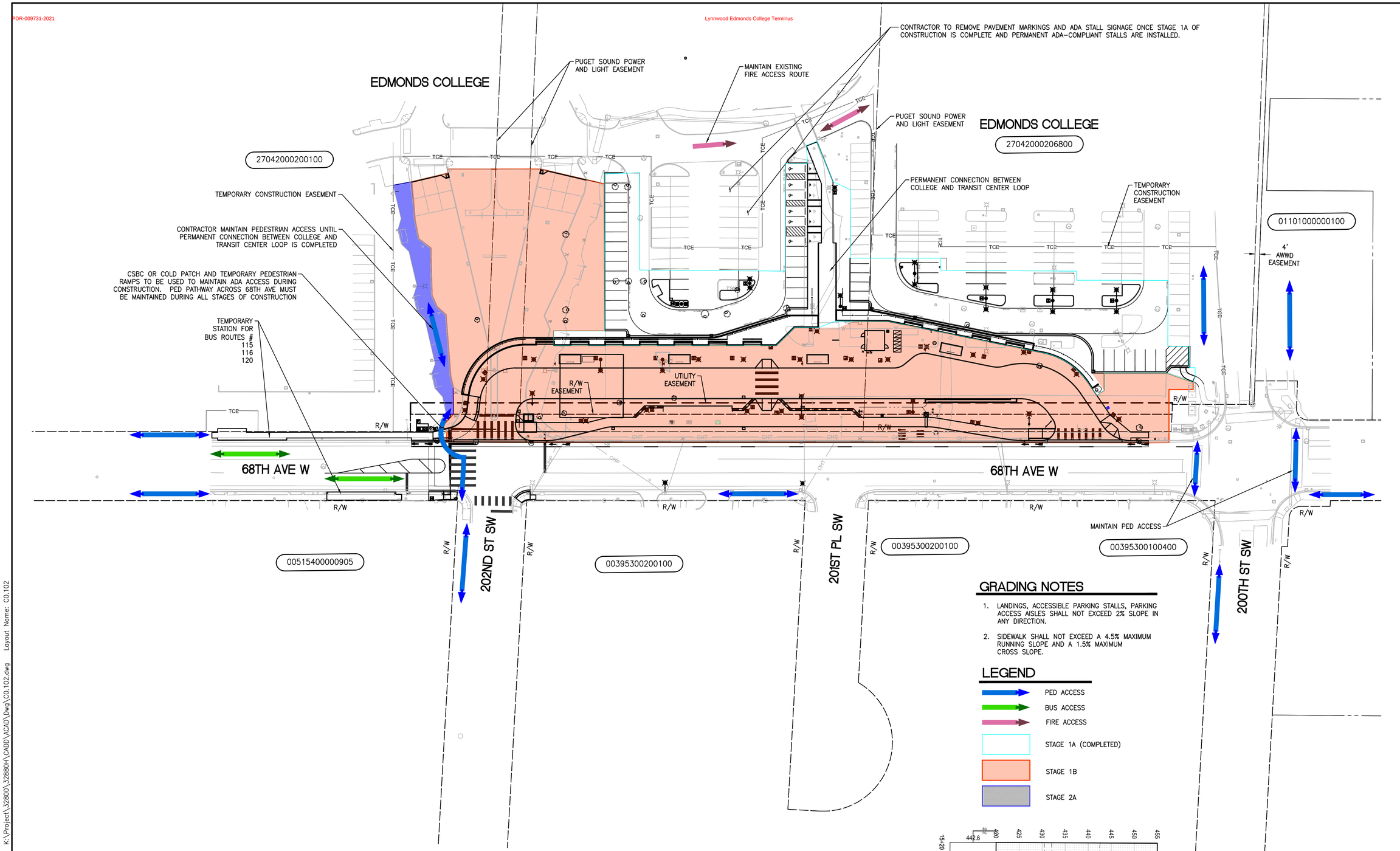

GRADING NOTES

1. LANDINGS, ACCESSIBLE PARKING STALLS, PARKING ACCESS AISLES SHALL NOT EXCEED 2% SLOPE IN ANY DIRECTION.
2. SIDEWALK SHALL NOT EXCEED A 4.5% MAXIMUM RUNNING SLOPE AND A 1.5% MAXIMUM CROSS SLOPE.

LEGEND

- PED ACCESS
- BUS ACCESS
- FIRE ACCESS
- STAGE 1A (COMPLETED)
- STAGE 1B
- STAGE 2A

15+20 442.6 420 425 430 435 440 445 450 455

CONSTRUCTION STAGING PLAN (STAGES 1B AND 2A)

40 0 40 80
SCALE IN FEET

CALL BEFORE YOU DIG 1-800-424-5555

NO.	REVISION COMMENTS	BY	REVIEW	DATE

DESIGNER | DRAWN BY | CHECKED BY

9/24/21

communitytransit Swift ORANGE LINE - 100% SUBMITTAL
STAGING PLANS
WESTERN TERMINUS-EDMONDS COLLEGE
(STATION # EB 3221 & WB 3222)

TITLE

Otak
11241 Willows Road NE, Suite 200
Redmond, WA 98052
425.822.4446
www.otak.com

32880.H
PROJECT NUMBER

C0.102
DRAWING NO.

SHEET 8 OF 622

© 2021 OTAK, INC.

Plotted: Sep 24, 2021 - 10:30am K:\Project\32800\32880H\CADD\ACAD\Dwg\C0.102.dwg Layout Name: C0.102

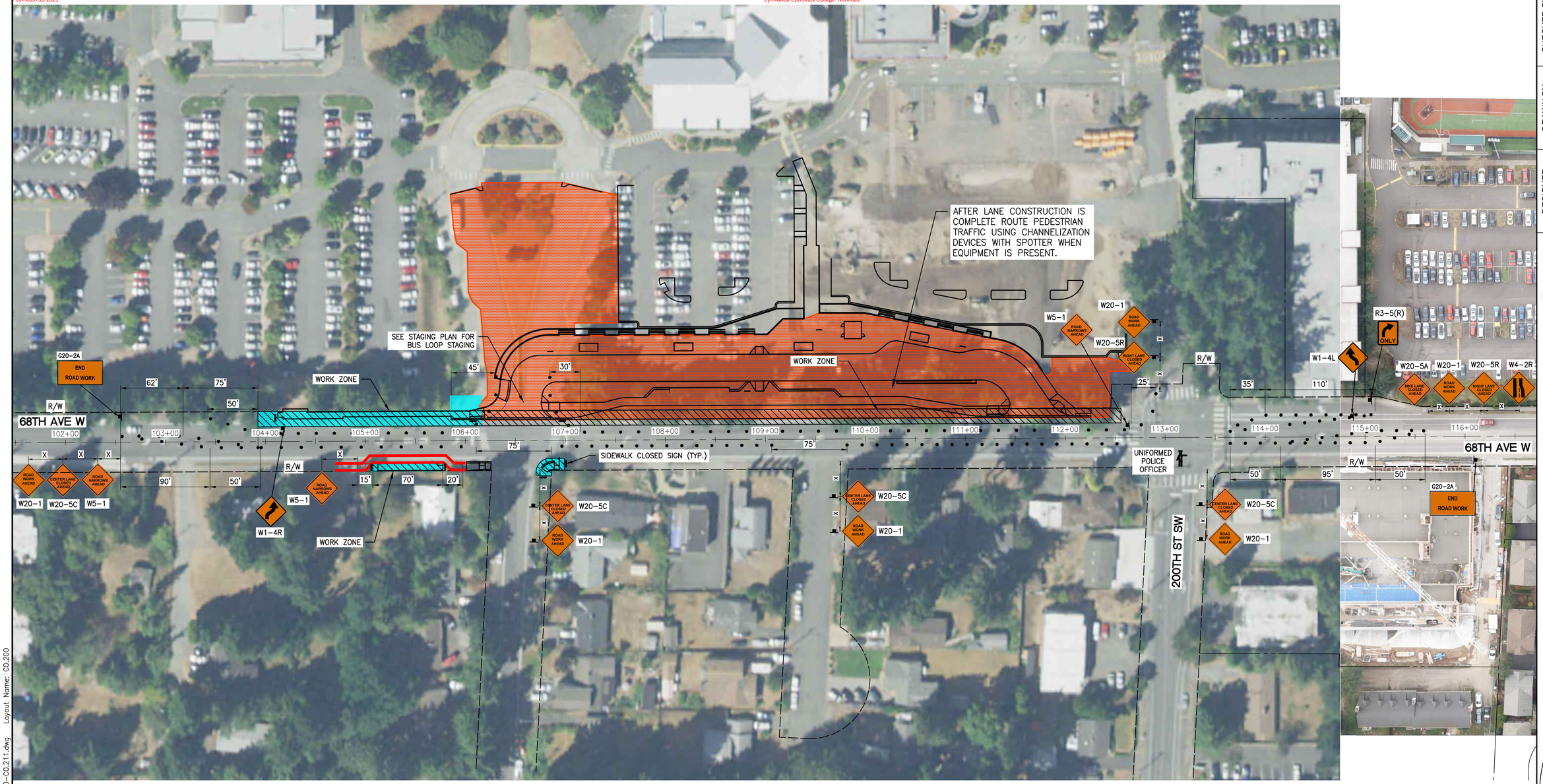

CHANNELIZATION DEVICE SPACING (FEET)		
MPH	TAPER	TANGENT
50/70	40	80
35/45	30	60
25/30	20	40

LEGEND

- WORK AREA
- STAGE 1
- STAGE 2
- UNIFORMED POLICE OFFICER
- SAFETY CONE
- SIDEWALK CLOSED SIGN
- PEDESTRIAN PROTECTION

SIGN SPACING = X (1)		
FREEWAYS & EXPRESSWAYS	55/70 MPH	1500'±
RURAL HIGHWAYS	60/65 MPH	800'±
RURAL ROADS	45/55 MPH	500'±
RURAL ROADS & URBAN ARTERIALS	35/40 MPH	350'±
RURAL ROADS & URBAN ARTERIALS RESIDENTIAL & BUSINESS DISTRICTS	25/30 MPH	200'± (2)
URBAN STREETS	25 MPH OR LESS	100'± (2)

(1) ALL SPACING MAY BE ADJUSTED TO ACCOMMODATE INTERCHANGE RAMPS, AT-GRADE INTERSECTIONS AND DRIVEWAYS.

(2) THIS SPACING MAY BE REDUCED IN URBAN AREAS TO FIT ROADWAY CONDITIONS.

GENERAL NOTES:

1. CHANNELIZATION DEVICES SHALL BE EXTENDED TO A POINT WHERE THEY ARE VISIBLE TO APPROACHING TRAFFIC.
2. ALL SIGNS SHALL BE 48"X48" FOR DIAMOND SHAPED CONSTRUCTION SIGNS, UNLESS OTHERWISE NOTED.
3. LOCAL BUS STOP CLOSURES SHALL BE COORDINATED WITH COMMUNITY TRANSIT.

50 0 50 100
SCALE IN FEET

CALL BEFORE YOU DIG 1-800-424-5555

DESIGNER	DRAWN BY	CHECKED BY
NO.	REVISION COMMENTS	BY	REVIEW	DATE

10/26/21

communitytransit
Swift ORANGE LINE - 100% SUBMITTAL
TRAFFIC CONTROL PLANS
WESTERN TERMINUS - EDMONDS COLLEGE (STATION #3221 & #3222)

TITLE

Otak
11241 Willows Road NE, Suite 200
Redmond, WA 98052
425.822.4446
www.otak.com

32880.H
PROJECT NUMBER

C0.200
DRAWING NO.

SHEET 16 OF 622

© 2021 OTAK, INC.

Plotted: Oct 26, 2021 - 5:56pm C:\temp\AcPublish_12528\C0.200-C0.211.dwg Layout Name: C0.200



1200 0 1200 2400

SCALE IN FEET

CALL BEFORE YOU DIG 1–800–424–5555

NO.	REVISION COMMENTS	BY	REVIEW	DATE

DESIGNER | DRAWN BY | CHECKED BY

LINDA A. SHAPLEY
STATE OF WASHINGTON
40896
REGISTERED
PROFESSIONAL ENGINEER

9/24/21

100% Submittal, 3/22/2022

100% SUBMITTAL

communitytransit

Swift ORANGE LINE

CONSRUCTION ALIGNMENT PLANS

ALIGNMENT OVERVIEW PLAN

TITLE

Otak
11241 Willows Road NE, Suite 200
Redmond, WA 98052
425.822.4446
www.otak.com

32880 H
PROJECT NUMBER

C0.300
DRAWING NO.

SHEET 34 OF 622

© 2021 OTAK, INC.

Plotted: Sep 24, 2021 – 12:56pm K:\Project\32800\32880H\CADD\ACAD\Dwg\C0.300.dwg Layout Name: C0.300



68TH AVE W CCL				
NUMBER	RADIUS	LENGTH	LINE/CHORD DIRECTION	A VALUE
L1		2631.03	N0° 15' 19.00"W	

SR524-196TH ST CCL				
NUMBER	RADIUS	LENGTH	LINE/CHORD DIRECTION	A VALUE
L2		500.00	S87° 53' 49.58"E	

NOTES

1. REFER TO SHEET C0.002 FOR SURVEY MAPPING NOTES.
2. SEE C1 SERIES FOR SURVEY CONTROL DATA.

100 0 100 200

SCALE IN FEET

CALL BEFORE YOU DIG 1-800-424-5555

DESIGNER	DRAWN BY	CHECKED BY

NO.	REVISION COMMENTS	BY	REVIEW	DATE

10/1/21

communitytransit

Swift ORANGE LINE - 100% SUBMITTAL

CONSRUCTION ALIGNMENT PLANS

TITLE

Otak

11241 Willows Road NE, Suite 200
Redmond, WA 98052
425.822.4446
www.otak.com

32880.H

PROJECT NUMBER

C0.301

DRAWING NO.

SHEET 35 OF 622

© 2021 OTAK, INC.

Plotted: Oct 01, 2021 - 11:40am K:\Project\32800\32880H\CADD\ACAD\Dwg\C0.301-C0.312.dwg Layout Name: C0.301

PDR-009731-2021

Lynnwood Edmonds College Terminal

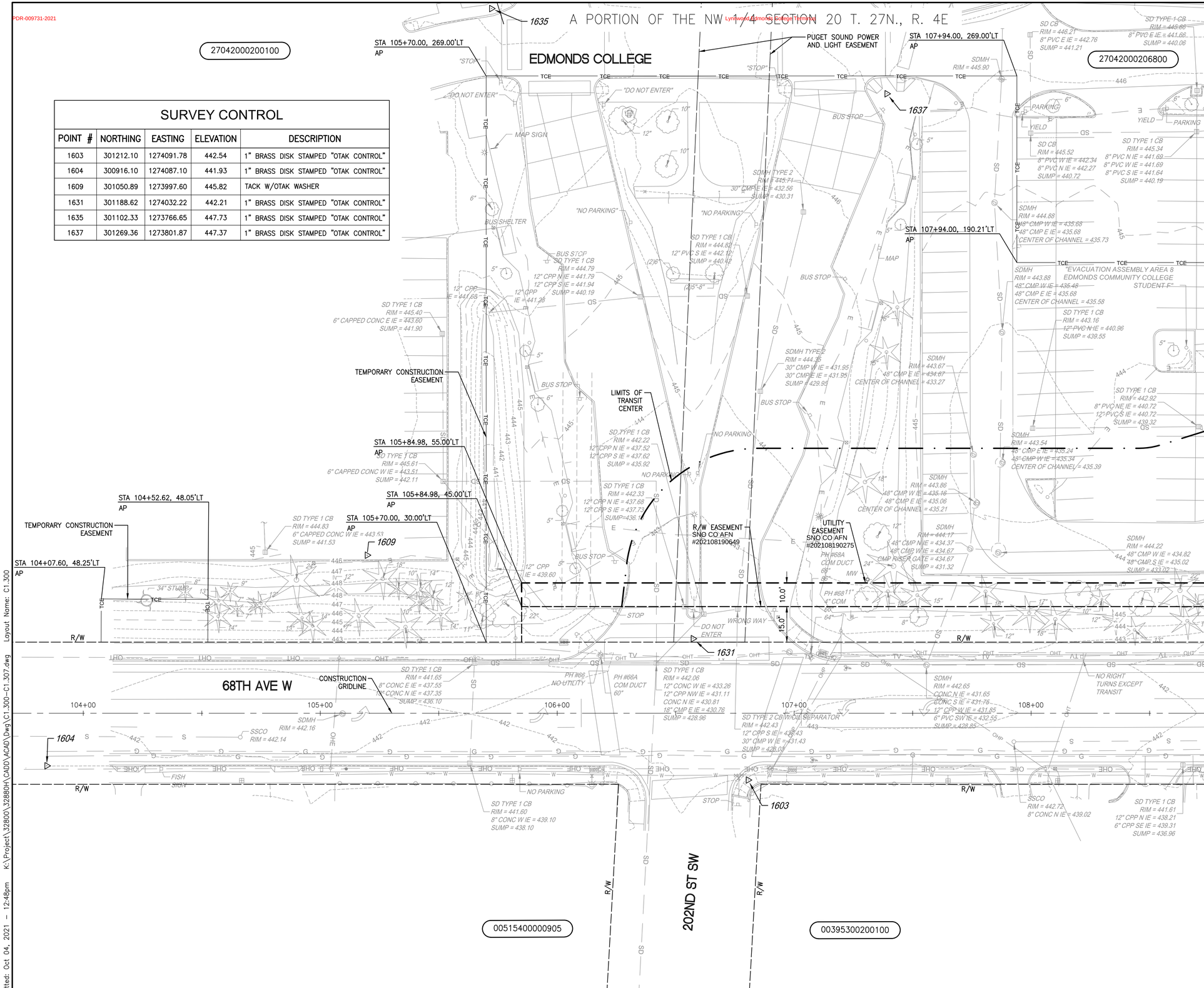

SURVEY CONTROL

POINT #	NORTHING	EASTING	ELEVATION	DESCRIPTION
1603	301212.10	1274091.78	442.54	1" BRASS DISK STAMPED "OTAK CONTROL"
1604	300916.10	1274087.10	441.93	1" BRASS DISK STAMPED "OTAK CONTROL"
1609	301050.89	1273997.60	445.82	TACK W/OTAK WASHER
1631	301188.62	1274032.22	442.21	1" BRASS DISK STAMPED "OTAK CONTROL"
1635	301102.33	1273766.65	447.73	1" BRASS DISK STAMPED "OTAK CONTROL"
1637	301269.36	1273801.87	447.37	1" BRASS DISK STAMPED "OTAK CONTROL"

NOTES

1. REFER TO SHEET C0.002 FOR SURVEY MAPPING NOTES.
2. FOR POINTS NOT SHOWN ON THE C1-SERIES PLAN SHEETS, REFER TO SHEET C0.003 FOR SURVEY CONTROL POINT TABLES.
3. SEE SHEETS C0.300-C0.311 FOR CONSTRUCTION ALIGNMENT DETAILS.

LEGEND

- CONSTRUCTION GRIDLINE
- EXISTING R/W
- EXISTING EASEMENT
- R/W EASEMENT
- EXISTING PROPERTY LINE
- PERMANENT EASEMENT
- UTILITY EASEMENT
- TCE — TEMPORARY CONSTRUCTION EASEMENT
- LIMITS OF TRANSIT CENTER/PARK AND RIDE
- SURVEY CONTROL POINT

20 0 20 40

SCALE IN FEET

CALL BEFORE YOU DIG 1-800-424-5555

NO.	REVISION COMMENTS	BY	REVIEW	DATE

DESIGNER | DRAWN BY | CHECKED BY

JON M. YAMASHITA, STATE OF WASHINGTON, 36814, REGISTERED PROFESSIONAL LAND SURVEYOR — 10/4/21

KEVIN C. KRAXBERGER, STATE OF WASHINGTON, 39870, REGISTERED PROFESSIONAL ENGINEER — 9/30/21

communitytransit Swift ORANGE LINE - 100% SUBMITTAL
TERMINI SURVEY CONTROL AND EXISTING CONDITIONS PLANS
WESTERN TERMINUS-EDMONDS COLLEGE
(STATION # EB 3221 & WB 3222)

TITLE

Otak

11241 Willows Road NE, Suite 200
Redmond, WA 98052
425.822.4446
www.otak.com

32880.H
PROJECT NUMBER

C1.300

DRAWING NO.

SHEET 82 OF 622

© 2021 OTAK, INC.

Plotted: Oct 04, 2021 - 12:48pm K:\Project\32800\32880H\CADD\ACAD\Dwg\C1.300-C1.307.dwg Layout Name: C1.300

PDR-009731-2021

Lynnwood Edmonds College Terminus

Plotted: Oct 04, 2021 – 12:49pm K:\Project\32800\32880H\CADD\ACAD\Dwg\C1.300-C1.307.dwg Layout Name: C1.301

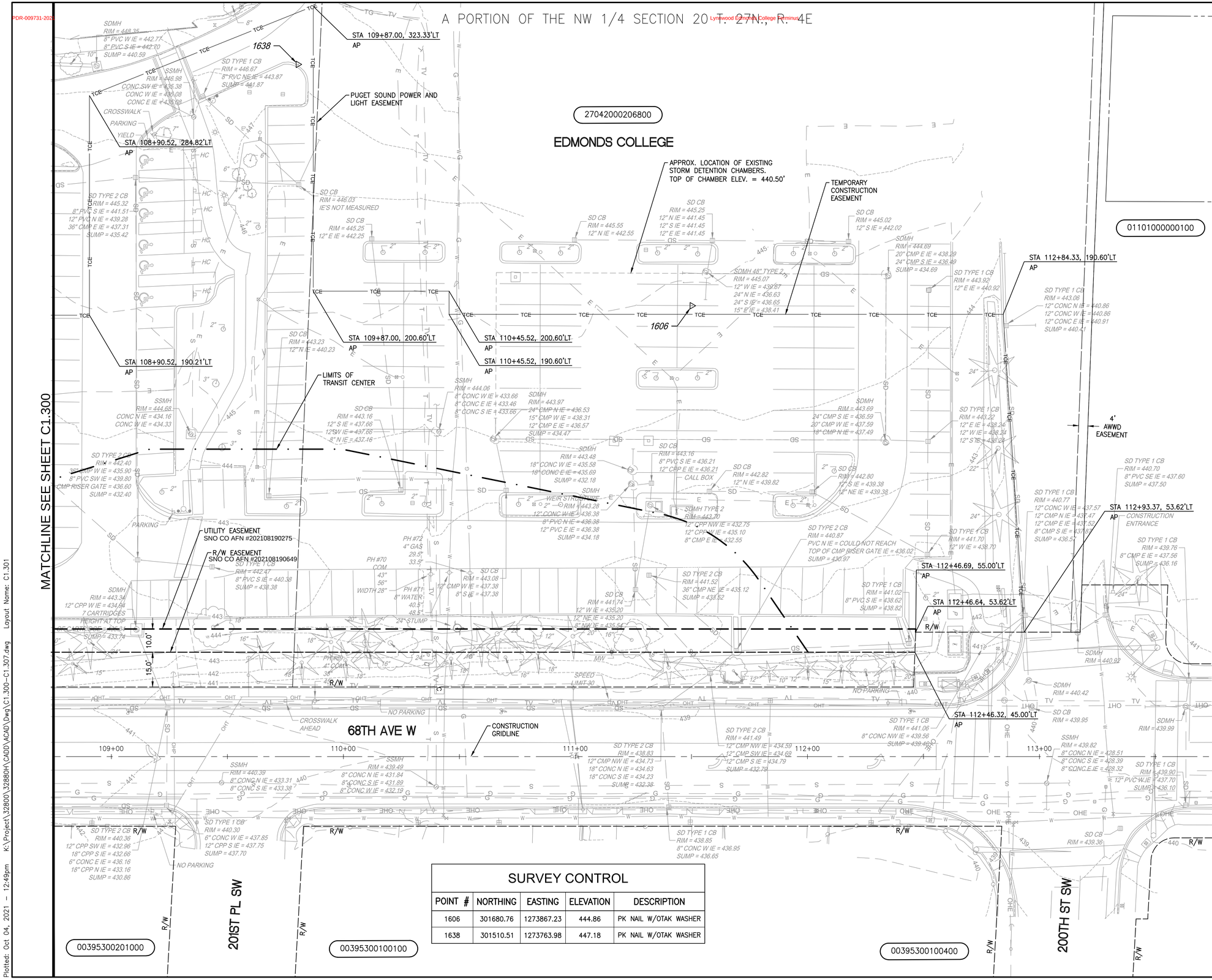

SURVEY CONTROL

POINT #	NORTHING	EASTING	ELEVATION	DESCRIPTION
1606	301680.76	1273867.23	444.86	PK NAIL W/OTAK WASHER
1638	301510.51	1273763.98	447.18	PK NAIL W/OTAK WASHER

NOTES

1. REFER TO SHEET C0.002 FOR SURVEY MAPPING NOTES.
2. FOR POINTS NOT SHOWN ON THE C1-SERIES PLAN SHEETS, REFER TO SHEET C0.003 FOR SURVEY CONTROL POINT TABLES.
3. SEE SHEETS C0.300-C0.311 FOR CONSTRUCTION ALIGNMENT DETAILS.

LEGEND

- CONSTRUCTION GRIDLINE
- EXISTING R/W
- EXISTING EASEMENT
- R/W EASEMENT
- EXISTING PROPERTY LINE
- PERMANENT EASEMENT
- UTILITY EASEMENT
- TCE — TEMPORARY CONSTRUCTION EASEMENT
- LIMITS OF TRANSIT CENTER/PARK AND RIDE
- SURVEY CONTROL POINT

20 0 20 40
SCALE IN FEET

CALL BEFORE YOU DIG 1-800-424-5555

DESIGNER	DRAWN BY	CHECKED BY

NO.	REVISION COMMENTS	BY	REVIEW	DATE

JON M. YAMASHITA, STATE OF WASHINGTON, 36814, REGISTERED PROFESSIONAL LAND SURVEYOR
10/4/21

KEVIN C. KRAXBERGER, STATE OF WASHINGTON, 39870, REGISTERED PROFESSIONAL ENGINEER
9/30/21

communitytransit Swift ORANGE LINE – 100% SUBMITTAL
TERMINI SURVEY CONTROL AND EXISTING CONDITIONS PLANS
WESTERN TERMINUS-EDMONDS COLLEGE
(STATION # EB 3221 & WB 3222)

TITLE

Otak
11241 Willows Road NE, Suite 200
Redmond, WA 98052
425.822.4446
www.otak.com

32880.H
PROJECT NUMBER

C1.301
DRAWING NO.

SHEET 83 OF 622

© 2021 OTAK, INC.

PDR-009731-2021

A PORTION OF THE NW 1/4 SECTION 20 T. 27N., R. 4E

27042000200100

EDMONDS COLLEGE TOTAL REMOVAL QUANTITIES		
PAVEMENT & CEMENT CONC. ROADWAY	SIDEWALK	CONC. CURB
8,400 SY	1,600 SY	3,200 LF

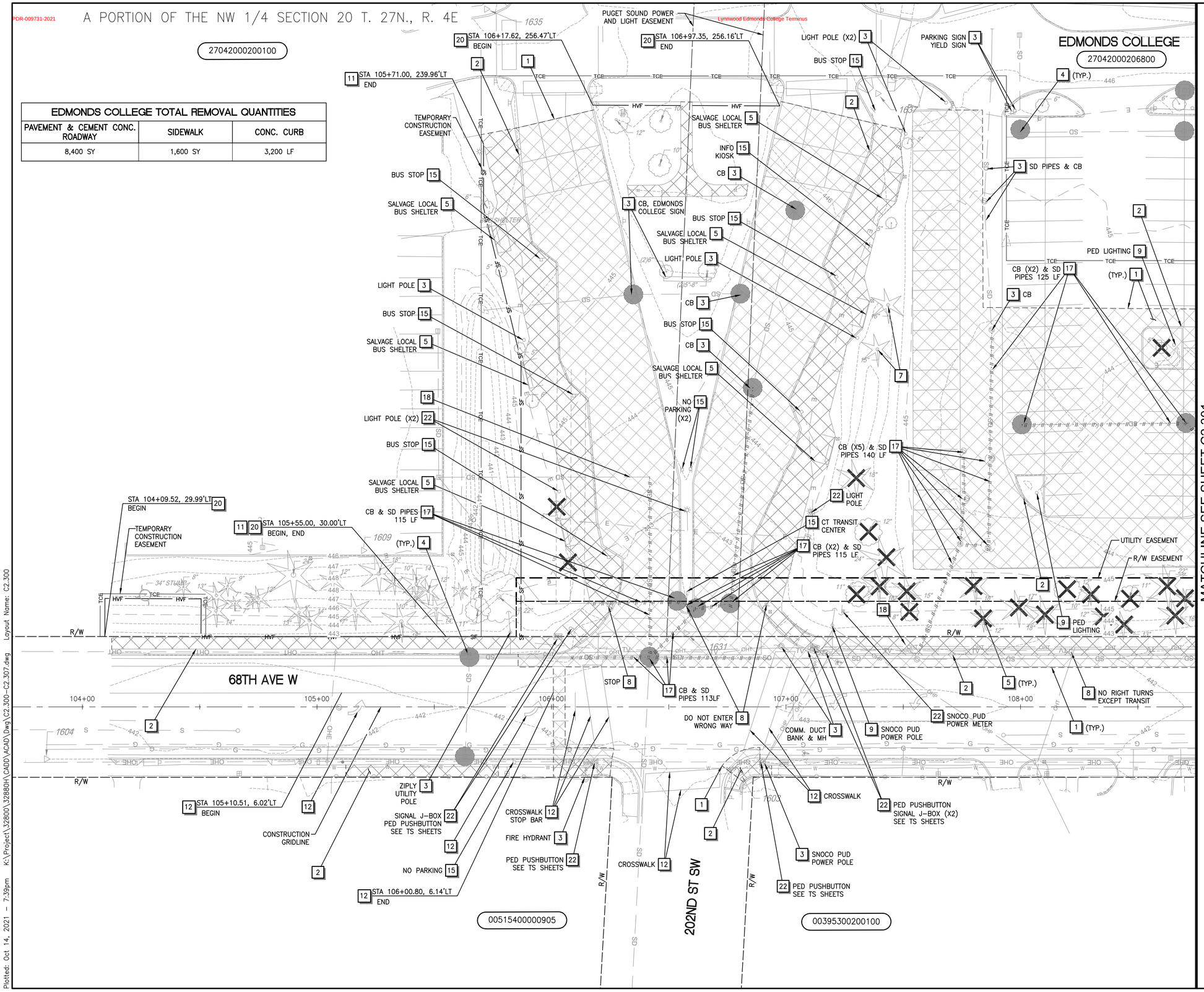

TESC/DEMOLITION NOTES

1. SAWCUT AND REMOVE ASPHALT OR CEMENT CONCRETE PAVEMENT. SEE C3 SERIES FOR PAVING LIMITS.
2. REMOVE EXISTING CURB, GUTTER AND/ OR SIDEWALK REQUIRED FOR INSTALLATION OF IMPROVEMENT. CURB, GUTTER AND/ OR SIDEWALK SHALL BE REMOVED TO THE NEAREST JOINT BEYOND THE IMPROVEMENTS OR PROVIDE SAWCUT.
3. EXISTING UTILITY/SIGN/LANDSCAPING FEATURES TO REMAIN. PROTECT DURING CONSTRUCTION.
4. INSTALL STORM DRAIN INLET PROTECTION PER WSDOT STD PLAN I-40.20-00.
5. REMOVE EXISTING LANDSCAPE FEATURES OR STRUCTURES AS INDICATED.
6. REMOVE VEGETATION WITHIN GRADING LIMITS.
7. EXISTING TREE/SHRUB TO REMAIN AND PROTECT DURING CONSTRUCTION, SEE SHEET C2.400 FOR TREE PROTECTION DETAIL.
8. SIGN RELOCATION, SEE C5 SERIES FOR DETAILS.
9. UTILITY RELOCATION, SEE C4 SERIES FOR DETAILS.
10. PLANE BITUMINOUS PAVEMENT, 2" DEPTH. SEE C3 SERIES FOR OVERLAY LIMITS.
11. INSTALL HIGH VISIBILITY SILT FENCE PER WSDOT STD PLAN I-30.17-01.
12. REMOVE EXISTING PAVEMENT MARKINGS. SEE C5 SERIES FOR PROPOSED PAVEMENT MARKINGS.
13. REMOVE PORTION OF EXISTING WALL.
14. INSTALL BIODEGRADABLE CHECK DAM PER WSDOT STD PLAN I-50.20-01.
15. REMOVE EXISTING SIGN. SEE C5 SERIES FOR DETAILS.
16. REMOVE AND REPLACE EXISTING FENCE OR RAILING. SEE C5 SERIES FOR FENCE OR RAILING INSTALLATION.
17. REMOVE EXISTING STORM, SANITARY SEWER, OR WATER PIPE OR STRUCTURE, LIMITS PER PLAN.
18. PLUG & ABANDON EXISTING PIPE.
19. NOT USED.
20. INSTALL HIGH VISIBILITY FENCE PER WSDOT STD PLAN I-10.10-01.
21. EXISTING STRUCTURE OR LANDSCAPE FEATURE RELOCATION, SEE C5 SERIES PLAN
22. REMOVE EXISTING UTILITY.

GENERAL NOTES

1. CLEARING AND GRUBBING LIMITS DEFINED BY HVF/SF LIMITS

LEGEND

- EXISTING R/W
- R/W EASEMENT
- PROPERTY LINE
- PERMANENT EASEMENT
- UTILITY EASEMENT
- TCE — TEMPORARY CONSTRUCTION EASEMENT
- SF — HIGH VISIBILITY SILT FENCE
- HVF — HIGH VISIBILITY FENCE
- SAWCUT LINE
- EXIST. PIPE REMOVAL
- STORM DRAIN INLET PROTECTION
- ASPHALT/ CONCRETE REMOVAL
- PLANE BITUMINOUS PAVEMENT
- WATTLE
- TREE REMOVAL

20 0 20 40
SCALE IN FEET

CALL BEFORE YOU DIG 1-800-424-5555

NO.	REVISION COMMENTS	BY	REVIEW	DATE

DESIGNER | DRAWN BY | CHECKED BY

LLI Submittal, Aug 3/22/2022

KEVIN C. KRAXBERGER — STATE OF WASHINGTON — 39870 — REGISTERED PROFESSIONAL ENGINEER

10/14/21

TITLE

communitytransit
Swift ORANGE LINE – 100% SUBMITTAL
TERMINI TESC AND DEMOLITION PLANS
WESTERN TERMINUS-EDMONDS
COLLEGE (STATION # EB 3221 & WB 3222)

Otak
11241 Willows Road NE, Suite 200
Redmond, WA 98052
425.822.4446
www.otak.com

32880.H
PROJECT NUMBER

C2.300
DRAWING NO.

SHEET 126 OF 622

© 2021 OTAK, INC.

Plotted: Oct 14, 2021 – 7:39pm K:\Project\32800\32880H\CADD\ACAD\Dwg\C2.300-C2.307.dwg Layout Name: C2.300

PDR-009731-2021

A PORTION OF THE NW 1/4 SECTION 20 T. 27N., R. 4E

Lynnwood Campus | College Terminus

MATCHLINE SEE SHEET C2.300

EDMONDS COLLEGE

27042000206800

01101000000100

00395300201000

00395300100100

00395300100400

68TH AVE W

201ST PL SW

200TH ST SW

CB (X2) SSMH 3

PUGET SOUND POWER AND LIGHT EASEMENT

3 LIGHT POLE

8 ADA PARKING STALL (X3)

9 LIGHT POLE

3 CB

3 LIGHT POLE

4 (TYP.)

TEMPORARY CONSTRUCTION EASEMENT

3 LIGHT POLE

STA 112+67.33, 190.60'LT BEGIN 11

3 LIGHT POLE

2

17 8" WATERMAIN 128 LF

1 (TYP.)

2

17 CB (X2) & SD PIPE 117 LF

9 LIGHT POLE

17 CB & SD PIPE 54 LF

3 CB

2

9 LIGHT POLE (X2)

3 CB (X3) MODULAR WETLAND

(TYP.) 1

9 LIGHT POLE

8 PARKING

3 SSMH

LIGHT POLE 9

21 EMERGENCY CALL BOX

3 CB (X2)

2

4' AWWD EASEMENT

9 FIRE HYDRANT

7

STA 112+67.33, 77.54'LT END 11

3 CB

3 UTILITY VAULT

3 CB (X2)

COMCAST COMM. PEDESTAL & CONDUIT 9

UTILITY EASEMENT

R/W EASEMENT

17 CB (X2) & SD PIPES 151 LF

SD PIPES 77 LF 17

17 CB & SD PIPES 63 LF

17 CB & SD PIPE 75 LF

HVF

ZIPLY UTILITY POLE 9

9 PSE GAS

5 (TYP.)

R/W

R/W

STA 112+66.32, 72.40'LT END 20

STA 112+44.97, 38.46'LT BEGIN 20

17 STORMFILTER MH SD PIPE 33 LF

9 SNOCO PUD POWER POLE

2

9 17 8" WATERMAIN 105 LF

SPEED LIMIT 30 8

17 CB & SD PIPES 40 LF

ZIPLY UTILITY POLE 9

CB (X2) SD PIPE 49 LF 17

WATER METER 9

1 (TYP.)

NO PARKING 15

12

STA 112+59.08, 16.92'LT END 12

CROSSWALK AHEAD 15

NO PARKING 15

COMCAST COMM. J-BOX 9

COMM. DUCT BANK 3

CB (X2) 3

CONTRACTOR SHALL CONFIRM SNOCO PUD POWER VAULT IS ABANDONED AND NO LONGER IN SERVICE & REMOVE VAULT 5

ZIPLY COMM. J-BOX 9

3 COMCAST COMM SEWER LINE

CONSTRUCTION GRIDLINE

3 CB (X2)

12 STA 112+25.97, 17.18'LT BEGIN

ZIPLY UTILITY POLE 3

TESC/DEMOLITION NOTES

1. SAWCUT AND REMOVE ASPHALT OR CEMENT CONCRETE PAVEMENT. SEE C3 SERIES FOR PAVING LIMITS.
2. REMOVE EXISTING CURB, GUTTER AND/ OR SIDEWALK REQUIRED FOR INSTALLATION OF IMPROVEMENT. CURB, GUTTER AND/ OR SIDEWALK SHALL BE REMOVED TO THE NEAREST JOINT BEYOND THE IMPROVEMENTS OR PROVIDE SAWCUT.
3. EXISTING UTILITY/SIGN/LANDSCAPING FEATURES TO REMAIN. PROTECT DURING CONSTRUCTION.
4. INSTALL STORM DRAIN INLET PROTECTION PER WSDOT STD PLAN I-40.20-00.
5. REMOVE EXISTING LANDSCAPE FEATURES OR STRUCTURES AS INDICATED.
6. REMOVE VEGETATION WITHIN GRADING LIMITS.
7. EXISTING TREE/SHRUB TO REMAIN AND PROTECT DURING CONSTRUCTION. SEE SHEET C2.400 FOR TREE PROTECTION DETAIL.
8. SIGN RELOCATION, SEE C5 SERIES FOR DETAILS.
9. UTILITY RELOCATION, SEE C4 SERIES FOR DETAILS.
10. PLANE BITUMINOUS PAVEMENT, 2" DEPTH. SEE C3 SERIES FOR OVERLAY LIMITS.
11. INSTALL HIGH VISIBILITY SILT FENCE PER WSDOT STD PLAN I-30.17-01.
12. REMOVE EXISTING PAVEMENT MARKINGS. SEE C5 SERIES FOR PROPOSED PAVEMENT MARKINGS.
13. REMOVE PORTION OF EXISTING WALL.
14. INSTALL BIODEGRADABLE CHECK DAM PER WSDOT STD PLAN I-50.20-01.
15. REMOVE EXISTING SIGN. SEE C5 SERIES FOR DETAILS.
16. REMOVE AND REPLACE EXISTING FENCE OR RAILING. SEE C5 SERIES FOR FENCE OR RAILING INSTALLATION.
17. REMOVE EXISTING STORM, SANITARY SEWER, OR WATER PIPE OR STRUCTURE, LIMITS PER PLAN.
18. PLUG & ABANDON EXISTING PIPE.
19. NOT USED.
20. INSTALL HIGH VISIBILITY FENCE PER WSDOT STD PLAN I-10.10-01.
21. EXISTING STRUCTURE OR LANDSCAPE FEATURE RELOCATION, SEE C5 SERIES PLAN
22. REMOVE EXISTING UTILITY.

GENERAL NOTES

1. CLEARING AND GRUBBING LIMITS DEFINED BY HVF/SF LIMITS

LEGEND

- EXISTING R/W
- R/W EASEMENT
- PROPERTY LINE
- PERMANENT EASEMENT
- UTILITY EASEMENT
- TCE — TEMPORARY CONSTRUCTION EASEMENT
- SF — HIGH VISIBILITY SILT FENCE
- HVF — HIGH VISIBILITY FENCE
- SAWCUT LINE
- EXIST. PIPE REMOVAL
- STORM DRAIN INLET PROTECTION
- ASPHALT/ CONCRETE REMOVAL
- PLANE BITUMINOUS PAVEMENT
- WATTLE
- TREE REMOVAL

20 0 20 40

SCALE IN FEET

CALL BEFORE YOU DIG 1-800-424-5555

NO.	REVISION COMMENTS	BY	REVIEW	DATE
			CHECKED BY	
			DRAWN BY	
			DESIGNER	

1st Submittal, Rev 3/22/2022

KEVIN C. KRAKEBERGER — STATE OF WASHINGTON — 39870 — REGISTERED PROFESSIONAL ENGINEER

10/14/21

TITLE

communitytransit Swift ORANGE LINE – 100% SUBMITTAL

TERMINI TESC AND DEMOLITION PLANS

WESTERN TERMINUS - EDMONDS COLLEGE

(STATION # EB3221 & WB 3222)

Otak

11241 Willows Road NE, Suite 200
Redmond, WA 98052
425.822.4446
www.otak.com

32880 H
PROJECT NUMBER

C2.301
DRAWING NO.

SHEET 127 OF 622

© 2021 OTAK, INC.

Plotted: Oct 14, 2021 - 7:39pm K:\Project\32800\32880H\CADD\ACAD\Dwg\C2.300-C2.307.dwg Layout Name: C2.301

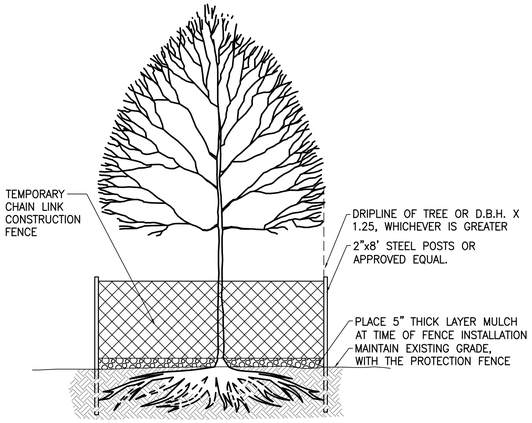

NOTES

1. INSTALL TREE PROTECTION FENCING PRIOR TO COMMENCEMENT OF ANY DEVELOPMENT ACTIVITIES.
2. 6' HIGH TEMPORARY CHAIN LINK CONSTRUCTION FENCING SHALL BE PLACED AROUND DRIPLINE OF RETAINED TREE OR AT A DISTANCE SURROUNDING THE TREE EQUAL TO ONE AND ONE-QUARTER FEET (1-1/4') FOR EVERY 1" OF TRUNK DIAMETER AT BREAST HEIGHT, WHICHEVER IS GREATER. FENCE SHALL COMPLETELY ENCIRCLE TREE(S); AVOID DRIVING POSTS OR STAKES INTO MAJOR ROOTS. EMBED STEEL POSTS DEEP ENOUGH TO SUPPORT FENCE. CONCRETE BLOCK FOOTINGS MAY BE USED WHERE POSTS ARE LOCATED ON PAVEMENT.
3. INDIVIDUAL TREES SHALL BE FENCED ON FOUR (4) SIDES. PLACARDS SHALL BE PLACED ON EACH SIDE OF THE FENCING INDICATING THE WORDS, "NO TRESPASSING - PROTECTED TREES,". SUPERVISION BY CONTRACTOR IS REQUIRED WHENEVER EQUIPMENT OR TRUCKS ARE MOVING NEAR TREES.
4. IMPERVIOUS SURFACES PROHIBITED WITHIN THE DRIP LINE: THE APPLICANT MAY NOT INSTALL IMPERVIOUS SURFACE MATERIAL WITHIN THE AREA DEFINED BY THE DRIP LINE OF ANY TREE TO BE RETAINED.
5. RESTRICTIONS ON GRADING WITHIN THE DRIP LINES OF RETAINED TREES: THE GRADE LEVEL AROUND ANY TREE TO BE RETAINED MAY NOT BE LOWERED WITHIN THE GREATER OF THE FOLLOWING AREAS: (I) THE AREA DEFINED BY THE DRIP LINE OF THE TREE, OR (II) AN AREA AROUND THE TREE EQUAL TO ONE AND ONE-HALF FEET (1-1/2') IN DIAMETER FOR EACH ONE INCH (1") OF TREE CALIPER.
6. ALL AREAS WITHIN THE REQUIRED FENCING SHALL BE COVERED COMPLETELY AND EVENLY WITH A MINIMUM OF FIVE INCHES (5") OF BARK MULCH PRIOR TO INSTALLATION OF THE PROTECTIVE FENCING
7. TREATMENT OF ROOTS EXPOSED DURING CONSTRUCTION: FOR ROOTS OVER 1" IN DIA., MAKE A CLEAN STRAIGHT CUT TO REMOVE DAMAGED PORTION OF ROOT. ALL EXPOSED ROOTS SHALL BE COVERED WITH TOPSOIL IMMEDIATELY TO PREVENT DRYING.
8. DO NOT FILL, EXCAVATE, STACK OR STORE ANY EQUIPMENT, DISPOSE OF ANY MATERIALS, SUPPLIES OR FLUIDS, OPERATE ANY EQUIPMENT, INSTALL IMPERVIOUS SURFACES, OR COMPACT THE EARTH IN ANY WAY WITHIN THE AREA DEFINED BY THE DRIP LINE OF ANY TREE TO BE RETAINED
9. NO PRUNING SHALL BE PERFORMED EXCEPT BY APPROVED ARBORIST.

TREE PROTECTION

NOT TO SCALE

CALL BEFORE YOU DIG 1-800-424-5555

DESIGNER	DRAWN BY	CHECKED BY

NO.	REVISION COMMENTS	BY	REVIEW	DATE

STATE OF WASHINGTON
THOMAS LUKE EARLY
NO. 1199 EXP. 07/08/2020
LICENSED LANDSCAPE ARCHITECT
9/24/21

communitytransit
Swift ORANGE LINE - 100% SUBMITTAL
TESC AND DEMOLITION DETAILS

TITLE

Otak

11241 Willows Road NE, Suite 200
Redmond, WA 98052
425.822.4446
www.otak.com

32880.H
PROJECT NUMBER

C2.400

DRAWING NO.

SHEET 134 OF 622

© 2021 OTAK, INC.

Plotted: Sep 24, 2021 - 10:09am K:\Project\32800\32880H\CADD\ACAD\Dwg\C2.400.dwg Layout Name: C2.400

PDR-009731-2021

A PORTION OF THE NW 1/4 SECTION 20 T. 27N., R. 4E

EDMONDS COLLEGE

27042000200100

27042000206800

Lynnwood Edmonds College Terminus

68TH AVE W

202ND ST SW

00515400000905

MATCHLINE SEE SHEET C3.301

STA 104+12.50, 24.67'LT (11) BEGIN, MATCH EXIST.

STA 105+86.04, 246.95'LT (23) BEGIN, MATCH EXIST.

STA 105+85.78, 22.05'LT (2) BEGIN, MATCH EXIST. (5) BEGIN, MATCH EXIST.

STA 106+17.44, 254.32'LT (23) END, MATCH EXIST.

STA 106+98.46, 257.90'LT (23) BEGIN, MATCH EXIST.

STA 106+22.56 23.06 LT (12) BEGIN

STA 106+04.53, 22.07'LT (11) END

STA 106+46.06 59.66 LT (8) BEGIN

STA 106+22.56, 22.00'LT (22) BEGIN, FL ELEV.=441.98'

STA 106+85.31, 21.85'LT (22) END, FL ELEV.=442.46'

STA 106+94.45, 29.83'LT (8) BEGIN

STA 107+54.14, 117.90'LT (5) BEGIN (6) END

STA 107+37.49, 248.77'LT (23) END, MATCH EXIST.

STA 107+69.52, 254.37'LT (6) BEGIN, MATCH EXIST.

STA 107+80.79, 42.33'LT (14) BEGIN, SEAT WALL TYPE 1

STA 107+03.34, 21.83'LT (21) BEGIN

STA 108+04.38, 50.49'LT (14) END, SEAT WALL TYPE 1

STA 108+64.38, 48.33'LT (14) BEGIN, SEAT WALL TYPE 1

STA 108+05.05, 47.33'LT (7) BEGIN, TOC=443.64

STA 108+64.38, 47.33'LT (7) END, TOC=443.14

STA 108+64.38, 52.33'LT (7) AP, TOC=443.14

STA 108+34.38, 52.33'LT (7) STEP TOC=443.64, TOC=443.14

STA 108+04.38, 52.33'LT (7) AP, TOC=443.64

STA 105+72.34, 22.50'RT (11) AP

STA 105+77.34, 24.50'RT (11) END, MATCH EXIST.

STA 105+12.32, 22.50'RT (11) BEGIN, MATCH EXIST.

STA 106+00.84, 21.93'RT (2) (5) (11) BEGIN, MATCH EXIST.

STA 106+25.73, 22.23'RT (2) (5) (11) END, MATCH EXIST.

STA 106+93.85, 25.03'RT (11) END, MATCH EXIST.

STA 106+88.90, 21.78'RT (2) (5) END, MATCH EXIST.

STA 106+76.33, 27.81'RT (2) (5) (11) BEGIN, MATCH EXIST.

PUGET SOUND POWER AND LIGHT EASEMENT

UTILITY EASEMENT

R/W EASEMENT

TEMPORARY CONSTRUCTION EASEMENT

GRADING LIMITS, TYP.

TEMPORARY CONSTRUCTION EASEMENT

BUS SHELTER

14 WALL E2

14 SEAT WALL TYPE 2 (TYP.)

E76, END 6" TALL CURB

E78, BEGIN 10" TALL CURB

25 (TYP. OF 6 QTY. THIS SHEET)

6 (TYP.) 17 (TYP.) 13

R=49.3' R=30.0' R=15.0' R=19.5' R=25.0' R=50.0' R=2.0'

-0.5% -2.0% -1.1% 1.7%

CONSTRUCTION NOTES

1. CONSTRUCTION GRIDLINE, SEE 100-SERIES SHEETS.
2. CONSTRUCT ASPHALT PAVEMENT REPAIR PER SECTION ON SHEET C3.403 AT EDMONDS COLLEGE & PER DUMAS RD ASPHALT PAVEMENT REPAIR DETAIL ON SHEET C3.404 AT MCCOLLUM PARK P&R.
3. CONSTRUCT PARK RD ASPHALT PAVEMENT REPAIR AND OVERLAY SECTION PER DETAIL ON SHEET C3.404.
4. 2" HMA GRIND AND OVERLAY PER DETAIL ON SHEET C3.401 AT EDMONDS COLLEGE & PER PARK RD DETAIL ON SHEET C3.404 AT MCCOLLUM PARK P&R.
5. CONSTRUCT CEMENT CURB AND GUTTER PER WSDOT STD PLAN F-10.12-04.
6. CONSTRUCT CEMENT CONCRETE TRAFFIC CURB PER WSDOT STD PLAN F-10.12-04.
7. CONSTRUCT STATION PLATFORM VERTICAL CURB PER DETAIL ON SHEET C3.400.
8. CONSTRUCT TRANSIT CENTER PLATFORM. SEE SHEET C3.403 FOR DETAILS.
9. CONSTRUCT CURB RETURN AND CURB RAMP OVER 4" CSTC, SEE C3.5 SERIES PLANS FOR LAYOUT.
10. DRIVER RESTROOM, SEE SHEET C6.405 FOR DETAILS.
11. CONSTRUCT CEMENT CONCRETE SIDEWALK PER WSDOT STD PLAN F-30.10-04 OVER 4" CSTC.
12. CONSTRUCT 15 IN. TRANSIT CENTER CEMENT CONCRETE ROADWAY PER DETAIL ON SHEET C3.403.
13. CONSTRUCT TRAFFIC ISLAND, SEE C3.5 SERIES PLANS FOR LAYOUT.
14. CONSTRUCT RETAINING WALL, W-SERIES SHEETS FOR WALL TYPE, ELEVATION, AND DETAILS.
15. CONSTRUCT CEMENT CONCRETE STAIRS PER DETAIL ON SHEET W2.5.
16. CONSTRUCT CEMENT CONCRETE DRIVEWAY ENTRANCE TYPE 1 PER WSDOT STD PLAN F-80.10-04.
17. CONSTRUCT PARKING LOT/ DRIVEWAY ASPHALT REPAIR PER DETAIL ON SHEET C3.401 AT EDMONDS COLLEGE & PER DETAIL ON SHEET C3.404 AT MCCOLLUM PARK P&R.
18. CONSTRUCT GRAVEL ACCESS ROAD SECTION PER DETAIL ON SHEET C3.404.
19. CONSTRUCT TRANSIT CENTER STRUCTURAL SIDEWALK PER DETAIL ON SHEET W4.2.
20. CONSTRUCT SPEED HUMP PER SNOHOMISH COUNTY PUBLIC WORKS STD DETAIL 7-170.
21. CONSTRUCT EDMONDS COLLEGE 11 IN. CEMENT CONCRETE ROADWAY PER DETAILS ON SHEET C3.403.
22. CONSTRUCT VALLEY GUTTER PER DETAIL ON SHEET C3.404.
23. CONSTRUCT ASPHALT BERM PER DETAIL ON SHEET C3.404.
24. CONSTRUCT ADA PARKING STALLS, SEE C3.6 SERIES PLANS FOR LAYOUT.
25. GREENSCREEN VINE TRELLIS, SEE SHEET C6.400.
26. CONSTRUCT ASPHALT PATH PER SECTION ON SHEET C3.404.

GENERAL NOTES

1. ALL SPOT ELEVATIONS ARE TO FINISHED GRADE UNLESS NOTED OTHERWISE.
2. ALL DIMENSIONS AND STATION AND OFFSET REFERENCES ARE TO FACE OF CURB UNLESS NOTED OTHERWISE.
3. THE FINISHED GRADE CONTOURS SHOWN CORRESPOND TO FINISHED PAVEMENT AND TRANSITION GRADES.

LEGEND

- EXISTING R/W
- R/W EASEMENT
- PROPERTY LINE
- PERMANENT EASEMENT
- UTILITY EASEMENT
- TCE — TEMPORARY CONSTRUCTION EASEMENT
- RETAINING WALL
- GRADING LIMITS
- GRADE BREAK
- CEMENT CONCRETE SIDEWALK
- TRANSIT CENTER PLATFORM
- HMA/ASPHALT PAVEMENT
- HMA/GRIND AND ASPHALT OVERLAY
- SAWCUT
- GRAVEL ACCESS ROAD/WALKWAY
- 15" THICK TRANSIT CENTER CEMENT CONCRETE ROADWAY
- TRANSIT CENTER STRUCTURAL SIDEWALK
- × CONTROL POINTS, SEE SHEETS C3.308-C3.309A

20 0 20 40

SCALE IN FEET

CALL BEFORE YOU DIG 1-800-424-5555

NO.	REVISION COMMENTS	BY	REVIEW	DATE

DESIGNER | DRAWN BY | CHECKED BY

KEVIN C. KRAXBERGER, STATE OF WASHINGTON, 39870, REGISTERED PROFESSIONAL ENGINEER

10/14/21

LLI Submittal, 3/22/2022

community transit

Swift ORANGE LINE - 100% SUBMITTAL

TERMINI SITE GRADING AND PAVING PLANS

WESTERN TERMINUS-EDMONDS COLLEGE

(STATION # EB 3221 & WB 3222)

TITLE

Otak

11241 Willows Road NE, Suite 200
Redmond, WA 98052
425.822.4446
www.otak.com

32880.H
PROJECT NUMBER

C3.300
DRAWING NO.

SHEET 171 OF 622

© 2021 OTAK, INC.

Plotted: Oct 14, 2021 - 7:36pm K:\Project\32800\32880H\CADD\ACAD\Dwg\C3.300-C3.309A.dwg Layout Name: C3.300

PDR-009231-2021

A PORTION OF THE NW 1/4 SECTION 20 T. 27N., R. 4E

Lynnwood Extension, College Terminus

EDMONDS COLLEGE

27042000206800

MATCHLINE SEE SHEET C3.300

STA 109+19.80, 272.91'LT (6) END, MATCH EXIST.

STA 109+38.09, 281.62'LT (11) BEGIN, MATCH EXIST.

PUGET SOUND POWER AND LIGHT EASEMENT

GRADING LIMITS, TYP.

STA 109+54.39, 193.83'LT (6) BEGIN

STA 109+67.05, 180.64'LT (6) BEGIN, MATCH EXIST.

STA 109+39.38, 193.83'LT (6) BEGIN

STA 109+39.38, 131.12'LT (6) END

STA 109+54.39, 135.68'LT (6) END

STA 109+54.38, 126.09'LT (11) END

STA 109+66.88, 142.96'LT (5) BEGIN (6) END

STA 109+29.44, 136.83'LT (5) END (6) BEGIN

STA 109+04.38, 58.33'LT (14) BEGIN, SEAT WALL TYPE 1

STA 108+84.38, 58.34'LT (14) END, SEAT WALL TYPE 1

STA 109+74.51, 42.33'LT (14) END, SEAT WALL TYPE 1

STA 111+18.22, 21.83'LT (21) END

STA 111+38.01, 21.83'LT (22) BEGIN, FL ELEV.=438.90'

STA 112+02.88, 21.80'LT (22) END, FL ELEV.=439.13'

STA 112+25.97, 21.80'LT (2) END, MATCH EXIST. (5) END, MATCH EXIST. (11) END, MATCH EXIST.

STA 112+53.41, 85.60'LT (11) BEGIN

STA 112+61.56, 104.02'LT (5) END, MATCH EXIST.

STA 112+64.51, 73.43'LT (11) END, MATCH EXIST.

STA 111+83.65, 38.02'LT (8) END (11) BEGIN

STA 112+02.88, 22.80'LT (12) END

TEMPORARY CONSTRUCTION EASEMENT

4' AWWD EASEMENT

UTILITY EASEMENT

R/W EASEMENT

E73, BEGIN 6" TALL CURB

E70, END 10" TALL CURB

(25) (TYP, OF 5 QTY, THIS SHEET)

(14) WALL E1

(14) SEAT WALL TYPE 2 (TYP.)

(13) (TYP.)

(6) (TYP.)

68TH AVE W

201ST PL SW

200TH ST SW

109+00 110+00 111+00 112+00 113+00

R/W

TCE

CONSTRUCTION NOTES

1. CONSTRUCTION GRIDLINE, SEE 100-SERIES SHEETS.
2. CONSTRUCT ASPHALT PAVEMENT REPAIR PER SECTION ON SHEET C3.403 AT EDMONDS COLLEGE & PER DUMAS RD ASPHALT PAVEMENT REPAIR DETAIL ON SHEET C3.404 AT MCCOLLUM PARK P&R.
3. CONSTRUCT PARK RD ASPHALT PAVEMENT REPAIR AND OVERLAY SECTION PER DETAIL ON SHEET C3.404.
4. 2" HMA GRIND AND OVERLAY PER DETAIL ON SHEET C3.401 AT EDMONDS COLLEGE & PER PARK RD DETAIL ON SHEET C3.404 AT MCCOLLUM PARK P&R.
5. CONSTRUCT CEMENT CURB AND GUTTER PER WSDOT STD PLAN F-10.12-04.
6. CONSTRUCT CEMENT CONCRETE TRAFFIC CURB PER WSDOT STD PLAN F-10.12-04.
7. CONSTRUCT STATION PLATFORM VERTICAL CURB PER DETAIL ON SHEET C3.400.
8. CONSTRUCT TRANSIT CENTER PLATFORM. SEE SHEET C3.403 FOR DETAILS.
9. CONSTRUCT CURB RETURN AND CURB RAMP OVER 4" CSTC, SEE C3.5 SERIES PLANS FOR LAYOUT.
10. DRIVER RESTROOM, SEE SHEET C6.405 FOR DETAILS.
11. CONSTRUCT CEMENT CONCRETE SIDEWALK PER WSDOT STD PLAN F-30.10-04 OVER 4" CSTC.
12. CONSTRUCT 15 IN. TRANSIT CENTER CEMENT CONCRETE ROADWAY PER DETAIL ON SHEET C3.403.
13. CONSTRUCT TRAFFIC ISLAND, SEE C3.5 SERIES PLANS FOR LAYOUT.
14. CONSTRUCT RETAINING WALL, W-SERIES SHEETS FOR WALL TYPE, ELEVATION, AND DETAILS.
15. CONSTRUCT CEMENT CONCRETE STAIRS PER DETAIL ON SHEET W2.5.
16. CONSTRUCT CEMENT CONCRETE DRIVEWAY ENTRANCE TYPE 1 PER WSDOT STD PLAN F-80.10-04.
17. CONSTRUCT PARKING LOT/ DRIVEWAY ASPHALT REPAIR PER DETAIL ON SHEET C3.401 AT EDMONDS COLLEGE & PER DETAIL ON SHEET C3.404 AT MCCOLLUM PARK P&R.
18. CONSTRUCT GRAVEL ACCESS ROAD SECTION PER DETAIL ON SHEET C3.404.
19. CONSTRUCT TRANSIT CENTER STRUCTURAL SIDEWALK PER DETAIL ON SHEET W4.2.
20. CONSTRUCT SPEED HUMP PER SNOHOMISH COUNTY PUBLIC WORKS STD DETAIL 7-170.
21. CONSTRUCT EDMONDS COLLEGE 11 IN. CEMENT CONCRETE ROADWAY PER DETAILS ON SHEET C3.403.
22. CONSTRUCT VALLEY GUTTER PER DETAIL ON SHEET C3.404.
23. CONSTRUCT ASPHALT BERM PER DETAIL ON SHEET C3.404.
24. CONSTRUCT ADA PARKING STALLS, SEE C3.6 SERIES PLANS FOR LAYOUT.
25. GREENSCREEN VINE TRELLIS, SEE SHEET C6.400.
26. CONSTRUCT ASPHALT PATH PER SECTION ON SHEET C3.404.

GENERAL NOTES

1. ALL SPOT ELEVATIONS ARE TO FINISHED GRADE UNLESS NOTED OTHERWISE.
2. ALL DIMENSIONS AND STATION AND OFFSET REFERENCES ARE TO FACE OF CURB UNLESS NOTED OTHERWISE.
3. THE FINISHED GRADE CONTOURS SHOWN CORRESPOND TO FINISHED PAVEMENT AND TRANSITION GRADES.

LEGEND

- EXISTING R/W
- R/W EASEMENT
- PROPERTY LINE
- PERMANENT EASEMENT
- UTILITY EASEMENT
- TCE — TEMPORARY CONSTRUCTION EASEMENT
- RETAINING WALL
- GRADING LIMITS
- GRADE BREAK
- CEMENT CONCRETE SIDEWALK
- TRANSIT CENTER PLATFORM
- HMA/ASPHALT PAVEMENT
- HMA/GRIND AND ASPHALT OVERLAY
- SAWCUT
- GRAVEL ACCESS ROAD/WALKWAY
- 15" THICK TRANSIT CENTER CEMENT CONCRETE ROADWAY
- TRANSIT CENTER STRUCTURAL SIDEWALK
- CONTROL POINTS, SEE SHEETS C3.308-C3.309A

20 0 20 40

SCALE IN FEET

CALL BEFORE YOU DIG 1-800-424-5555

NO.	REVISION COMMENTS	BY	REVIEW	DATE

DESIGNER

DRAWN BY

CHECKED BY

1st Submittal, Rev 3/22/2022

KEVIN C. KRAXBERGER — STATE OF WASHINGTON — 39870 — REGISTERED PROFESSIONAL ENGINEER

11/2/21

TITLE

communitytransit

Swift ORANGE LINE - 100% SUBMITTAL

TERMINI SITE GRADING AND PAVING PLANS

WESTERN TERMINUS - EDMONDS COLLEGE

(STATION # EB 3221 & WB 3222)

Otak

11241 Willows Road NE, Suite 200
Redmond, WA 98052
425.822.4446
www.otak.com

32880.H
PROJECT NUMBER

C3.301
DRAWING NO.

SHEET 172 OF 622

© 2021 OTAK, INC.

Plotted: Nov 03, 2021 - 8:54am K:\Project\32800\32880H\CADD\ACAD\Dwg\C3.300-C3.309A.dwg Layout Name: C3.301

WESTERN TERMINUS POINT TABLES			
POINT	STATION/OFFSET	ELEVATION	DESCRIPTION
E01	104+12.50, 24.32L	442.31	BEGIN, MATCH EXIST.
E02	104+17.50, 22.58L	442.30	AP
E03	104+42.50, 22.61L	442.37	AP
E04	104+77.50, 22.66L	442.38	AP
E05	105+85.78, 22.04L	441.63	AP
E06	106+15.01, 22.08L	441.87	PC
E07	106+41.82, 38.69L	442.29	GB
E08	106+44.79, 48.72L	442.65	PT
E09	106+45.86, 58.20L	442.90	PC
E10	106+75.67, 84.83L	444.07	PT, HP
E11	110+04.69, 84.83L	442.42	PC
E12	110+14.17, 88.21L	442.39	PT
E13	110+21.64, 94.30L	442.37	PC
E14	110+24.38, 96.08L	442.36	GB
E15	110+34.11, 97.38L	442.21	PT
E16	110+90.18, 86.00L	441.35	PC
E17	111+00.83, 86.48L	441.21	PRC
E18	111+14.41, 88.71L	441.05	GB
E19	111+66.82, 62.64L	440.04	PT
E20	111+75.20, 50.39L	439.79	GB

WESTERN TERMINUS POINT TABLES			
POINT	STATION/OFFSET	ELEVATION	DESCRIPTION
E21	111+85.81, 34.86L	439.54	PC
E22	112+10.60, 21.79L	439.16	PT
E23	112+25.97, 21.80L	439.22	END, MATCH EXIST.
E24	112+25.96, 29.53L	440.08	END, MATCH EXIST.
E25	112+10.59, 29.54L	439.70	AP
E26	111+92.59, 44.43L	440.15	AP
E27	111+73.30, 72.66L	440.66	PT
E28	111+34.45, 98.44L	441.32	PC
E29	111+16.98, 101.98L	441.57	GB
E30	110+28.78, 119.89L	442.96	GB
E31	109+99.38, 125.83L	443.15	AP
E32	109+54.38, 126.09L	443.38	AP
E33	109+54.38, 153.83L	444.37	GB
E34	109+54.38, 163.83L	444.47	GB
E35	109+54.38, 193.83L	445.64	AP
E36	109+51.88, 193.83L	445.66	AP
E37	109+51.88, 245.14L	446.43	GB
E38	109+51.88, 247.06L	446.43	AP
E39	109+51.17, 248.85L	446.43	GB
E40	109+38.09, 281.62L	446.93	AP, MATCH EXIST.

WESTERN TERMINUS POINT TABLES			
POINT	STATION/OFFSET	ELEVATION	DESCRIPTION
E41	109+28.80, 277.92L	447.06	AP, MATCH EXIST.
E42	109+41.88, 245.14L	446.53	AP
E43	109+41.88, 193.83L	445.76	AP
E44	109+39.38, 193.83L	445.79	AP
E45	109+39.38, 163.83L	444.62	GB
E46	109+39.38, 153.83L	444.52	GB
E47	109+39.38, 126.09L	443.45	GB
E48	109+39.38, 120.33L	443.42	AP
E49	109+18.38, 120.33L	443.53	AP
E50	109+02.60, 104.83L	443.53	AP
E51	106+84.84, 105.17L	444.62	PT
E52	106+75.67, 104.31L	444.67	GB
E53	106+35.81, 61.34L	443.49	PC
E54	106+34.36, 49.95L	443.20	PT
E56	106+04.52, 29.57L	442.39	AP
E57	106+90.74, 21.83L	442.39	PT, LP
E58	107+03.34, 21.83L	442.44	PC
E59	107+15.47, 23.32L	442.49	PT
E60	107+54.51, 33.08L	442.66	PC
E61	107+60.58, 33.83L	442.68	PT, HP

WESTERN TERMINUS POINT TABLES			
POINT	STATION/OFFSET	ELEVATION	DESCRIPTION
E62	108+04.38, 33.83L	442.22	GB
E63	109+39.38, 33.83L	440.00	GB
E64	110+33.81, 33.83L	439.42	PC
E65	110+42.03, 33.15L	439.37	PT
E66	111+01.78, 23.19L	439.07	PC
E67	111+18.22, 21.83L	438.99	PT
E68	111+33.22, 21.83L	438.91	PC
E69	111+36.62, 22.32L	438.91	GB, LP
E70	111+45.13, 32.33L	439.10	PT
E71	111+43.13, 40.60L	439.22	PT
E72	111+39.60, 45.76L	439.44	PC
E73	111+14.83, 58.83L	440.45	PT
E74	110+24.38, 58.83L	441.80	GB
E75	106+91.53, 58.83L	443.47	PC
E76	106+86.16, 57.84L	443.49	GB, HP
E77	106+76.63, 45.51L	442.94	PT
E78	106+75.77, 38.51L	442.70	PC
E79	107+38.45, 37.83L	443.47	AP
E80	107+80.79, 42.33L	443.34	AP
E81	107+88.95, 50.49L	443.30	AP

WESTERN TERMINUS POINT TABLES			
POINT	STATION/OFFSET	ELEVATION	DESCRIPTION
E82	108+04.38, 50.49L	443.13	AP
E83	108+04.38, 52.33L	443.14	AP
E84	108+64.38, 52.33L	442.11	AP
E85	108+64.38, 48.33L	442.09	AP
E85A	108+74.38, 48.33L	441.91	AP
E86	108+84.38, 58.34L	442.95	AP
E87	109+04.38, 58.34L	442.85	AP
E88	109+14.38, 48.33L	441.22	AP
E89	109+68.35, 48.50L	440.68	AP
E90	109+74.52, 42.33L	440.58	AP
E91	110+98.65, 32.33L	439.97	AP
E92	105+70.05, 243.92L	447.25	MATCH EXIST.
E93	105+86.04, 246.95L	446.73	BEGIN, MATCH EXIST.
E94	106+11.60, 252.95L	446.46	AP
E95	106+15.81, 250.34L	446.36	AP
E96	106+18.24, 250.91L	446.35	AP
E97	106+17.44, 254.32L	446.48	END, MATCH EXIST.
E98	106+36.27, 177.17L	445.25	MATCH EXIST.
E99	106+79.15, 177.48L	445.29	MATCH EXIST.
E100	106+98.46, 257.90L	446.85	BEGIN, MATCH EXIST.

WESTERN TERMINUS POINT TABLES			
POINT	STATION/OFFSET	ELEVATION	DESCRIPTION
E101	106+97.67, 254.50L	446.73	AP
E102	107+00.10, 253.93L	446.35	AP
E103	107+04.31, 256.54L	446.56	AP
E104	107+37.49, 248.77L	446.76	END, MATCH EXIST.
E105	107+49.59, 245.94L	446.62	MATCH EXIST.
E106	107+69.52, 254.37L	445.94	BEGIN, MATCH EXIST.
E107	107+53.77, 254.37L	446.24	AP
E108	107+54.17, 117.87L	443.74	AP
E109	107+71.12, 117.87L	443.40	PC
E110	107+73.12, 115.88L	443.37	PT
E111	107+73.13, 112.33L	443.34	AP, LP
E112	108+45.52, 112.33L	443.77	PC
E113	108+54.46, 113.69L	443.82	PT
E114	109+11.44, 131.48L	444.18	AP
E115	109+11.44, 133.83L	444.22	PC
E116	109+14.44, 136.83L	444.29	PT
E117	109+29.44, 136.83L	444.51	AP
E118	109+29.44, 184.83L	445.24	GB
E119	109+29.44, 262.83L	446.13	AP
E120	109+14.21, 262.83L	445.90	PC

WESTERN TERMINUS POINT TABLES			
POINT	STATION/OFFSET	ELEVATION	DESCRIPTION
E121	109+12.69, 266.13L	445.97	PCC
E122	109+19.80, 272.91L	446.41	PT, END, MATCH EXIST.
E123	109+06.44, 266.32L	446.09	AP, MATCH EXIST.
E124	109+06.44, 184.83L	444.83	GB, MATCH EXIST.
E125	109+06.44, 169.36L	444.49	AP, MATCH EXIST.
E126	107+84.02, 170.27L	444.22	AP, MATCH EXIST.
E127	107+83.77, 254.37L	445.55	AP, MATCH EXIST.
E128	109+67.05, 180.64L	444.89	BEGIN, MATCH EXIST.
E129	109+66.88, 142.96L	444.13	AP
E130	109+81.24, 142.85L	443.92	PC
E131	109+84.22, 139.84L	443.83	PT
E132	109+84.20, 136.09L	443.74	AP, LP
E133	110+91.54, 114.29L	444.83	PC
E134	110+96.41, 113.79L	444.88	PT, HP
E135	111+57.24, 113.52L	443.97	PC
E136	111+77.15, 93.43L	443.50	PT
E137	111+77.10, 81.26L	443.31	AP
E138	112+41.46, 81.28L	442.35	AP
E139	112+45.61, 86.17L	442.28	AP
E140	112+51.68, 86.11L	442.22	GB, LP

WESTERN TERMINUS POINT TABLES			
POINT	STATION/OFFSET	ELEVATION	DESCRIPTION
E141	112+53.42, 86.10L	442.24	BEGIN, AP
E142	112+53.40, 84.70L	442.25	PC
E143	112+59.74, 75.30L	442.35	PT
E144	112+64.51, 73.43L	442.39	END, MATCH EXIST.
E145	112+61.42, 86.02L	442.10	AP
E146	112+61.56, 104.02L	442.50	END, MATCH EXIST.
E147	112+51.85, 104.11L	442.51	GB, MATCH EXIST.
E148	112+42.73, 104.19L	442.54	AP, MATCH EXIST.
E149	112+42.90, 161.18L	443.91	AP, MATCH EXIST.
E150	111+63.45, 161.42L	444.38	AP, MATCH EXIST.
E151	111+63.49, 169.30L	444.53	AP, MATCH EXIST.
E152	110+50.51, 170.10L	444.76	AP, MATCH EXIST.
E153	110+50.52, 180.55L	444.73	AP, MATCH EXIST.

WESTERN TERMINUS - EDMONDS COLLEGE POINT TABLES

GENERAL NOTES

1. ALL SPOT ELEVATIONS ARE TO FINISHED GRADE UNLESS NOTED OTHERWISE.
2. ALL DIMENSIONS AND STATION AND OFFSET REFERENCES ARE TO FACE OF CURB UNLESS NOTED OTHERWISE.
3. ALL SPOT ELEVATIONS AT FACE OF CURB ARE FLOW LINE ELEVATIONS UNLESS NOTED OTHERWISE.

LEGEND

AP	ANGLE POINT
PRC	POINT OF REVERSE CURVATURE
PCC	POINT OF COMPOUND CURVATURE
PC	POINT OF CURVATURE
PT	POINT OF TANGENCY
HP	HIGH POINT
LP	LOW POINT
GB	GRADE BREAK

NO.	REVISION COMMENTS	BY	REVIEW	DATE

DESIGNER

DRAWN BY

CHECKED BY

KEVIN C. KRAXBERGER
STATE OF WASHINGTON
39870
REGISTERED
PROFESSIONAL ENGINEER

11/4/21

communitytransit

Swift ORANGE LINE - 100% SUBMITTAL

TERMINI SITE GRADING AND PAVING PLANS
WESTERN TERMINUS-EDMONDS COLLEGE
(STATION # EB 3221 & WB 3222) POINT TABLES

TITLE

Otak
11241 Willows Road NE, Suite 200
Redmond, WA 98052
425.822.4446
www.otak.com

32880.H
PROJECT NUMBER

C3.308
DRAWING NO.

SHEET 179 OF 622

© 2021 OTAK, INC.

CALL BEFORE YOU DIG 1-800-424-5555

Plotted: Nov 04, 2021 - 2:49pm K:\Project\32800\32880H\CADD\ACAD\Dwg\C3.300-C3.309A.dwg Layout Name: C3.308

PDR-409731-2021

WESTERN TERMINUS JOINTING POINT TABLE

POINT	STATION/OFFSET
J1	106+22.56, 23.06L
J2	106+43.55, 22.99L
J3	106+58.55, 22.94L
J4	106+73.55, 22.89L
J5	106+85.31, 22.85L
J6	106+35.25, 29.97L
J7	106+43.58, 29.94L
J8	106+58.58, 29.89L
J9	106+73.58, 29.84L
J10	106+77.47, 29.83L
J11	106+41.82, 38.69L
J12	106+43.61, 38.68L
J13	106+58.65, 38.60L
J14	106+73.61, 38.53L
J15	106+75.84, 38.51L
J16	106+46.06, 59.66L
J17	106+59.52, 53.43L
J18	106+76.63, 45.51L
J19	106+57.01, 78.32L
J20	106+67.46, 65.90L
J21	106+79.04, 52.13L
J22	106+75.67, 84.83L
J23	106+80.72, 71.83L
J24	106+86.16, 57.84L
J25	106+94.38, 84.82L
J26	106+94.38, 71.83L
J27	106+94.38, 58.83L
J28	107+04.38, 84.82L
J29	107+04.38, 71.83L
J30	107+04.38, 58.83L

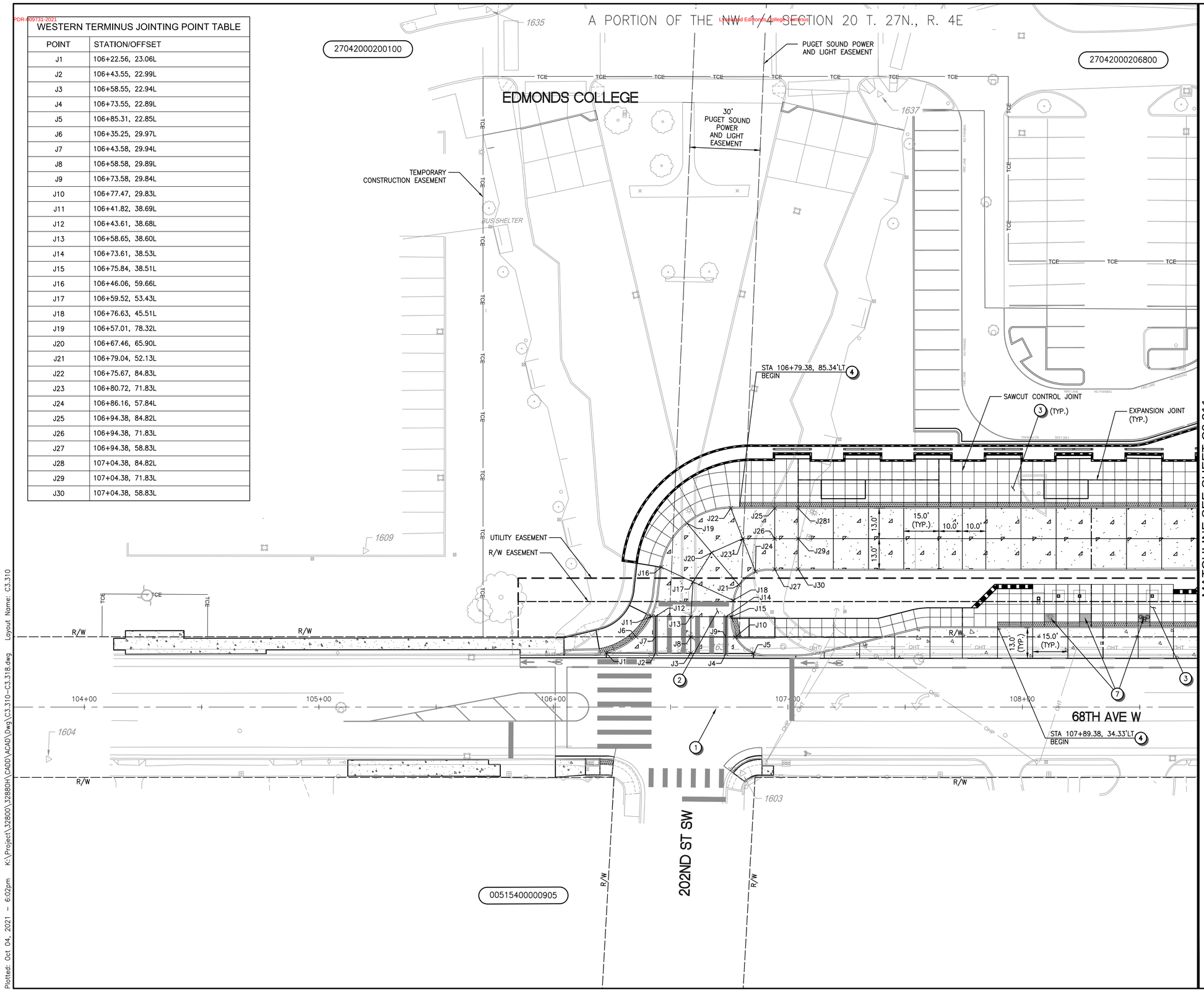

CONSTRUCTION NOTES

1. CONSTRUCTION GRID LINE, SEE 100-SERIES SHEETS.
2. CONSTRUCT 15" TRANSIT CENTER CEMENT CONCRETE ROADWAY PANELS PER DETAILS ON C3-4 SERIES PLANS.
3. EDMONDS COLLEGE & MCCOLLUM PARK P&R TRANSIT CENTER PLATFORM PAVING: 5'X5' SQUARE CONTROL JOINTS (TYP.) OR AS SHOWN ON PLANS. PROVIDE EXPANSION JOINTS WHERE SHOWN AND PROVIDE ISOLATION JOINTS WHERE PAVEMENT ABUTS LANDSCAPE PLANTER WALLS, SEAT WALLS AND BUILDING WALLS. SEE TRANSIT PLATFORM JOINTING DETAILS ON SHEET C3.402.
4. 2' WIDE DETECTABLE WARNING SURFACE PER DETAIL ON PLAN SHEET A4.100.
5. LYNNWOOD TRANSIT CENTER PLATFORM PAVING: 2.5'X2.5' SQUARE CONTROL JOINTS (TYP.) OR AS SHOWN ON PLANS. PROVIDE EXPANSION JOINTS WHERE SHOWN AND PROVIDE ISOLATION JOINTS WHERE PAVEMENT ABUTS EXISTING PAVEMENT, BUILDING WALLS, SEAT WALLS, AND LANDSCAPE PLANTER WALLS. SEE TRANSIT PLATFORM JOINTING DETAILS ON SHEET C3.402.
6. COLORED CONCRETE CROSSWALK PAVING PER DETAILS ON SHEET C3.402.
7. INSTALL BOARDING AREA GRAPHICS PER DETAIL ON PLAN SHEET A4.100.
8. CONSTRUCT 11" THICK ASH WAY CEMENT CONCRETE ROADWAY PER DETAIL ON PLAN SHEET C3.402.
9. PROVIDE CONSTRUCTION JOINTS BETWEEN NEW AND OLD WORK PER C3.402.

GENERAL NOTES

1. ALL DIMENSIONS, AND STATION AND REFERENCES ARE TO FACE OF CURB, UNLESS NOTED OTHERWISE.
2. REFER TO C3-SERIES PLANS FOR GEOMETRY POINTS AND GRADING INFORMATION.

PAVEMENT NOTES

1. LONGITUDINAL JOINT: PARALLEL TO DIRECTION OF TRAVEL.
2. TRANSVERSE JOINT: PERPENDICULAR TO DIRECTION OF TRAVEL.
3. DOWEL BARS JOINTS REQUIRED BOTH WAYS.

LEGEND

EXPANSION JOINT

20 0 20 40

SCALE IN FEET

CALL BEFORE YOU DIG 1-800-424-5555

NO.	REVISION COMMENTS	BY	REVIEW	DATE

DESIGNER | DRAWN BY | CHECKED BY

1st Submittal, Rev1 3/22/2022



10/4/21

communitytransit

Swift ORANGE LINE - 100% SUBMITTAL

EDMONDS COLLEGE JOINTING PLANS

WESTERN TERMINUS-EDMONDS COLLEGE

(STATION # EB 3221 & WB 3222)

TITLE

Otak

11241 Willows Road NE, Suite 200
Redmond, WA 98052
425.822.4446
www.otak.com

32880.H
PROJECT NUMBER

C3.310
DRAWING NO.

SHEET 181 OF 622

© 2021 OTAK, INC.

Plotted: Oct 04, 2021 - 6:02pm K:\Project\32800\32880H\CADD\ACAD\Dwg\C3.310-C3.318.dwg Layout Name: C3.310

PDR-009231-2021

A PORTION OF THE NW 1/4 SECTION 20 T. 27N., R. 4E

Lynnwood Edmonds College Terminus

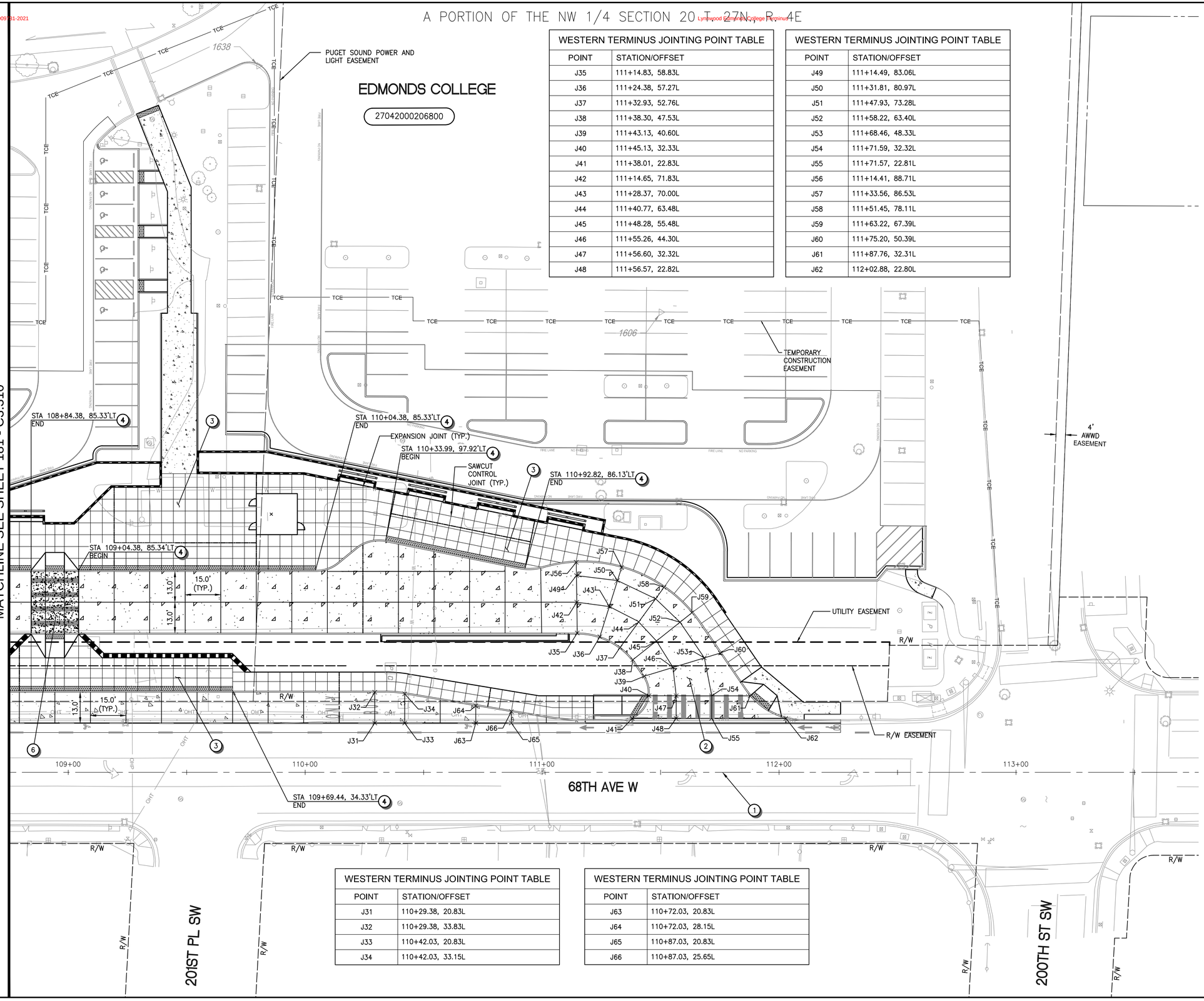

MATCHLINE SEE SHEET 181 - C3.310

WESTERN TERMINUS JOINTING POINT TABLE	
POINT	STATION/OFFSET
J35	111+14.83, 58.83L
J36	111+24.38, 57.27L
J37	111+32.93, 52.76L
J38	111+38.30, 47.53L
J39	111+43.13, 40.60L
J40	111+45.13, 32.33L
J41	111+38.01, 22.83L
J42	111+14.65, 71.83L
J43	111+28.37, 70.00L
J44	111+40.77, 63.48L
J45	111+48.28, 55.48L
J46	111+55.26, 44.30L
J47	111+56.60, 32.32L
J48	111+56.57, 22.82L

WESTERN TERMINUS JOINTING POINT TABLE	
POINT	STATION/OFFSET
J49	111+14.49, 83.06L
J50	111+31.81, 80.97L
J51	111+47.93, 73.28L
J52	111+58.22, 63.40L
J53	111+68.46, 48.33L
J54	111+71.59, 32.32L
J55	111+71.57, 22.81L
J56	111+14.41, 88.71L
J57	111+33.56, 86.53L
J58	111+51.45, 78.11L
J59	111+63.22, 67.39L
J60	111+75.20, 50.39L
J61	111+87.76, 32.31L
J62	112+02.88, 22.80L

WESTERN TERMINUS JOINTING POINT TABLE	
POINT	STATION/OFFSET
J31	110+29.38, 20.83L
J32	110+29.38, 33.83L
J33	110+42.03, 20.83L
J34	110+42.03, 33.15L

WESTERN TERMINUS JOINTING POINT TABLE	
POINT	STATION/OFFSET
J63	110+72.03, 20.83L
J64	110+72.03, 28.15L
J65	110+87.03, 20.83L
J66	110+87.03, 25.65L

CONSTRUCTION NOTES

1. CONSTRUCTION GRID LINE, SEE 100-SERIES SHEETS.
2. CONSTRUCT 15" TRANSIT CENTER CEMENT CONCRETE ROADWAY PANELS PER DETAILS ON C3-4 SERIES PLANS.
3. EDMONDS COLLEGE & MCCOLLUM PARK P&R TRANSIT CENTER PLATFORM PAVING: 5'X5' SQUARE CONTROL JOINTS (TYP.) OR AS SHOWN ON PLANS. PROVIDE EXPANSION JOINTS WHERE SHOWN AND PROVIDE ISOLATION JOINTS WHERE PAVEMENT ABUTS LANDSCAPE PLANTER WALLS, SEAT WALLS AND BUILDING WALLS. SEE TRANSIT PLATFORM JOINTING DETAILS ON SHEET C3.402.
4. 2' WIDE DETECTABLE WARNING SURFACE PER DETAIL ON PLAN SHEET A4.100.
5. LYNNWOOD TRANSIT CENTER PLATFORM PAVING: 2.5'X2.5' SQUARE CONTROL JOINTS (TYP.) OR AS SHOWN ON PLANS. PROVIDE EXPANSION JOINTS WHERE SHOWN AND PROVIDE ISOLATION JOINTS WHERE PAVEMENT ABUTS EXISTING PAVEMENT, BUILDING WALLS, SEAT WALLS, AND LANDSCAPE PLANTER WALLS. SEE TRANSIT PLATFORM JOINTING DETAILS ON SHEET C3.402.
6. COLORED CONCRETE CROSSWALK PAVING PER DETAILS ON SHEET C3.402.
7. INSTALL BOARDING AREA GRAPHICS PER DETAIL ON PLAN SHEET A4.100.
8. CONSTRUCT 11" THICK ASH WAY CEMENT CONCRETE ROADWAY PER DETAIL ON PLAN SHEET C3.402.
9. PROVIDE CONSTRUCTION JOINTS BETWEEN NEW AND OLD WORK PER C3.402.

GENERAL NOTES

1. ALL DIMENSIONS, AND STATION AND REFERENCES ARE TO FACE OF CURB, UNLESS NOTED OTHERWISE.
2. REFER TO C3-SERIES PLANS FOR GEOMETRY POINTS AND GRADING INFORMATION.

PAVEMENT NOTES

1. LONGITUDINAL JOINT: PARALLEL TO DIRECTION OF TRAVEL.
2. TRANSVERSE JOINT: PERPENDICULAR TO DIRECTION OF TRAVEL.
3. DOWEL BARS JOINTS REQUIRED BOTH WAYS.

LEGEND

EXPANSION JOINT

20 0 20 40

SCALE IN FEET

CALL BEFORE YOU DIG 1-800-424-5555

NO.	REVISION COMMENTS	BY	REVIEW	DATE
	1ST Submittal, March 3/22/2022			

DESIGNER | DRAWN BY | CHECKED BY

JEDIDIAH A. SHARLEY — STATE OF WASHINGTON — 40896 — REGISTERED PROFESSIONAL ENGINEER

10/4/21

community transit
Swift ORANGE LINE – 100% SUBMITTAL
EDMONDS COLLEGE JOINTING PLANS
WESTERN TERMINUS-EDMONDS COLLEGE
(STATION # EB 3221 & WB 3222)

TITLE

Otak
11241 Willows Road NE, Suite 200
Redmond, WA 98052
425.822.4446
www.otak.com

32880.H
PROJECT NUMBER

C3.311
DRAWING NO.

SHEET 182 OF 622

© 2021 OTAK, INC.

Plotted: Oct 04, 2021 – 6:02pm K:\Project\32800\32880H\CADD\ACAD\Dwg\C3.310-C3.318.dwg Layout Name: C3.311

PDR-009731-2021

Lynnwood Edmonds College Terminus

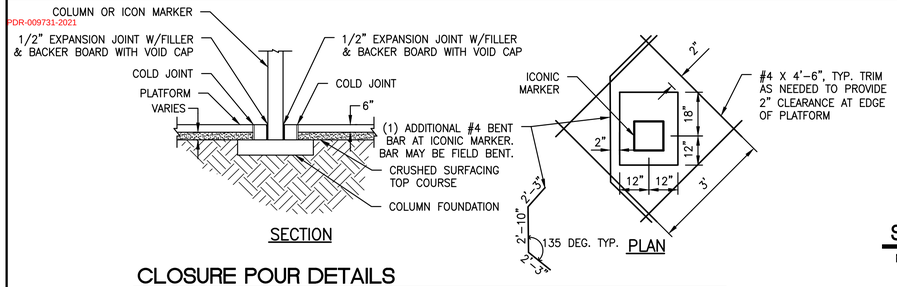

CLOSURE POUR DETAILS

NOT TO SCALE

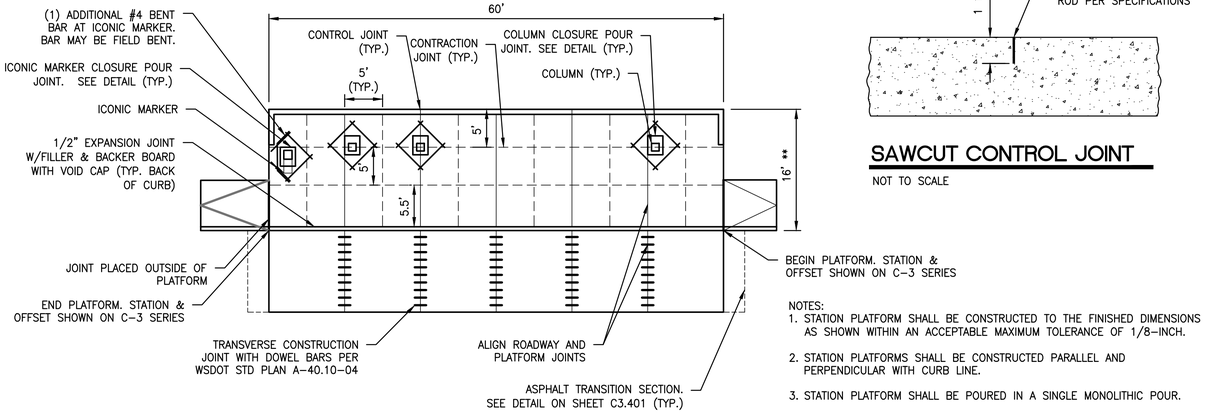

NOTES:
1. STATION PLATFORM SHALL BE CONSTRUCTED TO THE FINISHED DIMENSIONS AS SHOWN WITHIN AN ACCEPTABLE MAXIMUM TOLERANCE OF 1/8-INCH.
2. STATION PLATFORMS SHALL BE CONSTRUCTED PARALLEL AND PERPENDICULAR WITH CURB LINE.
3. STATION PLATFORM SHALL BE POURED IN A SINGLE MONOLITHIC POUR.

**MODIFIED STATION PLATFORM WIDTH AT WB 164TH ST SE AT MILL CREEK BLVD (STATION #3236) IS 12'-8".

STATION PLATFORM AND CONCRETE ROADWAY JOINTING DETAIL

NOT TO SCALE

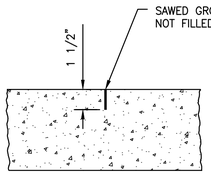

SAWCUT CONTRACTION JOINT

NOT TO SCALE

SAWCUT CONTROL JOINT

NOT TO SCALE

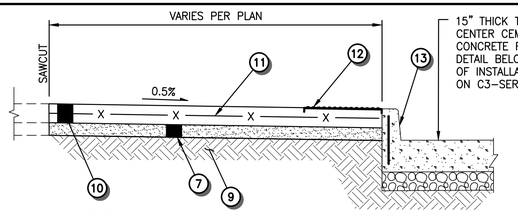

LYNNWOOD TRANSIT CENTER SECTION

NOT TO SCALE

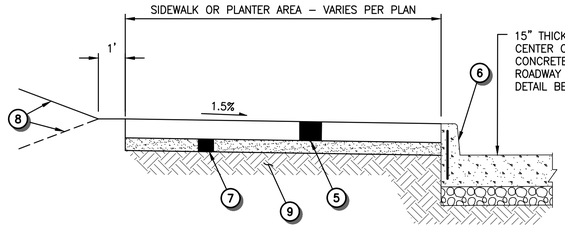

ASH WAY PARK AND RIDE SECTION

NOT TO SCALE

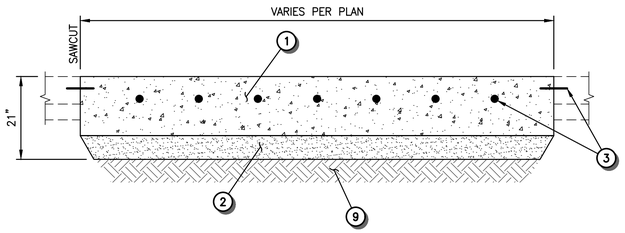

15" THICK TRANSIT CENTER CEMENT CONCRETE ROADWAY SECTION

WB/EB ASH WAY PARK & RIDE (STATION #3239 & 3233) & WB LYNNWOOD TRANSIT CENTER (STATION #3244)
NOT TO SCALE

CONSTRUCTION NOTES

1. 15" CEMENT CONCRETE PAVEMENT, 24 HR. LIMITS OF CEMENT CONCRETE PAVEMENT INSTALLATION SHOWN ON C3 SERIES PLANS.
2. 6" COMPACTED DEPTH CRUSHED SURFACE BASE COURSE.
3. DOWEL BAR (TRANSVERSE JOINT) OR TIE BAR (LONGITUDINAL JOINT) PER WSDOT STD PLAN A-60.10-03.
4. NOT USED.
5. CEMENT CONCRETE SIDEWALK PER WSDOT STD PLAN F-30.10-04.
6. 10" HEIGHT DOWELED CURB PER DETAIL ON SHEET C3.401. CURB HEIGHT VARIES BETWEEN 6" AND 10" AS SHOWN ON PLANS.
7. 4" COMPACTED DEPTH CRUSHED SURFACING TOP COURSE.
8. FINISH GRADE NOT TO EXCEED 3H:1V IN CUT OR FILL AREA, UNLESS NOTED OTHERWISE.
9. SUBGRADE COMPACTED TO 95% OF MAXIMUM DENSITY PER ASTM D-1557. SUBGRADE TO CONSIST OF UNDISTURBED NATIVE MATERIALS OR STRUCTURAL FILL. STRUCTURAL FILL MATERIAL TO CONSIST OF SUITABLE ON-SITE MATERIALS OR GRAVEL BORROW AS DESCRIBED IN SPECIFICATIONS.
10. 6" DEPTH CEMENT CONCRETE TRANSIT CENTER PLATFORM
11. W4.0xW4.0 – 6X6 @ MID HEIGHT OF SLAB.
12. DETECTABLE WARNING PAVER STRIP, LIMITS PER PLAN. SEE SHEET C5.400 FOR DETAILS.
13. 6" HEIGHT DOWELED CURB PER DETAIL ON SHEET C3.401. LIMITS OF CURB INSTALLATION SHOWN ON C3 SERIES PLANS.

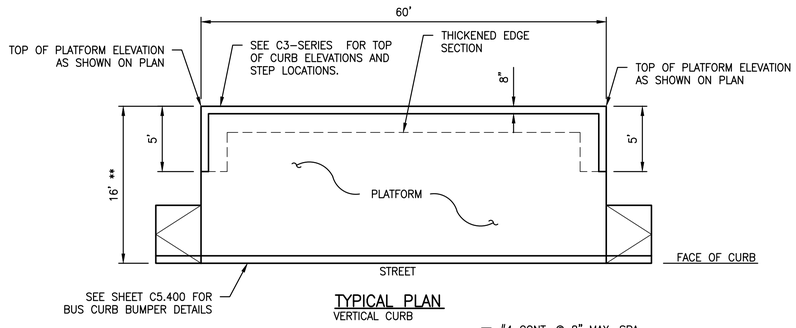

TYPICAL PLAN
VERTICAL CURB

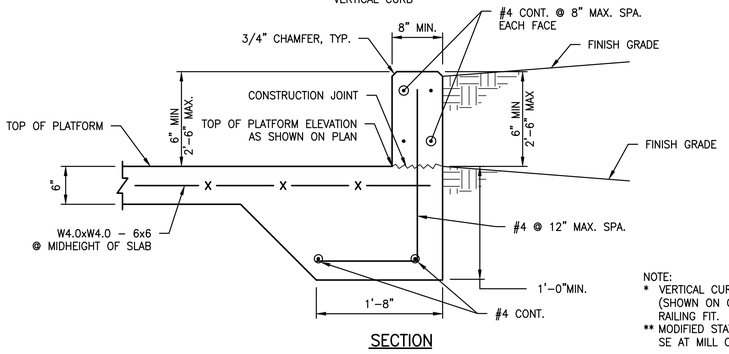

SECTION

NOTE:
* VERTICAL CURB WIDTH, HEIGHT AND STEP LOCATIONS (SHOWN ON C3-SERIES) ARE CRITICAL TO STATION RAILING FIT.
** MODIFIED STATION PLATFORM WIDTH AT WB 164TH ST SE AT MILL CREEK BLVD (STATION #3236) IS 12'-8".

STATION PLATFORM - VERTICAL CURB

NOT TO SCALE

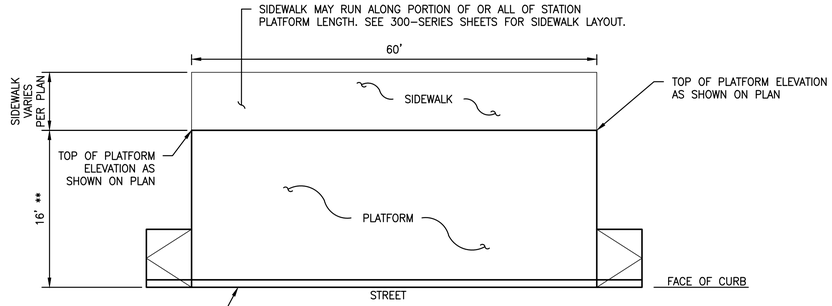

TYPICAL PLAN
SIDEWALK BEHIND PLATFROM

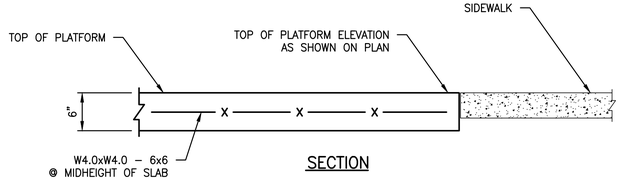

SECTION

NOTES

THIS DETAIL APPLIES TO THE FOLLOWING STATIONS ONLY:

1. EB 196TH ST SW/SR524 AT PACIFIC HWY/SR99 (STATION #3225)
2. EB ALDERWOOD MALL BLVD AT 44TH AVE W (STATION #3228)
3. WB 164TH ST SW AT NORTH RD (STATION #3237)
4. WB 164TH ST SE AT MILL CREEK BLVD (STATION #3236)
5. EASTERN TERMINUS – MCCOLLUM PARK P&R (STATION #EB 3223 & WB 3224)

STATION PLATFORM - SIDEWALK BEHIND

NOT TO SCALE

CALL BEFORE YOU DIG 1-800-424-5555

NO.	REVISION COMMENTS	BY	REVIEW	DATE

DESIGNER | DRAWN BY | CHECKED BY

1st Submittal, 3/22/2022

JEDI A. SHARLEY — STATE OF WASHINGTON — 40896 — REGISTERED PROFESSIONAL ENGINEER

10/1/21

communitytransit
Swift ORANGE LINE – 100% SUBMITTAL
SITE GRADING AND PAVING DETAILS

TITLE

Otak
11241 Willows Road NE, Suite 200
Redmond, WA 98052
425.822.4446
www.otak.com

32880.H
PROJECT NUMBER

C3.400
DRAWING NO.

SHEET 189 OF 622

© 2021 OTAK, INC.

Plotted: Oct 01, 2021 – 1:27pm K:\Project\32800\32880H\CADD\ACAD\Dwg\C3.400-C3.402.dwg Layout Name: C3.400

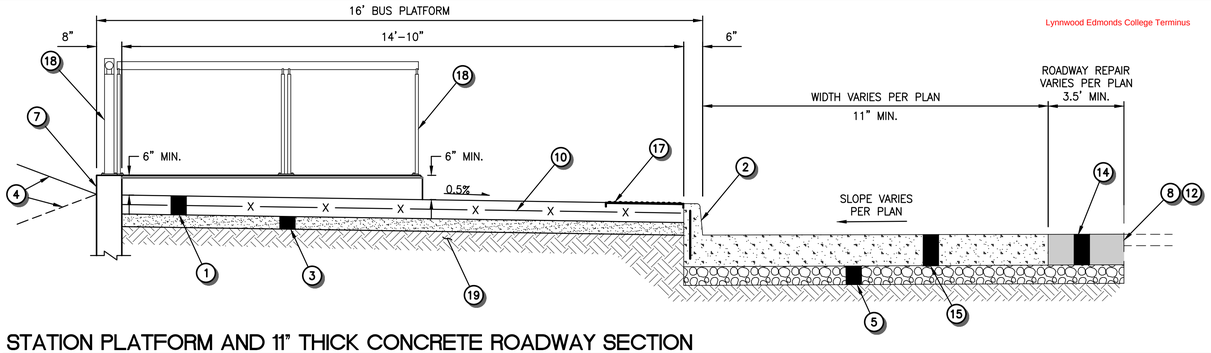

NOTES:
1. STATION PLATFORM CROSS-SLOPE DESIGNED AT 0.5% CONSTRUCTED CROSS-SLOPE SHALL NOT EXCEED 0.75% MAX. CONTRACTOR SHALL ACCOUNT FOR MATERIAL AND FINISHING TOLERANCES WITHIN THIS LIMIT.
2. STATION PLATFORM ELEMENTS SHALL BE CONSTRUCTED TO A MAXIMUM ACCEPTABLE TOLERANCE OF 1/8-INCH OF DIMENSIONS SHOWN.

STATION PLATFORM AND 11" THICK CONCRETE ROADWAY SECTION

NOT TO SCALE

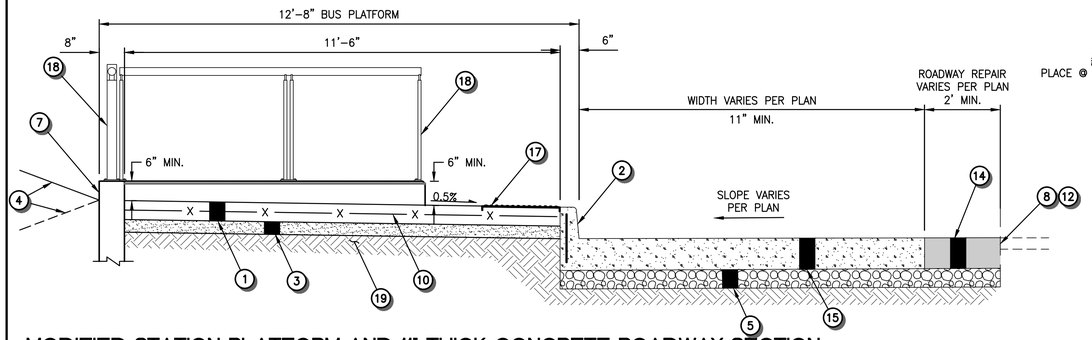

MODIFIED STATION PLATFORM AND 11" THICK CONCRETE ROADWAY SECTION

NOT TO SCALE

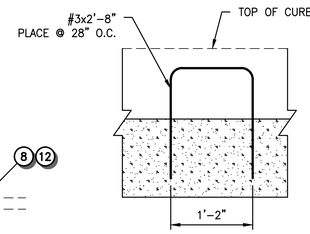

CONCRETE ROADWAY 10" CURB DETAIL

NOT TO SCALE

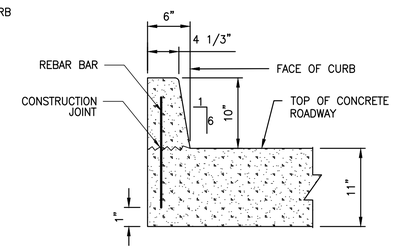

STATION PLATFORM AND ROADWAY SECTION NOTES

1. 6" DEPTH CEMENT CONCRETE STATION PLATFORM.
2. 10" HEIGHT DOWELED CURB PER DETAIL ON THIS SHEET.
3. 4" COMPACTED DEPTH CRUSHED SURFACING TOP COURSE.
4. FINISH GRADE NOT TO EXCEED 3H:1V IN CUT OR FILL AREA, UNLESS NOTED OTHERWISE.
5. 6" COMPACTED DEPTH CRUSHED SURFACING BASE COURSE.
6. 4" DEPTH CEMENT CONCRETE RAMP.
7. CEMENT CONCRETE VERTICAL CURB OR WALL PER PLAN.
8. SAWCUT 24" MIN. FROM EDGE OF PAVEMENT, UNLESS OTHERWISE SHOWN ON PLAN.
9. CONSTRUCT CEMENT CONCRETE CURB AND GUTTER PER WSDOT STD PLAN F-10.12-04 AT LOCATIONS SHOWN ON C3-SERIES. IN CITY OF MILL CREEK JURSIDICTION, GUTTER PAN SHALL BE 1.5-FEET WIDE MEASURED FROM FACE OF CURB.
10. W4.0xW4.0 – 6X6 @ MIDHEIGHT OF SLAB.
11. 2" COMPACTED DEPTH HMA, CLASS ½", PG 70-22.
12. AR 4000 JOINT SEALER.
13. 1/4 INCH PREMOLDED JOINT FILLER ON RAMP SIDE OF PLATFORM (OUTSIDE OF PLATFORM).
14. 11" COMPACTED DEPTH HMA, CLASS ½", PG 70-22.
15. 11" CEMENT CONCRETE ROADWAY PAVEMENT.
16. 9" COMPACTED DEPTH HMA, CLASS ½", PG 70-22.
17. DETECTABLE WARNING PAVER STRIP, SEE SHEET A1.2 FOR DETAILS.
18. STATION RAILING WHERE SHOWN, SEE A-SERIES SHEETS FOR DETAILS.
19. SUBGRADE COMPACTED TO 95% OF MAXIMUM DENSITY PER ASTM D-1557. SUBGRADE TO CONSIST OF UNDISTURBED NATIVE MATERIALS OR STRUCTURAL FILL. STRUCTURAL FILL MATERIAL TO CONSIST OF SUITABLE ON-SITE MATERIALS OR GRAVEL BORROW AS DESCRIBED IN SPECIFICATIONS.
20. 6" COMPACTED DEPTH HMA, CLASS ½", PG 70-22.
21. CURB AND GUTTER RAMP TRANSITION PER ON THIS SHEET.

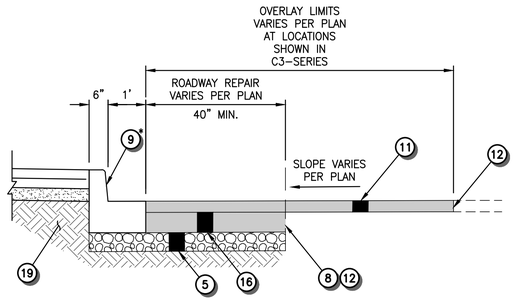

* CURB SHALL BE SLOPED MOUNTABLE PER WSDOT STD PLAN F-10.62-02 AT 164TH ST SW AT I-5 TRAFFIC ISLANDS. SEE C3.5-SERIES FOR DETAILS.

ASPHALT PAVEMENT REPAIR AND OVERLAY SECTION

NOT TO SCALE

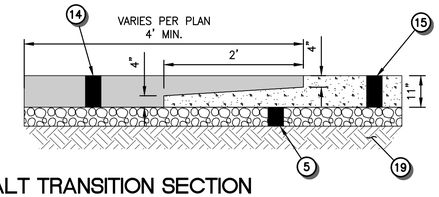

ASPHALT TRANSITION SECTION

NOT TO SCALE

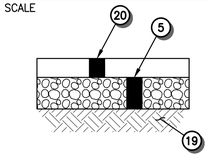

PARKING LOT/DRIVEWAY ASPHALT REPAIR DETAIL PAVEMENT SECTION

NOT TO SCALE

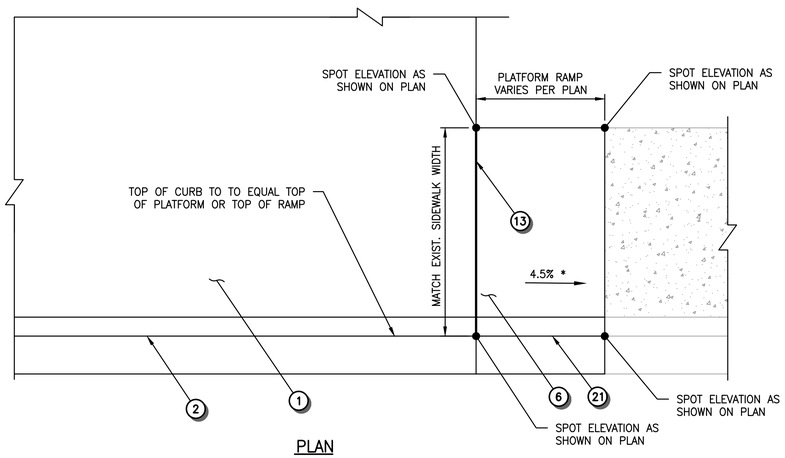

TYPICAL STATION PLATFORM RAMP

NOT TO SCALE

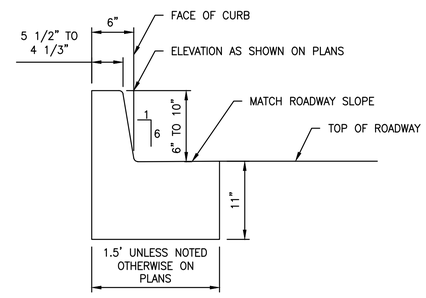

CURB AND GUTTER RAMP TRANSITION DETAIL

NOT TO SCALE

NOTE:
* STATION PLATFORM RAMPS SHALL NOT EXCEED 5.0% RUNNING SLOPE. CONTRACTOR SHALL ACCOUNT FOR MATERIAL AND FINISHING TOLERANCES WITHIN THIS LIMIT.

NO.	REVISION COMMENTS	BY	REVIEW	DATE

DESIGNER

DRAWN BY

CHECKED BY

JEDI A. SHARLEY
STATE OF WASHINGTON
40896
REGISTERED
PROFESSIONAL ENGINEER

10/1/21

communitytransit Swift ORANGE LINE – 100% SUBMITTAL
SITE GRADING AND PAVING DETAILS

TITLE

Otak
11241 Willows Road NE, Suite 200
Redmond, WA 98052
425.822.4446
www.otak.com

32880.H
PROJECT NUMBER

C3.401
DRAWING NO.

SHEET 190 OF 622

© 2021 OTAK, INC.

CALL BEFORE YOU DIG 1-800-424-5555

Plotted: Oct 01, 2021 - 1:31pm K:\Project\32800\32880H\CADD\ACAD\Dwg\C3.400-C3.402.dwg Layout Name: C3.401

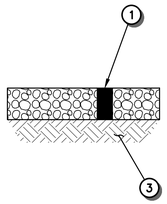

GRAVEL ACCESS ROAD DETAIL

NOT TO SCALE

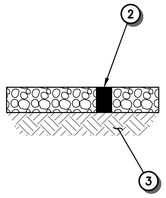

GRAVEL PATHWAY DETAIL

NOT TO SCALE

STATION PLATFORM AND ROADWAY SECTION NOTES

1. 6" COMPACTED DEPTH CRUSHED SURFACING BASE COURSE.
2. 4" COMPACTED DEPTH CRUSHED SURFACING TOP COURSE.
3. SUBGRADE COMPACTED TO 95% OF MAXIMUM DENSITY PER ASTM D-1557. SUBGRADE TO CONSIST OF UNDISTURBED NATIVE MATERIALS OR STRUCTURAL FILL. STRUCTURAL FILL MATERIAL TO CONSIST OF SUITABLE ON-SITE MATERIALS OR GRAVEL BORROW AS DESCRIBED IN SPECIFICATIONS.
4. CEMENT CONCRETE SIDEWALK PER WSDOT STD PLAN F-30.10-04. STRUCTURAL SIDEWALK AT LOCATIONS SHOWN ON C3-SERIES.
5. 11" CEMENT CONCRETE ROADWAY PAVEMENT.
6. 11" COMPACTED DEPTH HMA , CLASS 1/2", PG 70-22.
7. SAWCUT 24" MIN. FROM EDGE OF PAVEMENT, UNLESS OTHERWISE SHOWN ON PLAN.
8. AR 4000 JOINT SEALER.
9. FINISH GRADE NOT TO EXCEED 3H:1V IN CUT OR FILL AREA, UNLESS NOTED OTHERWISE.
10. 10" HEIGHT DOWELED CURB PER DETAIL ON SHEET C3.401. CURB HEIGHT VARIES BETWEEN 6" AND 10" AS SHOWN ON PLANS.

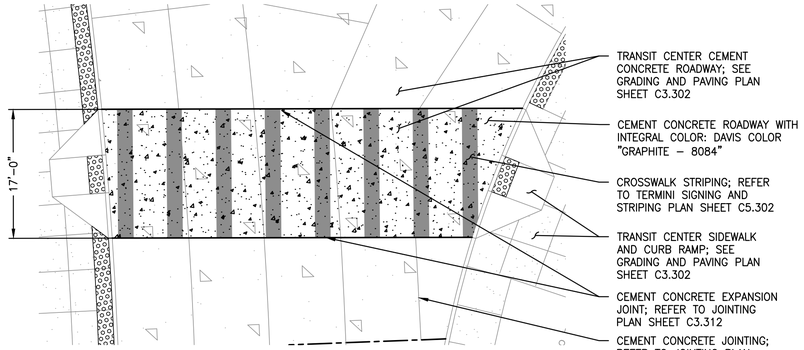

COLORED CONCRETE CROSSWALK PAVING AT MCCOLLUM PARK PARK + RIDE

NOT TO SCALE

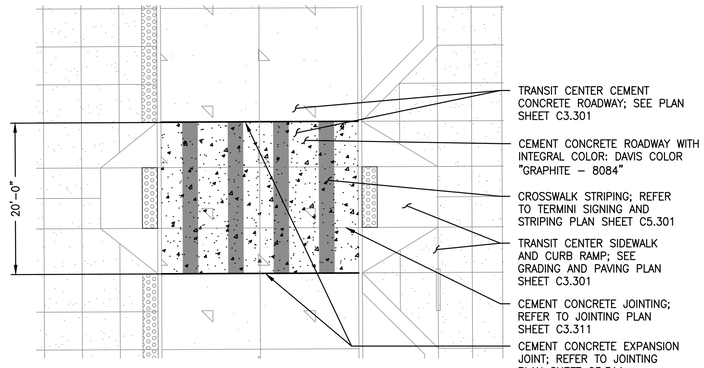

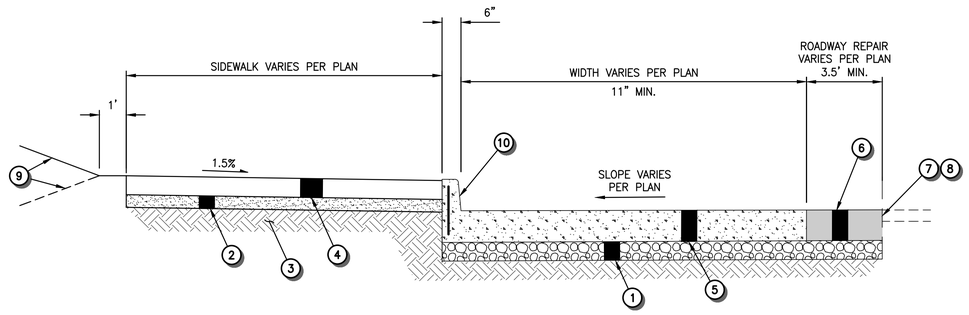

11" THICK ASH WAY CEMENT CONCRETE ROADWAY SECTION

WB/EB ASH WAY PARK & RIDE (STATION #3239 & 3233)
NOT TO SCALE

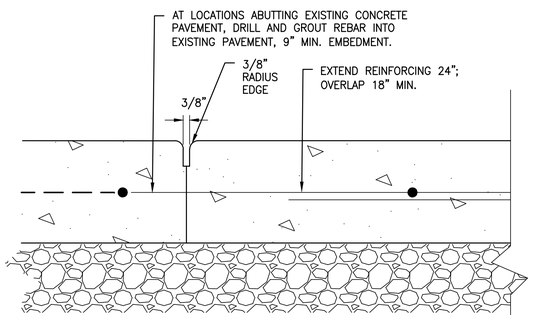

CONSTRUCTION JOINT

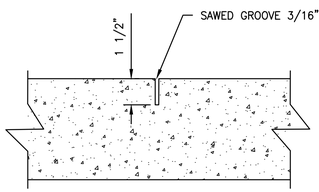

SAWCUT CONTROL JOINT

COLORED CONCRETE CROSSWALK PAVING AT EDMONDS COLLEGE

NOT TO SCALE

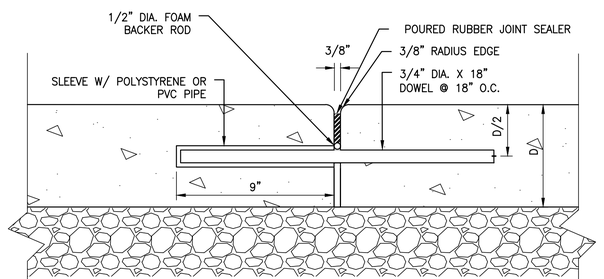

EXPANSION JOINT

NOTE:
PROVIDE EXPANSION JOINTS AS SHOWN ON PLANS.

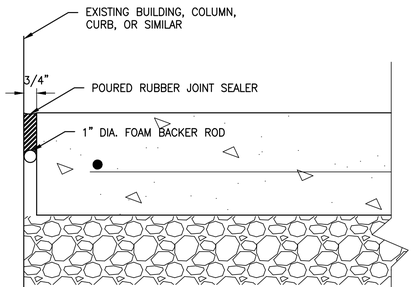

ISOLATION JOINT

TRANSIT PLATFORM AND 15" TRANSIT CENTER CEMENT CONCRETE ROADWAY JOINTING DETAILS

NOT TO SCALE

CALL BEFORE YOU DIG 1-800-424-5555

NO.	REVISION COMMENTS	BY	REVIEW	DATE

DESIGNER | DRAWN BY | CHECKED BY

JEDI A. SHAPLEY — STATE OF WASHINGTON — 40896 — REGISTERED PROFESSIONAL ENGINEER

9/24/21

community transit

Swift ORANGE LINE - 100% SUBMITTAL

SITE GRADING AND PAVING DETAILS

TITLE

Otak

11241 Willows Road NE, Suite 200
Redmond, WA 98052
425.822.4446
www.otak.com

32880.H
PROJECT NUMBER

C3.402
DRAWING NO.

SHEET 191 OF 622

© 2021 OTAK, INC.

Plotted: Sep 27, 2021 - 9:58am K:\Project\32800\32880H\CADD\ACAD\Dwg\C3.400-C3.402.dwg Layout Name: C3.402

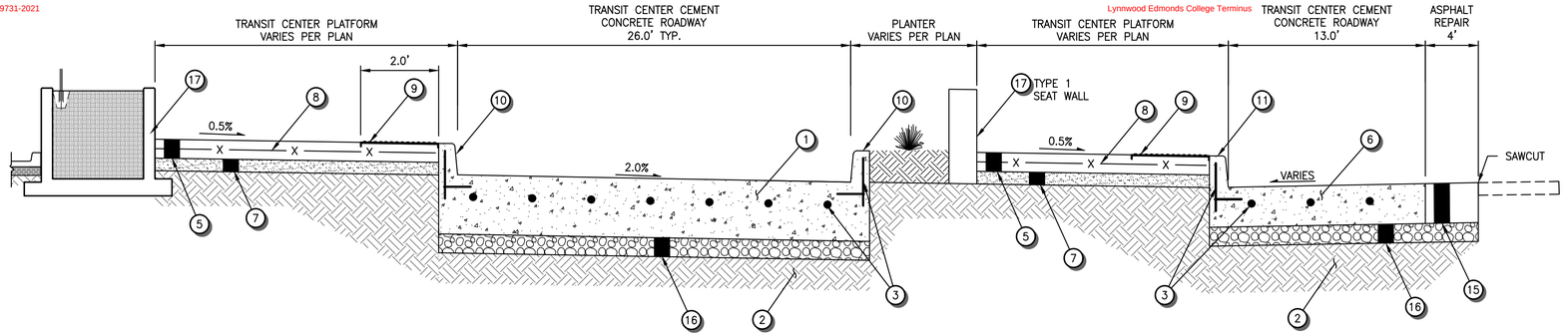

A C3.300

EDMONDS COLLEGE TRANSIT CENTER TYPICAL SECTION

NOT TO SCALE

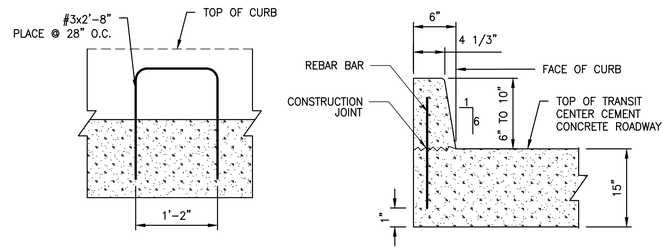

TRANSIT CENTER CEMENT CONCRETE ROADWAY 6"-10" CURB DETAIL

NOT TO SCALE

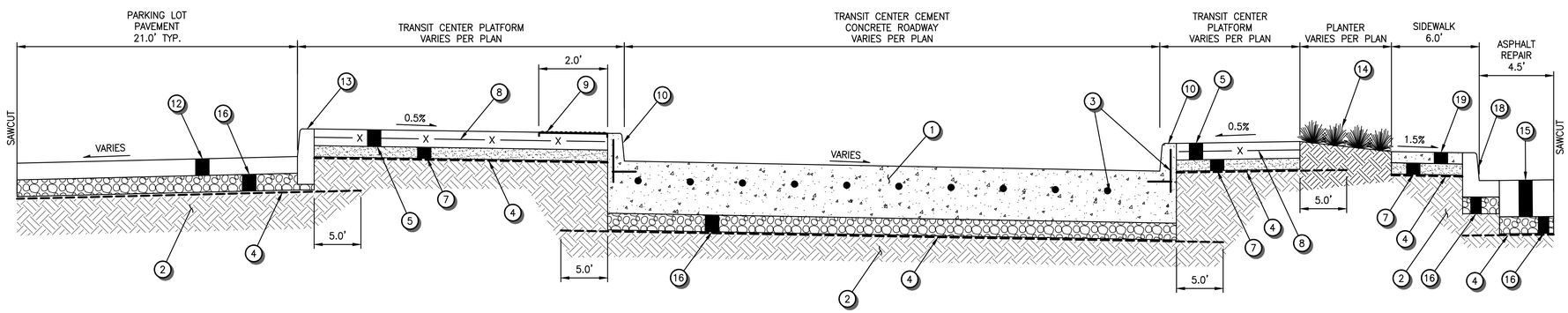

B C3.302

McCOLLUM PARK TRANSIT CENTER TYPICAL SECTION

NOT TO SCALE

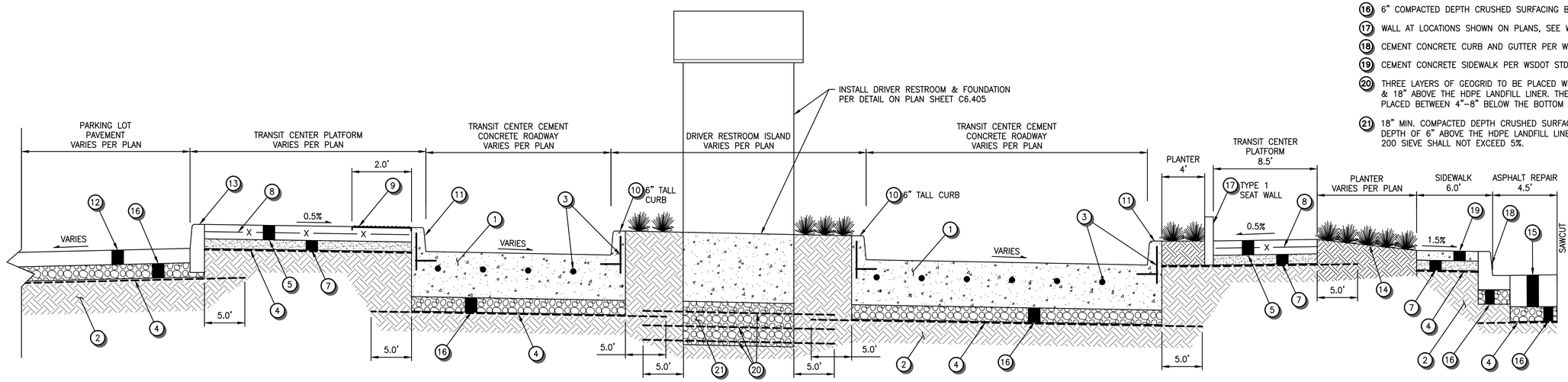

C C3.303

McCOLLUM PARK TRANSIT CENTER DRIVER RESTROOM ISLAND SECTION

NOT TO SCALE

CONSTRUCTION NOTES

1. 15" TRANSIT CENTER CEMENT CONCRETE ROADWAY, 24 HR.
2. SUBGRADE COMPACTED TO 95% OF MAXIMUM DENSITY PER ASTM D-1557. SUBGRADE TO CONSIST OF UNDISTURBED NATIVE MATERIALS OR STRUCTURAL FILL. STRUCTURAL FILL MATERIAL TO CONSIST OF SUITABLE ON-SITE MATERIALS OR GRAVEL BORROW AS DESCRIBED IN SPECIFICATIONS. AT MCCOLLUM PARK P&R, WHERE FINISHED GRADE IS OVER 2-FEET HIGHER THAN EXISTING GRADE, FILL MATERIAL SHALL BE PLACED 4 WEEKS IN ADVANCE OF CONSTRUCTING UTILITIES, STRUCTURES, AND HARDSCAPE. ADDITIONAL FILL OR PRELOAD TO BE CONSIDERED IN AREAS OF HEAVIER STRUCTURES OF FOUNDATIONS PER GEOTECHNICAL RECOMMENDATIONS. EXPOSED SUBGRADE SHALL BE EVALUATED BY A GEOTECHNICAL ENGINEER PRIOR TO PLACEMENT OF STRUCTURAL FILL & GEOGRID.
3. DOWEL BAR (TRANSVERSE JOINT) OR TIE BAR (LONGITUDINAL JOINT) PER WSDOT STD PLAN A-60.10-03.
4. INSTALL GEOGRID PER GEOTECHNICAL RECOMMENDATIONS AT McCOLLUM PARK TERMINI. GEOGRID TO EXTEND 5FT BEYOND EDGE OF PLATFORMS, ROADWAYS, AND FOUNDATION ELEMENTS. PLACE ON GRANULAR SUBGRADE OR WITHIN CRUSHED ROCK LAYER PER GEOTECHNICAL ENGINEER DIRECTION.
5. 6" DEPTH CEMENT CONCRETE TRANSIT CENTER PLATFORM.
6. 11" CEMENT CONCRETE ROADWAY 24 HR.
7. 4" COMPACTED DEPTH CRUSHED SURFACING TOP COURSE.
8. W4.0xW4.0 – 6x6 @ MIDHEIGHT OF SLAB.
9. DETECTABLE WARNING SURFACE PER WSDOT STD. PLAN F-45.10-03, LIMITS PER C3.31-SERIES JOINTING PLANS.
10. 6"-10" TRANSIT CENTER CEMENT CONCRETE ROADWAY DOWELED CURB PER DETAIL ON THIS SHEET. CURB HEIGHT VARIES BETWEEN 6" AND 10" AS SHOWN ON PLANS.
11. 10" HEIGHT DOWELED CURB, SEE SHEET C3.401.
12. 6" COMPACTED DEPTH HMA CL. ½" P.G. 70-22.
13. 6" HEIGHT CEMENT CONCRETE TRAFFIC CURB PER WSDOT STD PLAN F-10.12-04.
14. SEE LANDSCAPING PLANS FOR DETAILS.
15. 11" COMPACTED DEPTH HMA CL. ½" P.G. 70-22.
16. 6" COMPACTED DEPTH CRUSHED SURFACING BASE COURSE.
17. WALL AT LOCATIONS SHOWN ON PLANS, SEE W-SERIES FOR DETAILS.
18. CEMENT CONCRETE CURB AND GUTTER PER WSDOT STD PLAN F-10.12-04.
19. CEMENT CONCRETE SIDEWALK PER WSDOT STD PLAN F-30.10-04.
20. THREE LAYERS OF GEOGRID TO BE PLACED WITHIN CSBC LAYER APPROX. 6", 12", & 18" ABOVE THE HDPE LANDFILL LINER. THE TOP GEOGRID LAYER SHALL BE PLACED BETWEEN 4"-8" BELOW THE BOTTOM OF THE RESTROOM FOUNDATION.
21. 18" MIN. COMPACTED DEPTH CRUSHED SURFACING BASE COURSE OR PLACE TO A DEPTH OF 6" ABOVE THE HDPE LANDFILL LINER. FINES CONTENT PASSING NO. 200 SIEVE SHALL NOT EXCEED 5%.

CALL BEFORE YOU DIG 1-800-424-5555

NO.	REVISION COMMENTS	BY	REVIEW	DATE

DESIGNER

DRAWN BY

CHECKED BY

KEVIN C. KRAXBERGER
STATE OF WASHINGTON
39870
REGISTERED
PROFESSIONAL ENGINEER

10/10/21

100% SUBMITTAL

communitytransit

Swift ORANGE LINE – 100% SUBMITTAL
SITE GRADING AND PAVING DETAILS
TERMINI ROADWAY SECTIONS

TITLE

Otak
11241 Willows Road NE, Suite 200
Redmond, WA 98052
425.822.4446
www.otak.com

32880.H
PROJECT NUMBER

C3.403
DRAWING NO.

SHEET 192 OF 622

© 2021 OTAK, INC.

Plotted: Oct 10, 2021 – 6:23pm K:\Project\32800\32880H\CADD\ACAD\Dwg\C3.403.dwg Layout Name: C3.403

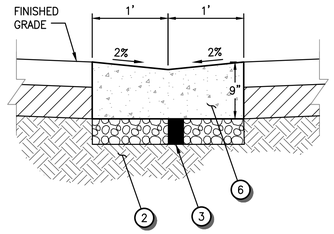

CEMENT CONCRETE VALLEY GUTTER

NTS

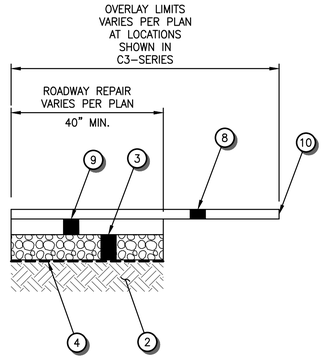

PARK ROAD ASPHALT PAVEMENT REPAIR + OVERLAY SECTION - McCOLLUM PARK P+R

NTS

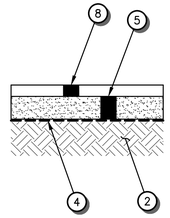

ASPHALT PATH TYPICAL SECTION - McCOLLUM PARK P+R

NTS

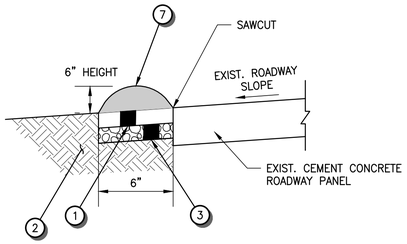

ASPHALT BERM - EDMONDS COLLEGE

NTS

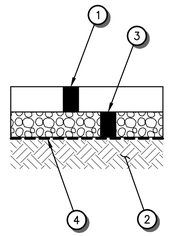

PARKING LOT/DRIVEWAY ASPHALT REPAIR DETAIL McCOLLUM PARK P+R

NTS

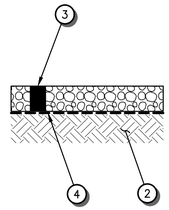

GRAVEL ACCESS ROAD SECTION - McCOLLUM PARK P+R

NTS

CONSTRUCTION NOTES

1. 6" COMPACTED DEPTH HMA CL. ½" P.G. 70-22.
2. SUBGRADE COMPACTED TO 95% OF MAXIMUM DENSITY PER ASTM D-1557. SUBGRADE TO CONSIST OF UNDISTURBED NATIVE MATERIALS OR STRUCTURAL FILL. STRUCTURAL FILL MATERIAL TO CONSIST OF SUITABLE ON-SITE MATERIALS OR GRAVEL BORROW AS DESCRIBED IN SPECIFICATIONS. AT McCOLLUM PARK P&R, WHERE FINISHED GRADE IS OVER 2-FEET HIGHER THAN EXISTING GRADE, FILL MATERIAL SHALL BE PLACED 4 WEEKS IN ADVANCE OF CONSTRUCTING UTILITIES, STRUCTURES, AND HARDSCAPE. ADDITIONAL FILL OR PRELOAD TO BE CONSIDERED IN AREAS OF HEAVIER STRUCTURES OF FOUNDATIONS PER GEOTECHNICAL RECOMMENDATIONS. EXPOSED SUBGRADE SHALL BE EVALUATED BY A GEOTECHNICAL ENGINEER PRIOR TO PLACEMENT OF STRUCTURAL FILL & GEOGRID.
3. 6" COMPACTED DEPTH CRUSHED SURFACING BASE COURSE.
4. INSTALL GEOGRID PER GEOTECHNICAL RECOMMENDATIONS AT McCOLLUM PARK TERMINI. GEOGRID TO EXTEND 5FT BEYOND EDGE OF PLATFORMS, ROADWAYS, AND FOUNDATION ELEMENTS. PLACE ON GRANULAR SUBGRADE OR WITHIN CRUSHED ROCK LAYER PER GEOTECHNICAL ENGINEER DIRECTION.
5. 4" COMPACTED DEPTH CRUSHED SURFACING TOP COURSE.
6. CEMENT CONCRETE CLASS 4000.
7. ASPHALT RAINSTOP (COMMERCIAL HMA).
8. 2" COMPACTED DEPTH HMA CL. ½" P.G. 70-22.
9. 4" COMPACTED DEPTH HMA CL. ½" P.G. 70-22.
10. AR 4000 JOINT SEALER.
11. 11" COMPACTED DEPTH HMA CL. ½" P.G. 70-22.
12. CONSTRUCT CEMENT CONCRETE CURB AND GUTTER PER WSDOT STD PLAN F-10.12-04 AT LOCATIONS SHOWN ON C3-SERIES.

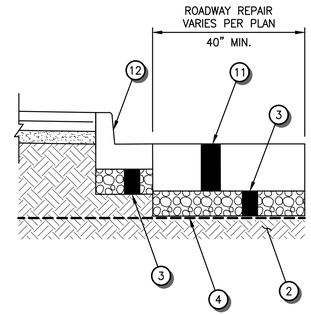

DUMAS ROAD ASPHALT PAVEMENT REPAIR SECTION McCOLLUM PARK P+R

NTS

CALL BEFORE YOU DIG 1-800-424-5555

NO.	REVISION COMMENTS	BY	REVIEW	DATE

DESIGNER | DRAWN BY | CHECKED BY

1st Submittal, 3/22/2022

KEVIN C. KRAXBERGER — STATE OF WASHINGTON — 39870 — REGISTERED PROFESSIONAL ENGINEER

10/11/21

community transit

Swift ORANGE LINE - 100% SUBMITTAL

SITE GRADING AND PAVING DETAILS

TERMINI ROADWAY SECTIONS

TITLE

Otak

11241 Willows Road NE, Suite 200
Redmond, WA 98052
425.822.4446
www.otak.com

32880.H
PROJECT NUMBER

C3.404
DRAWING NO.

SHEET 193 OF 622

© 2021 OTAK, INC.

Plotted: Oct 11, 2021 - 2:20pm K:\Project\32800\32880H\CADD\ACAD\Dwg\C3.404.dwg Layout Name: C3.404

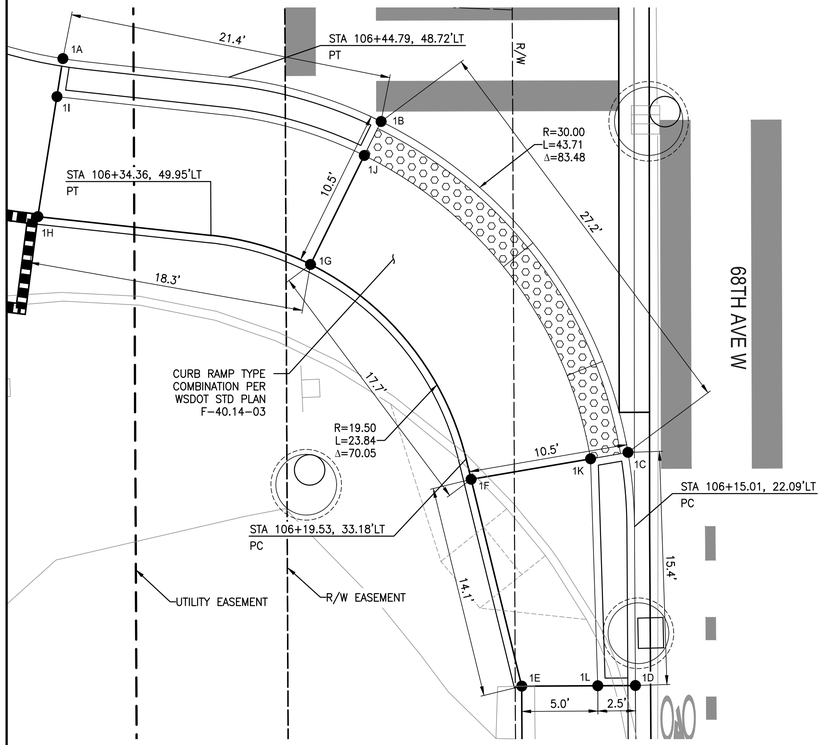

CURB RAMPS			
POINT	ALIGNMENT	STATION/OFFSET	ELEVATION
1A	68TH AVE W CCL	106+46.06, 59.66'LT	442.94 FL 443.44 TOC
1B	68TH AVE W CCL	106+41.82, 38.69'LT	442.29 FL 442.79 TOC
1C	68TH AVE W CCL	106+19.92, 22.50'LT	441.93 FL 442.43 TOC
1D	68TH AVE W CCL	106+04.53, 22.07'LT	441.78 FL 442.28 TOC
1E	68TH AVE W CCL	106+04.52, 29.57'LT	442.39
1F	68TH AVE W CCL	106+18.19, 32.85'LT	442.00 FL 442.50 TOC
1G	68TH AVE W CCL	106+32.41, 43.39'LT	442.34 FL 442.84 TOC
1H	68TH AVE W CCL	106+35.65, 61.36'LT	443.49
1I	68TH AVE W CCL	106+43.55, 60.07'LT	443.45
1J	68TH AVE W CCL	106+39.58, 39.81'LT	442.30 FL 442.80 TOC
1K	68TH AVE W CCL	106+19.50, 24.96'LT	441.95 FL 442.45 TOC
1L	68TH AVE W CCL	106+04.53, 24.55'LT	442.32

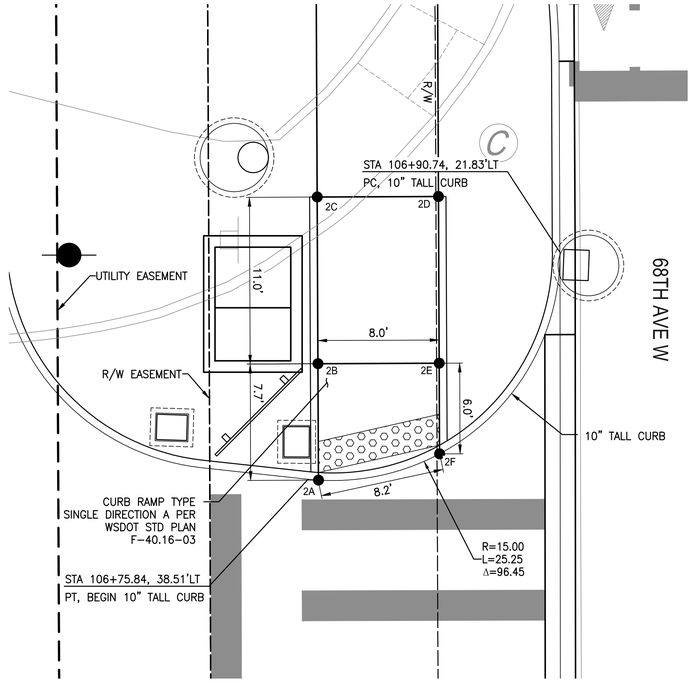

CURB RAMPS			
POINT	ALIGNMENT	STATION/OFFSET	ELEVATION
2A	68TH AVE W CCL	106+75.77, 37.83'LT	442.70 FL 443.53 TOC 10" TALL CURB
2B	68TH AVE W CCL	106+83.45, 37.83'LT	442.77 FL 443.60 TOC 10" TALL CURB
2C	68TH AVE W CCL	106+94.45, 37.83'LT	443.32
2D	68TH AVE W CCL	106+94.45, 29.83'LT	443.28
2E	68TH AVE W CCL	106+83.45, 29.83'LT	442.65 FL 443.48 TOC 10" TALL CURB
2F	68TH AVE W CCL	106+77.47, 29.83'LT	442.59 FL 443.42 TOC 10" TALL CURB

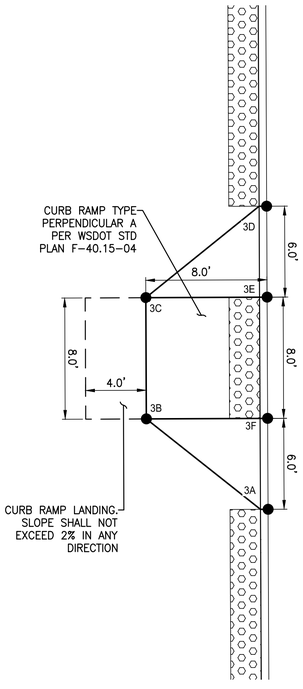

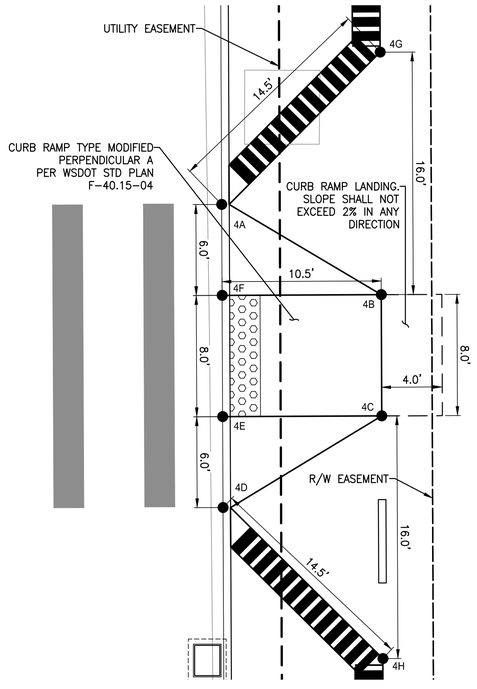

CURB RAMPS			
POINT	ALIGNMENT	STATION/OFFSET	ELEVATION
3A	68TH AVE W CCL	108+84.38, 84.83'LT	443.02 FL 443.52 TOC
3B	68TH AVE W CCL	108+90.38, 92.83'LT	443.53
3C	68TH AVE W CCL	108+98.38, 92.83'LT	443.49
3D	68TH AVE W CCL	109+04.38, 84.84'LT	442.92 FL 443.42 TOC
3E	68TH AVE W CCL	108+98.38, 84.83'LT	442.95 FL
3F	68TH AVE W CCL	108+90.38, 84.83'LT	442.99 FL

CURB RAMPS			
POINT	ALIGNMENT	STATION/OFFSET	ELEVATION
4A	68TH AVE W CCL	109+04.38, 58.83'LT	442.40 FL 442.90 TOC
4B	68TH AVE W CCL	108+98.38, 48.33'LT	441.62
4C	68TH AVE W CCL	108+90.39, 48.33'LT	441.66
4D	68TH AVE W CCL	108+84.38, 58.83'LT	442.50 FL 443.00 TOC
4E	68TH AVE W CCL	108+90.38, 58.83'LT	442.47 FL
4F	68TH AVE W CCL	108+98.38, 58.83'LT	442.43 FL
4G	68TH AVE W CCL	109+14.38, 48.33'LT	441.22
4H	68TH AVE W CCL	108+74.38, 48.33'LT	441.91

DESIGNER	XXX	DRAWN BY	XXX	CHECKED BY	XXX
NO.	REVISION COMMENTS	BY	REVIEW	DATE	



11/2/21

100% SUBMITTAL

communitytransit
Swift ORANGE LINE – CURB RAMP & TRAFFIC ISLAND PLANS
WESTERN TERMINUS-EDMONDS COLLEGE
(STATION # EB 3221 & WB 3222)

TITLE

Otak
11241 Willows Road NE, Suite 200
Redmond, WA 98052
425.822.4446
www.otak.com

32880.H
PROJECT NUMBER

C3.500
DRAWING NO.

SHEET 194 OF 622

© 2021 OTAK, INC.

5' 0' 5' 10'
SCALE IN FEET

CALL BEFORE YOU DIG 1-800-424-5555

Plotted: Nov 02, 2021 – 7:31pm K:\Project\32800\32880H\CADD\ACAD\Dwg\C3.500-C3.507.dwg Layout Name: C3.500

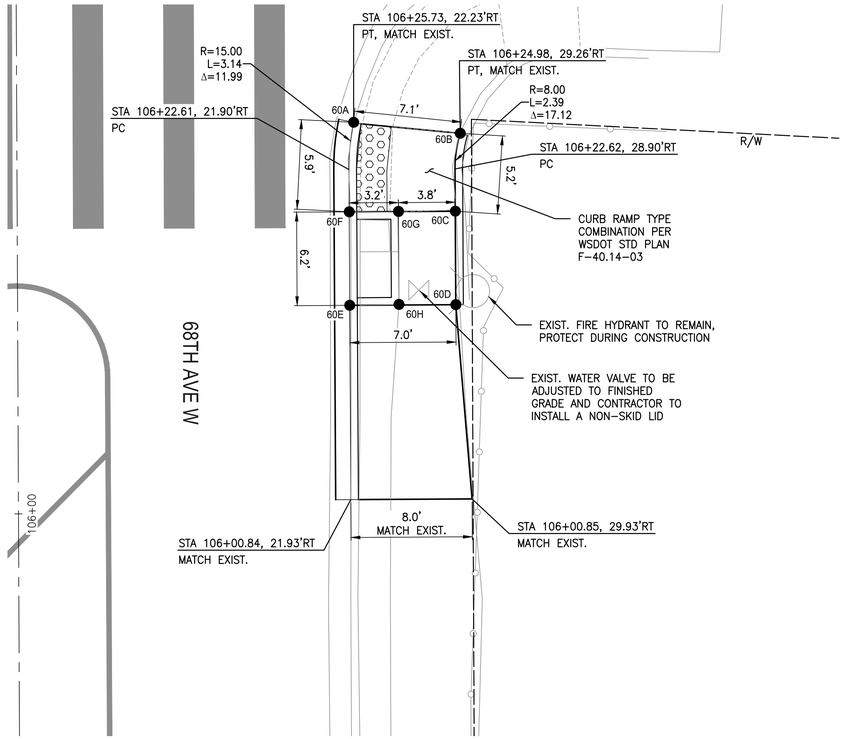

CURB RAMPS			
POINT	ALIGNMENT	STATION/OFFSET	ELEVATION
60A	68TH AVE W CCL	106+25.73, 22.23'RT	441.88 FL
60B	68TH AVE W CCL	106+24.98, 29.26'RT	441.95 FL 442.45 TOC
60C	68TH AVE W CCL	106+19.84, 28.91'RT	441.91 FL 442.41 TOC
60D	68TH AVE W CCL	106+13.67, 28.92'RT	442.31
60E	68TH AVE W CCL	106+13.66, 21.92'RT	441.76 FL 442.26 TOC
60F	68TH AVE W CCL	106+19.83, 21.91'RT	441.83 FL 442.33 TOC
60G	68TH AVE W CCL	106+19.83, 25.16'RT	441.86 FL 442.36 TOC
60H	68TH AVE W CCL	106+13.70, 25.17'RT	441.28

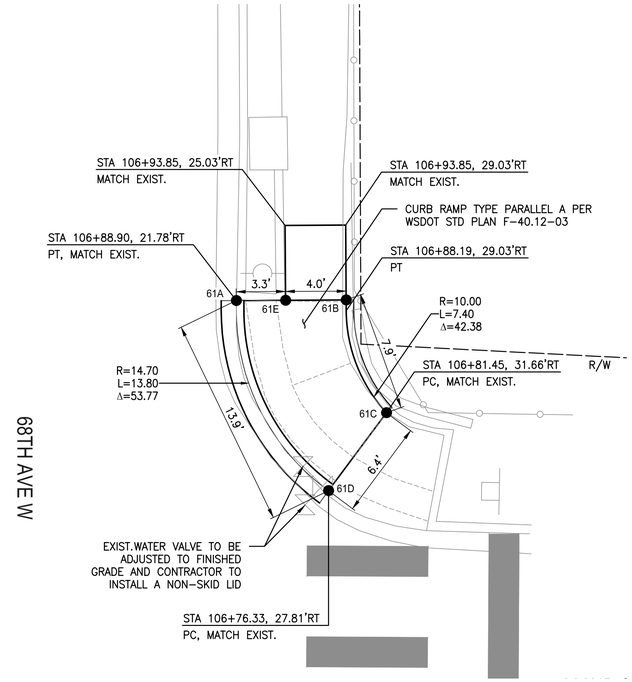

CURB RAMPS			
POINT	ALIGNMENT	STATION/OFFSET	ELEVATION
61A	68TH AVE W CCL	106+88.90, 21.78'RT	442.51 FL 443.01 TOC
61B	68TH AVE W CCL	106+88.91, 29.03'RT	443.08
61C	68TH AVE W CCL	106+81.45, 31.66'RT	442.14 FL 442.64 TOC
61D	68TH AVE W CCL	106+76.33, 27.81'RT	442.04 FL
61E	68TH AVE W CCL	106+88.90, 25.03'RT	443.04

WESTERN TERMINUS-EDMONDS COLLEGE (STATION # EB 3221 & WB 3222)

5' 0' 5' 10'
SCALE IN FEET

CALL BEFORE YOU DIG 1-800-424-5555

DESIGNER	DRAWN BY	CHECKED BY
XXX	XXX	XXX

NO.	REVISION COMMENTS	BY	REVIEW	DATE

JEDIDIAH A. SHARLEY
STATE OF WASHINGTON
40896
REGISTERED
PROFESSIONAL ENGINEER

11/4/21

100% SUBMITTAL

communitytransit
Swift ORANGE LINE

CURB RAMP & TRAFFIC ISLAND PLANS
WESTERN TERMINUS-EDMONDS COLLEGE
(STATION # EB 3221 & WB 3222)

TITLE

Otak
11241 Willows Road NE, Suite 200
Redmond, WA 98052
425.822.4446
www.otak.com

32880.H
PROJECT NUMBER

C3.501
DRAWING NO.

SHEET 195 OF 622

© 2021 OTAK, INC.

Plotted: Nov 04, 2021 - 9:27pm K:\Project\32800\32880H\CADD\ACAD\Dwg\C3.500-C3.507.dwg Layout Name: C3.501

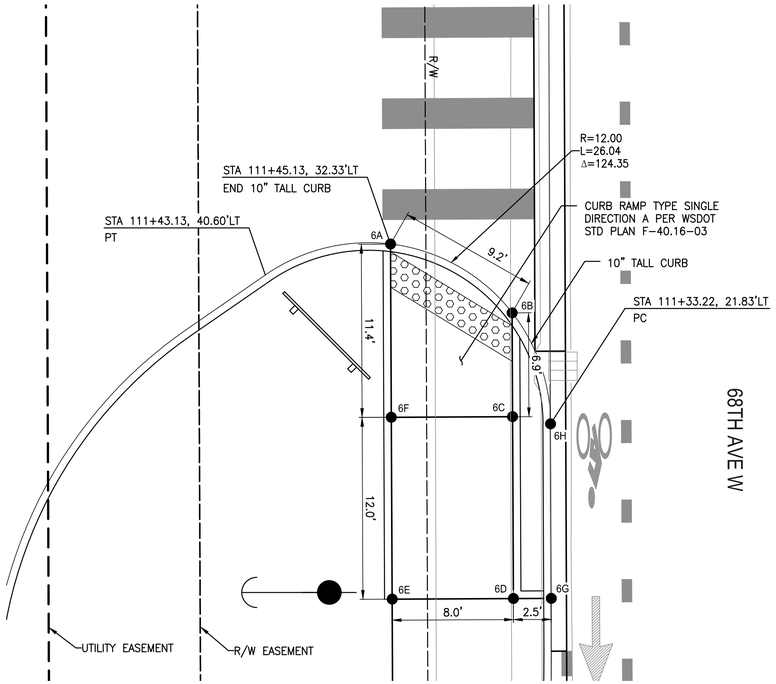

CURB RAMPS			
POINT	ALIGNMENT	STATION/OFFSET	ELEVATION
6A	68TH AVE W CCL	111+45.13, 32.33'LT	439.10 FL 439.93 TOC 10" TALL CURB
6B	68TH AVE W CCL	111+40.55, 24.33'LT	438.96 FL 439.79 TOC 10" TALL CURB
6C	68TH AVE W CCL	111+33.70, 24.33'LT	439.04 FL 439.87 TOC 10" TALL CURB
6D	68TH AVE W CCL	111+21.70, 24.33'LT	439.81
6E	68TH AVE W CCL	111+21.70, 32.33'LT	439.85
6F	68TH AVE W CCL	111+33.70, 32.33'LT	439.16 FL 439.99 TOC 10" TALL CURB
6G	68TH AVE W CCL	111+21.70, 21.83'LT	438.97 FL 439.80 TOC 10" TALL CURB
6H	68TH AVE W CCL	111+33.22, 21.83'LT	438.91 FL 439.74 TOC 10" TALL CURB

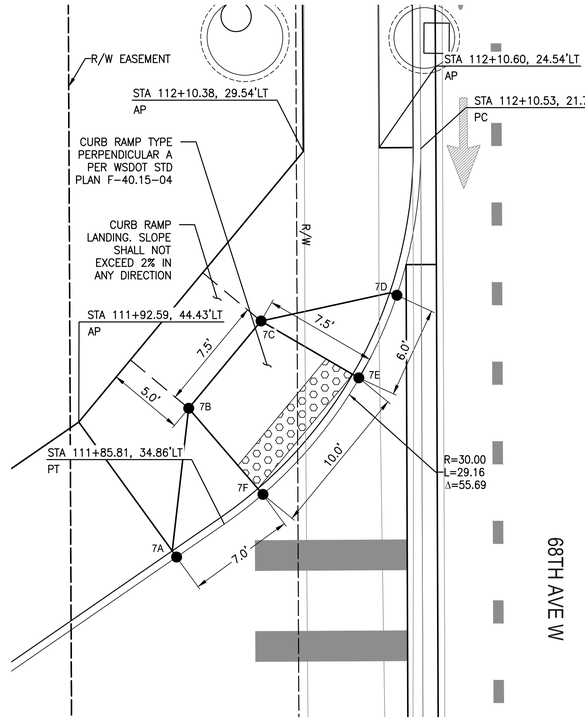

CURB RAMPS			
POINT	ALIGNMENT	STATION/OFFSET	ELEVATION
7A	68TH AVE W CCL	111+83.65, 38.02'LT	439.59 FL 440.09 TOC
7B	68TH AVE W CCL	111+93.47, 37.18'LT	440.04
7C	68TH AVE W CCL	111+99.20, 32.38'LT	439.90
7D	68TH AVE W CCL	112+00.86, 23.41'LT	439.27 FL 439.77 TOC
7E	68TH AVE W CCL	111+95.43, 25.95'LT	439.37 FL
7F	68TH AVE W CCL	111+87.76, 32.31'LT	439.50 FL

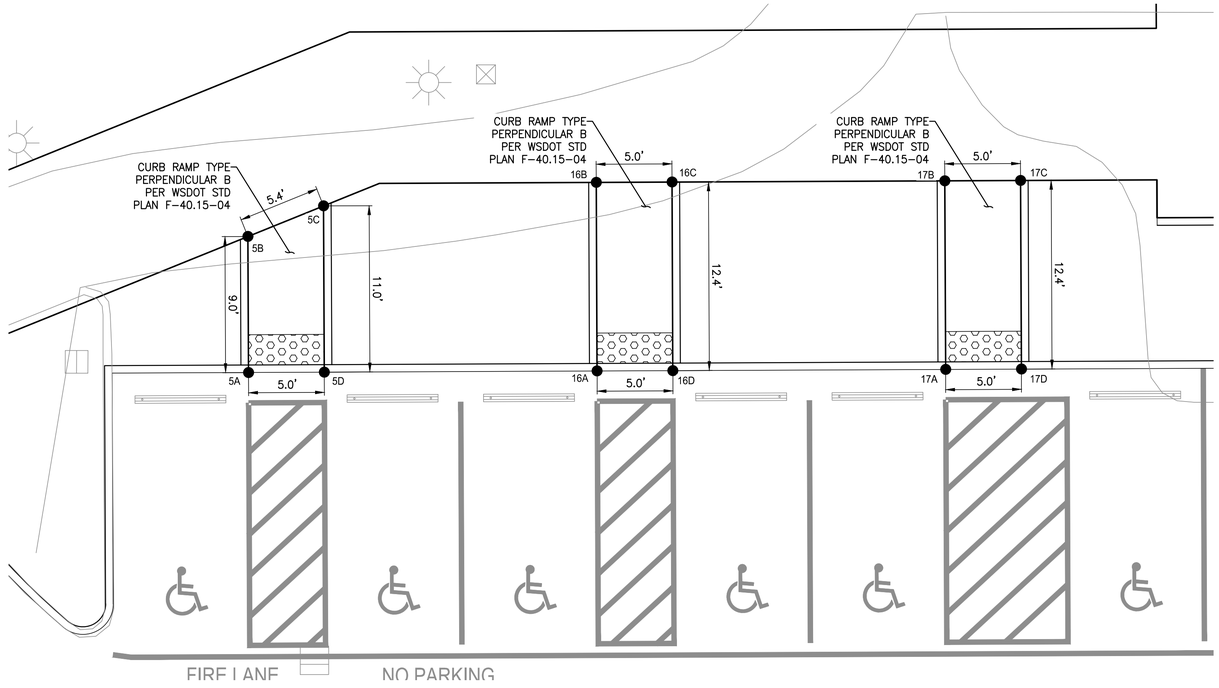

CURB RAMPS			
POINT	ALIGNMENT	STATION/OFFSET	ELEVATION
5A	68TH AVE W CCL	109+29.44, 253.83'LT	446.02 FL 446.52 TOC
5B	68TH AVE W CCL	109+38.42, 253.83'LT	446.67
5C	68TH AVE W CCL	109+40.41, 248.83'LT	446.59
5D	68TH AVE W CCL	109+29.44, 248.83'LT	445.97 FL 446.47 TOC
16A	68TH AVE W CCL	109+29.44, 230.83'LT	445.76 FL 446.26 TOC
16B	68TH AVE W CCL	109+41.88, 230.83'LT	446.32
16C	68TH AVE W CCL	109+41.88, 225.83'LT	446.24
16D	68TH AVE W CCL	109+29.44, 225.83'LT	445.71 FL 446.21 TOC
17A	68TH AVE W CCL	109+29.44, 207.83'LT	445.50 FL 446.00 TOC
17B	68TH AVE W CCL	109+41.88, 207.83'LT	445.97
17C	68TH AVE W CCL	109+41.88, 202.83'LT	445.90
17D	68TH AVE W CCL	109+29.44, 202.83'LT	445.44 FL 445.94 TOC

5' 0' 5' 10'

SCALE IN FEET

CALL BEFORE YOU DIG 1-800-424-5555

NO.	REVISION COMMENTS	BY	REVIEW	DATE
DESIGNER XXX	DRAWN BY XXX		CHECKED BY XXX	

JEDIAH SHAPLEY
STATE OF WASHINGTON
40896
REGISTERED PROFESSIONAL ENGINEER

11/2/21

communitytransit

Swift ORANGE LINE – 100% SUBMITTAL

CURB RAMP & TRAFFIC ISLAND PLANS

WESTERN TERMINUS-EDMONDS COLLEGE

(STATION # EB 3221 & WB 3222)

TITLE

Otak

11241 Willows Road NE, Suite 200
Redmond, WA 98052
425.822.4446
www.otak.com

32880.H
PROJECT NUMBER

C3.502
DRAWING NO.

SHEET 196 OF 622

© 2021 OTAK, INC.

Plotted: Nov 02, 2021 - 7:32pm K:\Project\32800\32880H\CADD\ACAD\Dwg\C3.500-C3.507.dwg Layout Name: C3.502

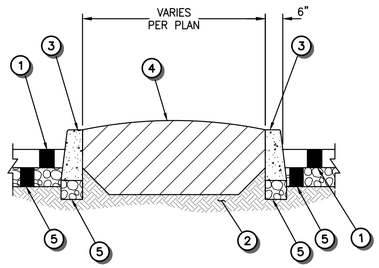

EDMONDS COLLEGE
TRAFFIC ISLANDS TYPICAL SECTION

NOT TO SCALE

SECTION NOTES

1. 6" COMPACTED DEPTH HMA, CLASS ½", PG 70–22.
2. SUBGRADE COMPACTED TO 95% OF MAXIMUM DENSITY PER ASTM D–1557. SUBGRADE TO CONSIST OF UNDISTURBED NATIVE MATERIALS OR STRUCTURAL FILL. STRUCTURAL FILL MATERIAL TO CONSIST OF SUITABLE ON–SITE MATERIALS OR GRAVEL BORROW AS DESCRIBED IN SPECIFICATIONS.
3. CEMENT CONCRETE VERTICAL CURB PER WSDOT STD PLAN F–10.12–04.
4. SEE LANDSCAPING PLANS FOR ISLAND PLANTING DETAILS.
5. 6" COMPACTED DEPTH CRUSHED SURFACING BASE COURSE.

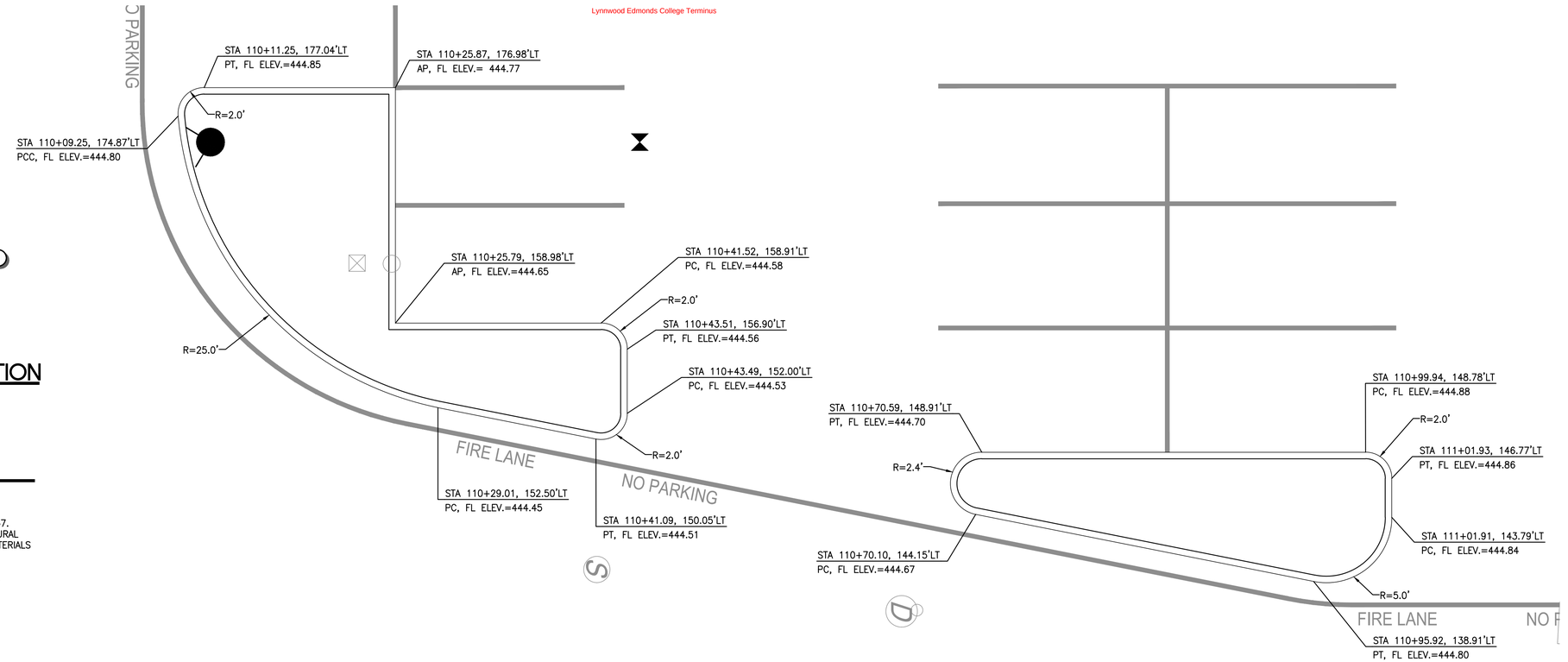

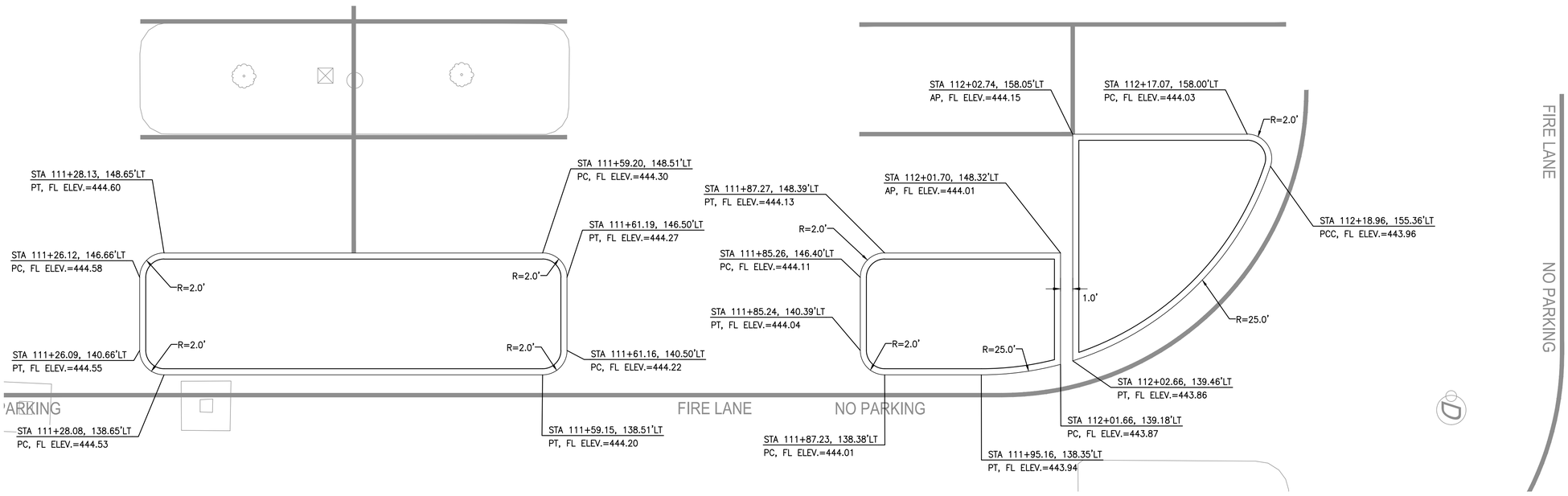

WESTERN TERMINUS-EDMONDS COLLEGE (STATION # EB 3221 & WB 3222)

NO.	REVISION COMMENTS	BY	REVIEW	DATE

DESIGNER XXX
DRAWN BY XXX
CHECKED BY XXX

JEDI A. SHAPLEY
STATE OF WASHINGTON
40896
REGISTERED
PROFESSIONAL ENGINEER

11/4/21

LU SUBMITTAL

community transit
Swift ORANGE LINE – 100% SUBMITTAL
CURB RAMP & TRAFFIC ISLAND PLANS
WESTERN TERMINUS-EDMONDS COLLEGE
(STATION # EB 3221 & WB 3222)

TITLE

Otak
11241 Willows Road NE, Suite 200
Redmond, WA 98052
425.822.4446
www.otak.com

32880.H
PROJECT NUMBER

C3.503
DRAWING NO.

SHEET 197 OF 622

© 2021 OTAK, INC.

5' 0' 5' 10'
SCALE IN FEET

CALL BEFORE YOU DIG 1–800–424–5555

Plotted: Nov 04, 2021 – 9:27pm K:\Project\32800\32880H\CADD\ACAD\Dwg\C3.500–C3.507.dwg Layout Name: C3.503

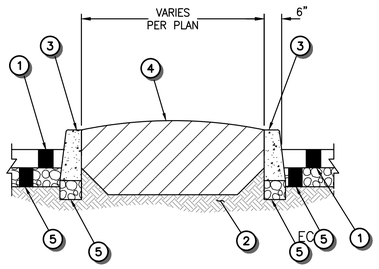

EDMONDS COLLEGE
TRAFFIC ISLANDS TYPICAL SECTION

NOT TO SCALE

SECTION NOTES

1. 6" COMPACTED DEPTH HMA, CLASS ½", PG 70–22.
2. SUBGRADE COMPACTED TO 95% OF MAXIMUM DENSITY PER ASTM D–1557. SUBGRADE TO CONSIST OF UNDISTURBED NATIVE MATERIALS OR STRUCTURAL FILL. STRUCTURAL FILL MATERIAL TO CONSIST OF SUITABLE ON–SITE MATERIALS OR GRAVEL BORROW AS DESCRIBED IN SPECIFICATIONS.
3. CEMENT CONCRETE VERTICAL CURB PER WSDOT STD PLAN F–10.12–04.
4. SEE LANDSCAPING PLANS FOR ISLAND PLANTING DETAILS.
5. 6" COMPACTED DEPTH CRUSHED SURFACING BASE COURSE.

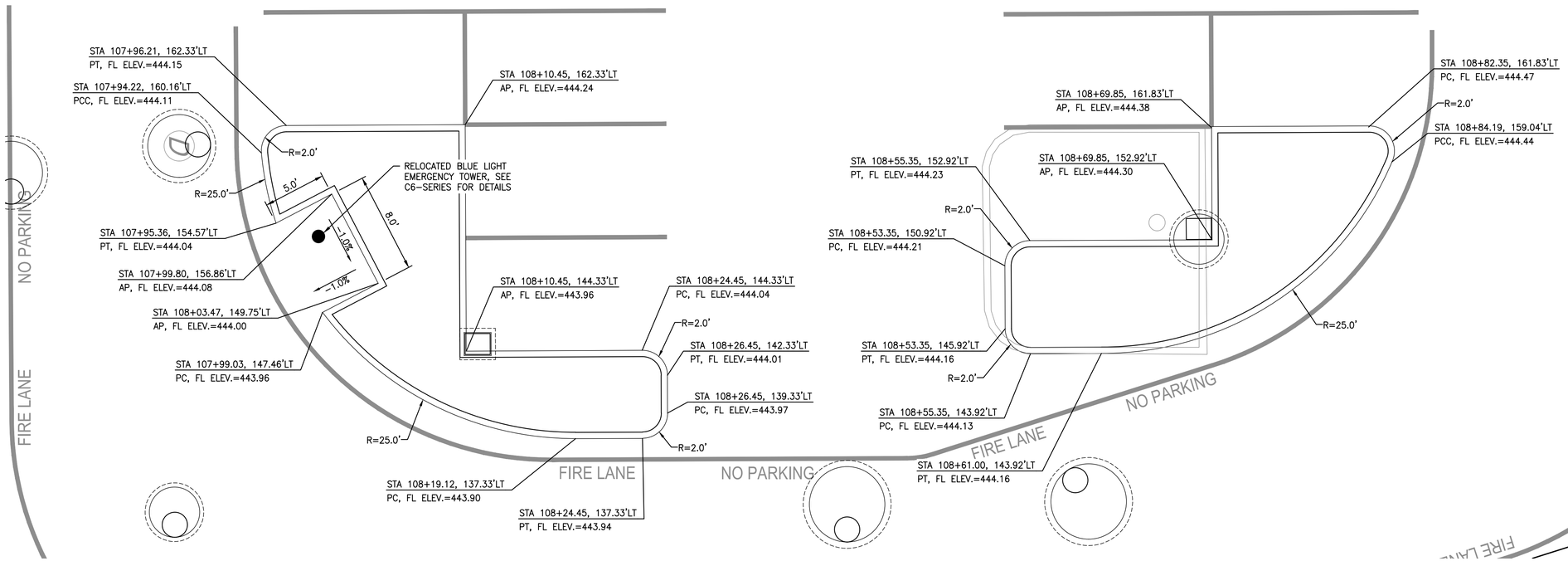

WESTERN TERMINUS-EDMONDS COLLEGE (STATION # EB 3221 & 3222)

5' 0' 5' 10'
SCALE IN FEET

CALL BEFORE YOU DIG 1–800–424–5555

DESIGNER	DRAWN BY	CHECKED BY
XXX	XXX	XXX

NO.	REVISION COMMENTS	BY	REVIEW	DATE

JEDI A. SHARPLEY
STATE OF WASHINGTON
40896
REGISTERED
PROFESSIONAL ENGINEER

11/4/21

community transit
Swift ORANGE LINE – 100% SUBMITTAL
CURB RAMP & TRAFFIC ISLAND PLANS
WESTERN TERMINUS-EDMONDS COLLEGE (STATION # EB 3221 & WB 3222)

TITLE

Otak
11241 Willows Road NE, Suite 200
Redmond, WA 98052
425.822.4446
www.otak.com

32880.H
PROJECT NUMBER

C3.504
DRAWING NO.

SHEET 198 OF 622

© 2021 OTAK, INC.

Plotted: Nov 04, 2021 – 9:28pm K:\Project\32800\32880H\CADD\ACAD\Dwg\C3.500–C3.507.dwg Layout Name: C3.504

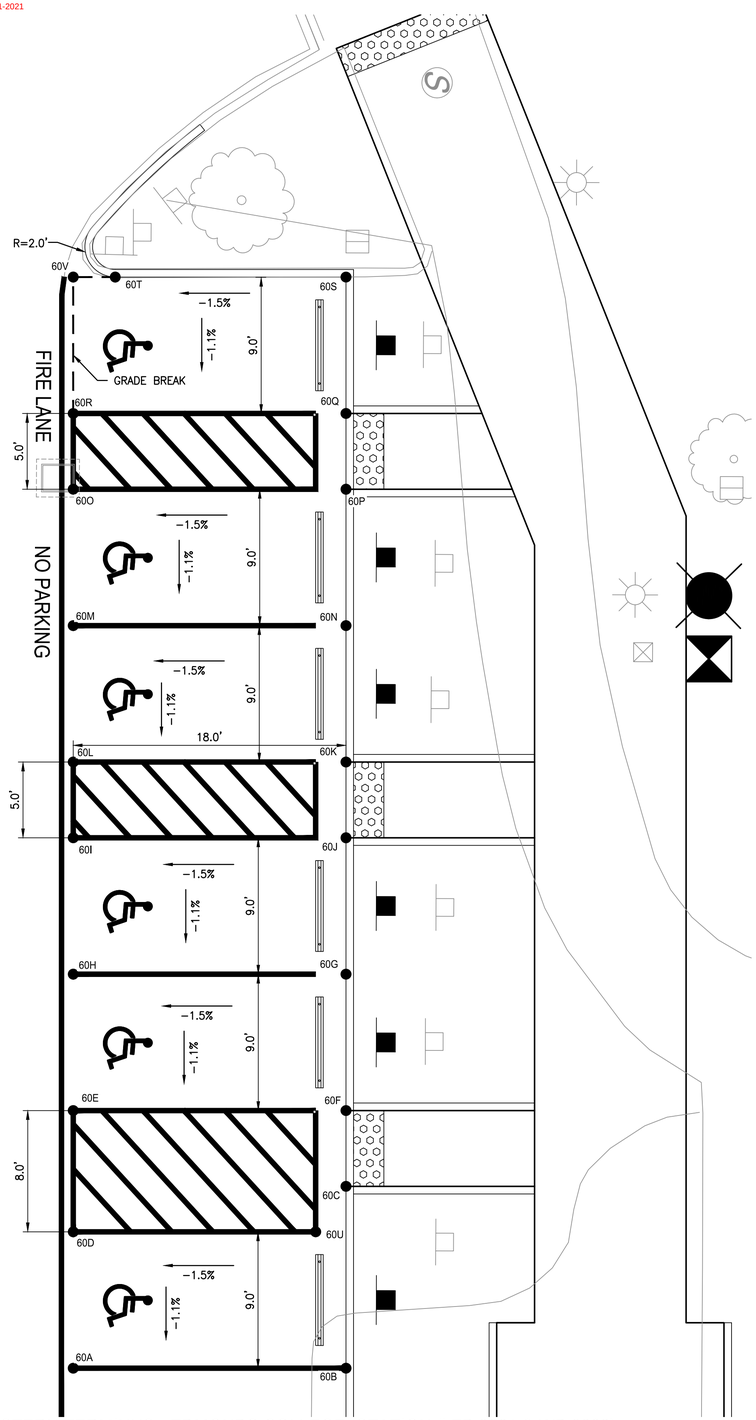

WESTERN TERMINUS - EDMONDS COLLEGE (STATION # EB 3221 & WB 3222)

ADA PARKING STALL			
POINT	ALIGNMENT	STATION/OFFSET	ELEVATION
60A	68th Ave W CCL	109+11.44, 190.83L	445.02
60B	68th Ave W CCL	109+29.44, 190.83L	445.31
60C	68th Ave W CCL	109+29.44, 202.83L	445.44
60D	68th Ave W CCL	109+11.44, 199.83L	445.14
60E	68th Ave W CCL	109+11.44, 207.83L	445.23
60F	68th Ave W CCL	109+29.44, 207.83L	445.50
60G	68th Ave W CCL	109+29.44, 216.83L	445.60
60H	68th Ave W CCL	109+11.44, 216.83L	445.34
60I	68th Ave W CCL	109+11.44, 225.83L	445.44
60J	68th Ave W CCL	109+29.44, 225.83L	445.71
60K	68th Ave W CCL	109+29.44, 230.83L	445.76
60L	68th Ave W CCL	109+11.44, 230.83L	445.50
60M	68th Ave W CCL	109+11.44, 239.83L	445.60
60N	68th Ave W CCL	109+29.44, 239.83L	445.87
60O	68th Ave W CCL	109+11.44, 248.83L	445.70
60P	68th Ave W CCL	109+29.44, 248.83L	445.97
60Q	68th Ave W CCL	109+29.44, 253.83L	446.02
60R	68th Ave W CCL	109+11.44, 253.83L	445.76
60S	68th Ave W CCL	109+29.44, 262.83L	446.13
60T	68th Ave W CCL	109+14.21, 262.83L	445.90
60U	68th Ave W CCL	109+27.44, 199.83L	445.38
60V	68th Ave W CCL	109+11.44, 262.83L	445.86



SCALE IN FEET

CALL BEFORE YOU DIG 1−800−424−5555

NO.	REVISION COMMENTS	BY	REVIEW	DATE

DESIGNER

DRAWN BY

CHECKED BY

KEVIN C. KRAXBERGER
STATE OF WASHINGTON
39870
REGISTERED
PROFESSIONAL ENGINEER

10/28/21

communitytransit

Swift ORANGE LINE – 100% SUBMITTAL

ADA PARKING STALL LAYOUTS
WESTERN TERMINUS-EDMONDS COLLEGE
(STATION # EB 3221 & WB 3222)

TITLE

Otak
11241 Willows Road NE, Suite 200
Redmond, WA 98052
425.822.4446
www.otak.com

32880 H
PROJECT NUMBER

C3.600
DRAWING NO.

SHEET 213 OF 622

© 2021 OTAK, INC.

Plotted: Oct 28, 2021 – 4:49pm C:\temp\AcPublish_8460\C3.600.dwg Layout Name: C3.600

PDR-009731-2021

A PORTION OF THE NW 1/4 SECTION 20 T. 27N., R. 4E

27042000200100

27042000206800

EDMONDS COLLEGE

PUGET SOUND POWER AND LIGHT EASEMENT

Lynnwood Edmonds College Terminus

CB401, TYPE 1
STA 106+16.90, 251.88'LT

CB400, TYPE 1
STA 106+99.01, 255.47'LT

(7) CB233, TYPE 2 – 60"
STA 107+73.56, 240.53'LT

(16) (TYP.)

(7) CB236, TYPE 2 – 60"
STA 107+62.67, 240.89'LT

36" DETENTION PIPE STUB CONNECTION TO EXIST. 60" DIA. CMP TANK PER DETAIL ON SHEET C4.409

(2) (7) CB224, EXIST, TYPE 2
STA 107+03.89, 211.57'LT

60" DETENTION PIPE PER DETAILS ON SHEET C4.407

36" DETENTION PIPE PER DETAILS ON SHEET C4.407

CB250, TYPE 2 – 72" CONTROL STRUCTURE
(15) STA 108+59.93, 132.15'LT

TEMPORARY CONSTRUCTION EASEMENT

CB231, TYPE 2 – 60" CONTROL STRUCTURE
STA 107+87.67, 160.74'LT (1) (15)

(7) CB225, TYPE 2 – 60"
STA 107+19.87, 201.31'L
RIM=446.30
IE=431.95 (36" SD E OUT)

(7) CB234, TYPE 2 – 60"
STA 107+63.42, 158.66'LT

58LF 12" SD
S=1.12%

CB240, MH TYPE 3 – 72" RELOCATED STORMWATER TREATMENT MANHOLE
(6) STA 108+40.71, 132.01'LT

(6) EMERGENCY CALL BOX FROM STA 111+43.66
104.66'LT

(1) (2) (7) CB403, EXIST. TYPE 1
STA 106+80.27, 176.12'LT

36" DETENTION PIPE PER DETAILS ON SHEET C4.407

66LF 36" SD
S=0.00%

(1) (2) (7) CB402, EXIST. TYPE 1
STA 106+35.06, 175.79'LT

CB222, TYPE 2 –72" CONTROL STRUCTURE
(15) STA 107+19.78, 135.60'LT

CB254, TYPE 1
STA 108+11.36
144.89'L
RIM=443.97
IE=439.15
(12" SD N OUT)
(17)

(7) CB220, TYPE 2 – 48"
STA 107+19.57, 126.49'LT

36" DETENTION PIPE PER DETAILS ON SHEET C4.407

(7) CB232, TYPE 2 – 60"
STA 107+74.29, 158.68'LT

(1) (2) (7) CB223, EXIST. TYPE 2
STA 106+85.79, 136.02'LT

(7) CB230, TYPE 2 – 48"
STA 107+87.17, 131.63'LT

(7) CB210, TYPE 2 – 48"
STA 106+42.86, 127.04'LT

(7) CB120, TYPE 1
STA 106+79.30, 47.49'L
RIM=443.68
IE=438.72 (12" SD N OUT)
IE=438.72 (12" SD E IN)

23LF 12" SD
S=3.28%

(22)

(11)

(27) STA 106+41.82, 38.69'LT
BEGIN

72LF 12" SD
S=0.55%

23LF 12" SD
S=1.55%

(1) (7) CB202, TYPE 2 – 48"
STA 106+17.88, 43.73'L
RIM=443.25
IE=435.30 (12" SD SE OUT)
IE=440.75 (6" SD, WALL DRAIN NW IN)

(5) SNOCO PUD POWER POLE

CB258, TYPE 1
STA 107+74.21, 113.41'L
RIM=443.35
IE=439.00 (12" SD N OUT)

CB256, TYPE 1
STA 108+46.31, 113.42'L
RIM=443.78
IE=438.60 (12" SD NW OUT)
IE=438.60 (12" SD S IN)

CB252, TYPE 2 – 48"
STA 108+68.80, 152.97'L
RIM=444.28
IE=438.50 (12" SD SE OUT)
IE=438.50 (12" SD S IN)

24LF 12" SD
S=7.50%

36LF 12" SD
S=2.66%

8LF 12" SD
S=0.97%

TEMPORARY CONSTRUCTION EASEMENT

UTILITY EASEMENT

R/W EASEMENT

PH #68A COM DUCT

PH #68 TO COM

44LF 12" SD
S=0.51%

60LF 12" SD
S=0.50%

R/W

CONSTRUCTION GRIDLINE

68TH AVE W

104+00 105+00 106+00 107+00 108+00

(1) CB201, TYPE 2 – 48"
STA 106+07.98, 21.86'L
RIM=441.82
IE=433.50 (18" SD N OUT)
IE=433.50 (12" SD NW IN)

PH #66 NO UTILITY

PH #66 COM DUCT

(27) STA 106+76.89, 38.51'LT
END

(18)

10LF 12" DI
S=0.52%

(TYP.) (16) (3) (8)

(1) (7) CB200, TYPE 2 – 54"
STA 106+41.75, 21.03'LT

(7) CB130, CONC. INLET
STA 106+78.31, 39.26'L
RIM=443.53
IE=438.80 (12" SD W OUT)

SNOCO PUD POWER POLE (5)

CB (2) (7)

CB145, TYPE 2 – 48"
STA 108+13.86, 59.10'LT

WV (2)

WV (3) (2)

(11) (11)

CB110, TYPE 2 – 54" CONTROL STRUCTURE
(15) STA 106+97.08, 43.30'LT

(2) COMM. MH

CB135, TYPE 1
STA 107+60.99, 32.75'L
RIM=442.68
IE=437.85 (12" DI W OUT)

CB152, TYPE 1
STA 108+74.30, 59.91'LT

CB100, TYPE 2 – 48"
STA 106+89.86, 19.95'LT (1)

CB155, TYPE 1
STA 108+74.41, 32.75'L
RIM=441.52
IE=440.50 (12" DI W OUT)

202ND ST SW

00515400000905

MATCHLINE SEE SHEET C4.301

CONSTRUCTION NOTES

1. CONNECT TO EXISTING DRAINAGE STRUCTURE.
2. ADJUST EXISTING UTILITY TO FINISH GRADE.
3. CONNECT STORM DRAINAGE TO STUB AT STATION COLUMN. SEE SHEET C4.400 FOR DETAILS.
4. INSTALL TYPE 1 UTILITY JUNCTION BOX PER WSDOT STD PLAN J–40.10–04.
5. EXISTING UTILITY TO BE RELOCATED BY OTHERS.
6. RELOCATE EXISTING UTILITY.
7. INSTALL SOLID LOCKING LID PER WSDOT STD PLAN B–30.20–04.
8. OUTLET 3" STORM DRAIN PIPE THROUGH CURB PER DETAIL ON SHEET C4.400.
9. INSTALL 2" CONDUIT FOR FUTURE COMMUNICATION CONNECTION. TERMINATE CONDUIT AT EMPTY TYPE 1 UTILITY JUNCTION BOX ADJACENT TO PLATFORM. SEE SHEET C4.400 FOR UTILITY TRENCH DETAILS.
10. INSTALL CONDUIT TO WITHIN 2' OF EXISTING PUD ELECTRIC JUNCTION BOX WITH 5' OF CABLE COILED. PUD TO COMPLETE CONDUIT INTO JUNCTION BOX, COMPLETE THE CONNECTION AND ENERGIZE THE CIRCUIT.
11. SEE SIGNAL AND ILLUMINATION PLANS FOR PROPOSED IMPROVEMENTS.
12. INSTALL 2" CONDUIT WITH 3#6 CONDUCTORS. SEE SHEET C4.400 FOR UTILITY TRENCH DETAILS.
13. INSTALL 3" CONDUIT FOR COMMUNICATION CONNECTION. SEE SHEET C4.400 FOR UTILITY TRENCH DETAILS.
14. INSTALL SCUPPER/DRAINAGE CURB CUT, SEE SHEETS C4.411–C4.412 FOR DETAILS.
15. INSTALL CONTROL STRUCTURE, SEE SHEETS C4.409–C4.410 & C4.427 FOR DETAILS.
16. PAVEMENT RESTORATION LIMITS, SEE C3 SERIES FOR DETAILS.
17. REMOVE AND RELOCATE EXISTING PEDESTRIAN SCALE OR PARKING LOT LIGHT. SEE TS SHEETS.
18. INSTALL STORMWATER TREATMENT FACILITY, SEE DETAILS ON SHEETS C4.408 & C4.422–C4.423.
19. INSTALL DRAINAGE SWALE PER SHEETS C4.412 & C4.427.
20. REMOVE AND RELOCATE HYDRANT AND VALVE PER CITY OF LYNNWOOD DETAIL 5–07.
21. MEDIA FILTER DRAIN PER DETAIL ON SHEET C4.427.
22. INSTALL DETENTION VAULT, SEE SHEET C4.405–C4.406 FOR DETAILS.
23. RELOCATE EXISTING WATER MAIN PER DETAIL ON SHEET C4.603
24. INSTALL OUTLET PROTECTION, SEE SHEET C4.427.
25. CLEAN & VACTOR EXISTING DRAINAGE STRUCTURE.
26. INSTALL CONCRETE RUNNEL, SEE SHEET C4.412.
27. INSTALL GRATED TRENCH DRAIN PER DETAIL ON SHEET C4.411.
28. INSTALL ELECTRICAL PUD METERING UNIT.
29. INSTALL 3" CONDUIT WITH 3#6 CONDUCTORS (STATION SERVICE), AND 4–2/0 CONDUCTORS (RESTROOM SERVICE). SEE SHEET C4.400 FOR UTILITY TRENCH DETAILS.
30. INSTALL 2" WATER SERVICE CONNECTION.
31. INSTALL SANITARY SEWER CLEAN OUT.
32. INSTALL 6" SANITARY SEWER SERVICE.
33. INSTALL 12" SANITARY SEWER MAIN PER SLWSD DETAIL VI–S1.
34. INSTALL SANITARY SEWER MANHOLE.
35. INSTALL DEBRIS BARRIER, SEE SHEET C4.411.
36. INSTALL 2" CONDUIT WITH 4#2 CONDUCTORS FOR OFFGASSING POWER SERVICE.
37. INSTALL BACKFLOW ASSEMBLY PER SLWSD DETAIL VI–W19.
38. INSTALL 1–1/2" IRRIGATION WATER SERVICE CONNECTION PER CITY OF LYNNWOOD STD PLAN 5–02.

GENERAL NOTES

1. ALL PROPOSED STORM & SEWER PIPE SLOPES, TYPES & STRUCTURES NOT CALLED OUT IN C4.3 SERIES ARE SHOWN IN PROFILE VIEW ON C4.5 & C4.6 SERIES PLANS.

LEGEND

- EXISTING R/W
- R/W EASEMENT
- PROPERTY LINE
- PERMANENT EASEMENT
- UTILITY EASEMENT
- TCE — TEMPORARY CONSTRUCTION EASEMENT
- P — POWER
- T — COMMUNICATION
- W — WATER
- OG — OFFGASSING LINE
- GEO_XX — EXPLORATION POINT (SEE GEOTECHNICAL REPORT FOR DATA)
- DRAINAGE SWALE
- UD — UNDERDRAIN
- RETAINING WALL

20 0 20 40
SCALE IN FEET

CALL BEFORE YOU DIG 1–800–424–5555

NO.	REVISION COMMENTS	BY	REVIEW	DATE

DESIGNER | DRAWN BY | CHECKED BY

KEVIN C. KRAXBERGER — STATE OF WASHINGTON — 39870 — REGISTERED PROFESSIONAL ENGINEER

10/22/21

1st Submittal, April 3/22/2022

100% SUBMITTAL

communitytransit

Swift ORANGE LINE – 100% SUBMITTAL
TERMINI UTILITY PLANS
WESTERN TERMINUS-EDMONDS COLLEGE
(STATION # EB 3221 & WB 3222)

TITLE

Otak
11241 Willows Road NE, Suite 200
Redmond, WA 98052
425.822.4446
www.otak.com

32880.H
PROJECT NUMBER

C4.300
DRAWING NO.

SHEET 251 OF 622

© 2021 OTAK, INC.

Plotted: Oct 22, 2021 – 5:31pm K:\Project\32800\32880H\CADD\ACAD\Dwg\C4.300–C4.307.dwg Layout Name: C4.300

PDR-009731-2021

A PORTION OF THE NW 1/4 SECTION 20 T. 27N., R. 4E

Lynnwood Extension College Terminus

EDMONDS COLLEGE

27042000206800

MATCHLINE SEE SHEET C4.300

CO620, CONNECT TO RESTROOM PER COL STD. PLAN 6-03 (31)
STA 109+99.74, 107.03'L
RIM=434.84
IE=434.27 (6" PVC N OUT)

CB350, CONC. INLET (1)
STA 110+23.13, 129.29'LT

(30) CITY OF LYNNWOOD STD. PLAN 5-02

CO610, CO PER COL STD. PLAN 6-03 (31)
STA 110+40.05, 106.85'L
RIM=434.43
IE=433.19 (12" EXIST. SS W OUT)
IE=433.50 (6" PVC S IN)
IE=433.19 (12" EXIST. SS E IN)

CB360, CONC. INLET
STA 109+85.59, 136.91'LT

CB260, TYPE 2 - 60" (1) (7)
STA 109+11.61, 137.10'LT

CB340, TYPE 2 - 48" (1) (7)
STA 110+68.46, 122.77'LT

CB333, EXIST. TYPE 2 (1) (2) (7)
STA 111+24.94, 116.89'LT

TEMPORARY CONSTRUCTION EASEMENT

36" DETENTION PIPE PER DETAILS ON SHEET C4.407

(2) SSMH

CITY OF LYNNWOOD STD. PLAN 5-02

(6) EMERGENCY CALL BOX TO STA 107+98.73, 153.49'LT

(16) (TYP.)

(2) CB (X2)

(2) CB & MODULAR WETLAND

(2) CB

4' AWWD EASEMENT

40LF 6" PVC S=1.91%

(6) 115 LF OF 4-INCH STW PSE GAS MAIN. SEE SPECIFICATIONS.

CB330, TYPE 2 - 54"
STA 111+31.23, 87.12'LT

CB325, TYPE 1
STA 111+78.19, 82.34'LT

(6) RELOCATE STORMWATER TREATMENT MANHOLE

J-BOX TO BE INSTALLED BY SNOCO PUD

DRAINAGE CURB CUT 2, (14)
STA 110+51.18, 58.83'LT

DRAINAGE CURB CUT 1, (14)
STA 111+08.51, 58.82'L

(6) EXISTING 8-IN WATER MAIN SEE SHEET C4.603

CB320, TYPE 2 - 60" (7)
STA 111+82.28, 66.89'LT

36" DETENTION PIPE PER DETAILS ON SHEET C4.407

(11) (TYP.)

UTILITY EASEMENT

R/W EASEMENT

CB310, TYPE 2 - 60" CONTROL STRUCTURE (7) (15)
STA 112+17.92, 33.36'LT

CB300, TYPE 2 - 48" (1)
STA 112+17.82, 21.53'LT

ZIPLY UTILITY POLE (5)

(5) COMCAST COMM CONDUIT

(2) GAS VALVE

(5) ZIPLY COMM. J-BOX

(5) SNOCO PUD POWER POLE

(5) COMCAST COMM PEDESTAL

(5) COMCAST COMM. J-BOX

(16) (TYP.)

(5) ZIPLY UTILITY POLE

CB328, EXIST. TYPE 2 (1)
STA 111+37.02, 20.99'LT

(5) WATER SERVICE, METER, & VALVE PER CITY OF LYNNWOOD STD. PLAN 5-01

CONSTRUCTION GRIDLINE

68TH AVE W

200TH ST SW

201ST PL SW

S1, SCUPPER (14)
STA 110+33.44, 33.83'L
RIM=440.00
IE=439.50 (4" W IN)

109+00 110+00 111+00 112+00 113+00

R/W

CONSTRUCTION NOTES

1. CONNECT TO EXISTING DRAINAGE STRUCTURE.
2. ADJUST EXISTING UTILITY TO FINISH GRADE.
3. CONNECT STORM DRAINAGE TO STUB AT STATION COLUMN. SEE SHEET C4.400 FOR DETAILS.
4. INSTALL TYPE 1 UTILITY JUNCTION BOX PER WSDOT STD PLAN J-40.10-04.
5. EXISTING UTILITY TO BE RELOCATED BY OTHERS.
6. RELOCATE EXISTING UTILITY.
7. INSTALL SOLID LOCKING LID PER WSDOT STD PLAN B-30.20-04.
8. OUTLET 3" STORM DRAIN PIPE THROUGH CURB PER DETAIL ON SHEET C4.400.
9. INSTALL 2" CONDUIT FOR FUTURE COMMUNICATION CONNECTION. TERMINATE CONDUIT AT EMPTY TYPE 1 UTILITY JUNCTION BOX ADJACENT TO PLATFORM. SEE SHEET C4.400 FOR UTILITY TRENCH DETAILS.
10. INSTALL CONDUIT TO WITHIN 2' OF EXISTING PUD ELECTRIC JUNCTION BOX WITH 5' OF CABLE COILED. PUD TO COMPLETE CONDUIT INTO JUNCTION BOX, COMPLETE THE CONNECTION AND ENERGIZE THE CIRCUIT.
11. SEE SIGNAL AND ILLUMINATION PLANS FOR PROPOSED IMPROVEMENTS.
12. INSTALL 2" CONDUIT WITH 3#6 CONDUCTORS. SEE SHEET C4.400 FOR UTILITY TRENCH DETAILS.
13. INSTALL 3" CONDUIT FOR COMMUNICATION CONNECTION. SEE SHEET C4.400 FOR UTILITY TRENCH DETAILS.
14. INSTALL SCUPPER/DRAINAGE CURB CUT, SEE SHEETS C4.411-C4.412 FOR DETAILS.
15. INSTALL CONTROL STRUCTURE, SEE SHEETS C4.409-C4.410 & C4.427 FOR DETAILS.
16. PAVEMENT RESTORATION LIMITS, SEE C3 SERIES FOR DETAILS.
17. REMOVE AND RELOCATE EXISTING PEDESTRIAN SCALE OR PARKING LOT LIGHT. SEE TS SHEETS.
18. INSTALL STORMWATER TREATMENT FACILITY, SEE DETAILS ON SHEETS C4.408 & C4.422-C4.423.
19. INSTALL DRAINAGE SWALE PER SHEETS C4.412 & C4.427.
20. REMOVE AND RELOCATE HYDRANT AND VALVE PER CITY OF LYNNWOOD DETAIL 5-07.
21. MEDIA FILTER DRAIN PER DETAIL ON SHEET C4.427.
22. INSTALL DETENTION VAULT, SEE SHEET C4.405-C4.406 FOR DETAILS.
23. RELOCATE EXISTING WATER MAIN PER DETAIL ON SHEET C4.603
24. INSTALL OUTLET PROTECTION, SEE SHEET C4.427.
25. CLEAN & VACTOR EXISTING DRAINAGE STRUCTURE.
26. INSTALL CONCRETE RUNNEL, SEE SHEET C4.412.
27. INSTALL GRATED TRENCH DRAIN PER DETAIL ON SHEET C4.411.
28. INSTALL ELECTRICAL PUD METERING UNIT.
29. INSTALL 3" CONDUIT WITH 3#6 CONDUCTORS (STATION SERVICE), AND 4-2/0 CONDUCTORS (RESTROOM SERVICE). SEE SHEET C4.400 FOR UTILITY TRENCH DETAILS.
30. INSTALL 2" WATER SERVICE CONNECTION.
31. INSTALL SANITARY SEWER CLEAN OUT.
32. INSTALL 6" SANITARY SEWER SERVICE.
33. INSTALL 12" SANITARY SEWER MAIN PER SLWSD DETAIL VI-S1.
34. INSTALL SANITARY SEWER MANHOLE.
35. INSTALL DEBRIS BARRIER, SEE SHEET C4.411.
36. INSTALL 2" CONDUIT WITH 4#2 CONDUCTORS FOR OFFGASSING POWER SERVICE.
37. INSTALL BACKFLOW ASSEMBLY PER SLWSD DETAIL VI-W19.
38. INSTALL 1-1/2" IRRIGATION WATER SERVICE CONNECTION PER CITY OF LYNNWOOD STD PLAN 5-02.

GENERAL NOTES

1. ALL PROPOSED STORM & SEWER PIPE SLOPES, TYPES & STRUCTURE IES NOT CALLED OUT IN C4.3 SERIES ARE SHOWN IN PROFILE VIEW ON C4.5 & C4.6 SERIES PLANS.

LEGEND

- EXISTING R/W
- R/W EASEMENT
- PROPERTY LINE
- PERMANENT EASEMENT
- UTILITY EASEMENT
- TCE — TEMPORARY CONSTRUCTION EASEMENT
- P — POWER
- T — COMMUNICATION
- W — WATER
- OG — OFFGASSING LINE
- GEO_XX — EXPLORATION POINT (SEE GEOTECHNICAL REPORT FOR DATA)
- DRAINAGE SWALE
- UD — UNDERDRAIN
- RETAINING WALL

20 0 20 40
SCALE IN FEET

CALL BEFORE YOU DIG 1-800-424-5555

NO.	REVISION COMMENTS	BY	REVIEW	DATE

DESIGNER | DRAWN BY | CHECKED BY

1st Submittal, Rev 3/22/2022

KEVIN C. KRAXBERGER — STATE OF WASHINGTON — 39870 — REGISTERED PROFESSIONAL ENGINEER

11/2/21

communitytransit

Swift ORANGE LINE - 100% SUBMITTAL

TERMINI UTILITY PLANS
WESTERN TERMINUS-EDMONDS COLLEGE
(STATION # EB 3221 & WB 3222)

TITLE

Otak
11241 Willows Road NE, Suite 200
Redmond, WA 98052
425.822.4446
www.otak.com

32880.H
PROJECT NUMBER

C4.301
DRAWING NO.

SHEET 252 OF 622

© 2021 OTAK, INC.

Plotted: Nov 03, 2021 - 9:06am K:\Project\32800\32880H\CADD\ACAD\Dwg\C4.300-C4.307.dwg Layout Name: C4.301

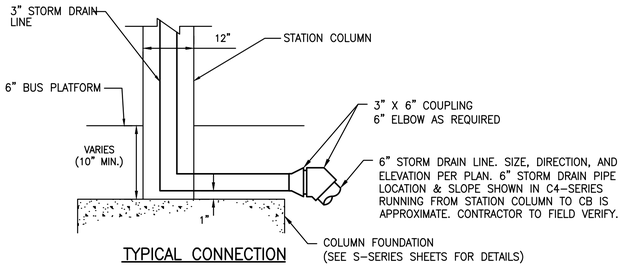

TYPICAL CONNECTION

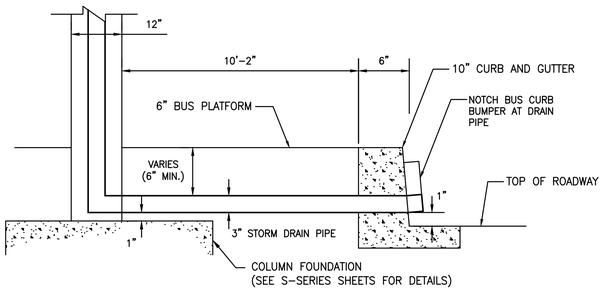

OUTLET THROUGH CURB CONNECTION*
*WHERE SHOWN ON C4 SERIES

STORM DRAIN CONNECTIONS AT STATION COLUMN

NOT TO SCALE

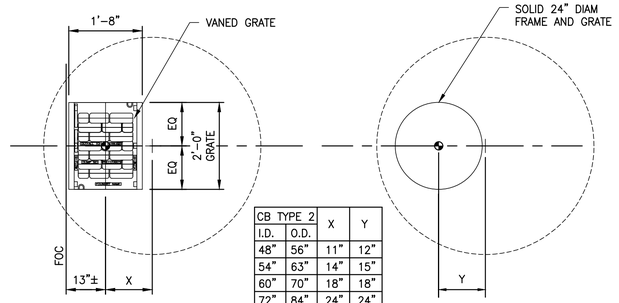

CB TYPE 2		X	Y
I.D.	O.D.		
48"	56"	11"	12"
54"	63"	14"	15"
60"	70"	18"	18"
72"	84"	24"	24"
84"	100"	30"	30"
96"	112"	37"	37"
120"	140"	49"	49"
144"	168"	61"	61"

TYPE 2

KEY

- CENTER OF GRATE
- CENTER OF STRUCTURE

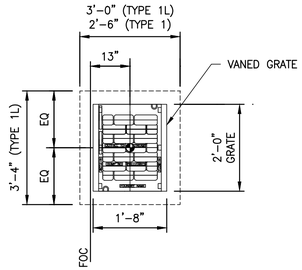

TYPE 1 & TYPE 1L

NOTES:
1. CENTER OF GRATE = CENTER OF STRUCTURE FOR TYPE 1 AND TYPE 1L STRUCTURES ONLY.
2. SPECIFIED NORTHING AND EASTING OR STATION AND OFFSET REFERENCE CENTER OF STRUCTURE FOR ALL DRAINAGE FACILITIES, UNLESS NOTED OTHERWISE.
3. RIM ELEVATION AND STATION/OFFSET OR NORTHING/EASTING REFERENCES ARE TO CENTER OF STRUCTURE.

NOTES:
1. CENTER OF GRATE = CENTER OF STRUCTURE FOR TYPE 1 AND TYPE 1L STRUCTURES ONLY.
2. SPECIFIED NORTHING AND EASTING REFERENCE CENTER OF STRUCTURE FOR ALL DRAINAGE FACILITIES UNLESS OTHERWISE NOTED ON PLANS.

TYPICAL STRUCTURE PLACEMENT DETAIL

NOT TO SCALE

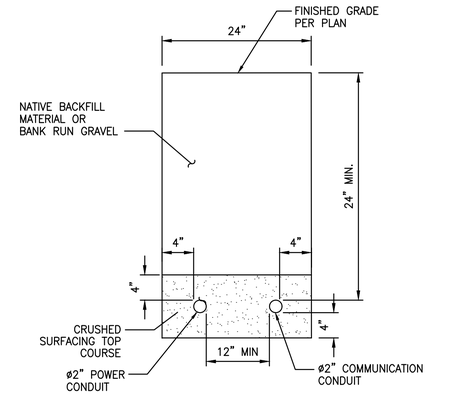

UTILITY TRENCH DETAIL

NOT TO SCALE

NOTE: UTILITY TRENCH MAY BE ADJUSTED TO AVOID CONFLICTS AS APPROVED.

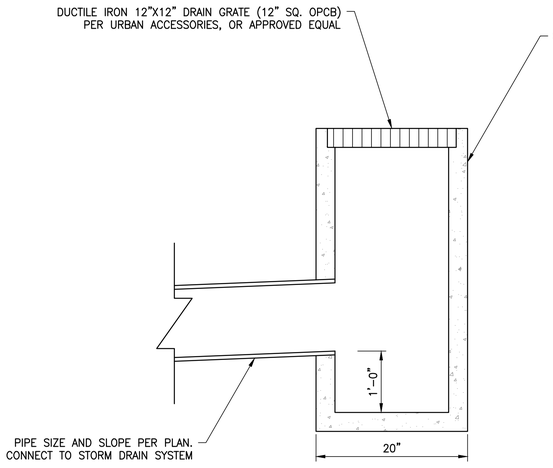

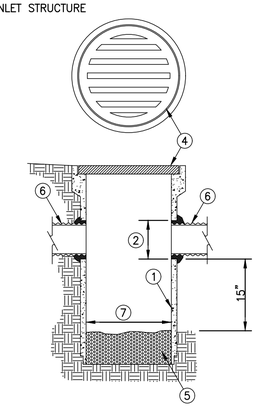

DETAIL NOTES

1. AREA DRAINS TO BE CONSTRUCTED FROM CONCRETE PIPE, IN ACCORDANCE WITH ASTM C14 OR APPROVED EQUAL.
2. CUTOUT HOLE SIZE EQUAL TO OUTLET PIPE OUTSIDE DIAMETER PLUS YARD DRAIN WALL THICKNESS.
3. CONNECTION TO OUTLET PIPE TO BE MORTARED AND MADE FLUSH WITH INSIDE OF THE YARD DRAIN WALL.
4. CAST IRON BELL GRATE. FITS INTO BELL RECESS AND EXTENDS FLUSH WITH FACE OF BELL. THE GRATE SHALL BE ADA COMPLIANCE AND SHALL HAVE SLOTS (HOLES) THAT CONSTITUTE 50 PERCENT OPEN AREA FOR DRAINAGE. INLET BELL SURFACE SHALL BE FINISHED TO ASSURE NON-ROCKING FIT WITH ANY COVER.
5. FILL BOTTOM WITH CONCRETE 4 INCHES MIN.
6. CONVEYANCE PIPE, SIZE PER PLANS
7. 12" DIAM FOR 8" OR SMALLER CONVEYANCE PIPES, 18" DIAM FOR 10" TO 12" CONVEYANCE PIPES.

AREA DRAIN

NOT TO SCALE

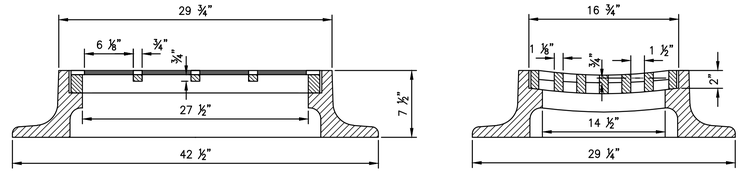

NOTE:
1. SHALL MEET WSDOT STANDARD SPECIFICATIONS SECTION 9-05.15 AND 9-05.15(2).

VALLEY GRATE DETAIL

NOT TO SCALE

CALL BEFORE YOU DIG 1-800-424-5555

NO.	REVISION COMMENTS	BY	REVIEW	DATE

DESIGNER | DRAWN BY | CHECKED BY

JODI A. SHARLEY — STATE OF WASHINGTON — 40896 — REGISTERED PROFESSIONAL ENGINEER

10/14/21

100% SUBMITTAL

community transit
Swift ORANGE LINE – 100% SUBMITTAL
STORM DRAINAGE DETAILS

TITLE

Otak
11241 Willows Road NE, Suite 200
Redmond, WA 98052
425.822.4446
www.otak.com

32880 H
PROJECT NUMBER

C4.400
DRAWING NO.

SHEET 259 OF 622

© 2021 OTAK, INC.

Plotted: Oct 14, 2021 - 11:54am K:\Project\32800\32880H\CADD\ACAD\Dwg\C4.400-C4.403.dwg Layout Name: C4.400

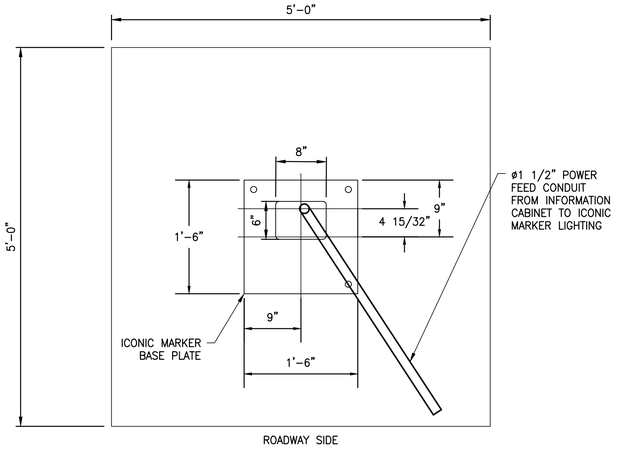

TERMINI ICONIC MARKER CONDUIT PLAN

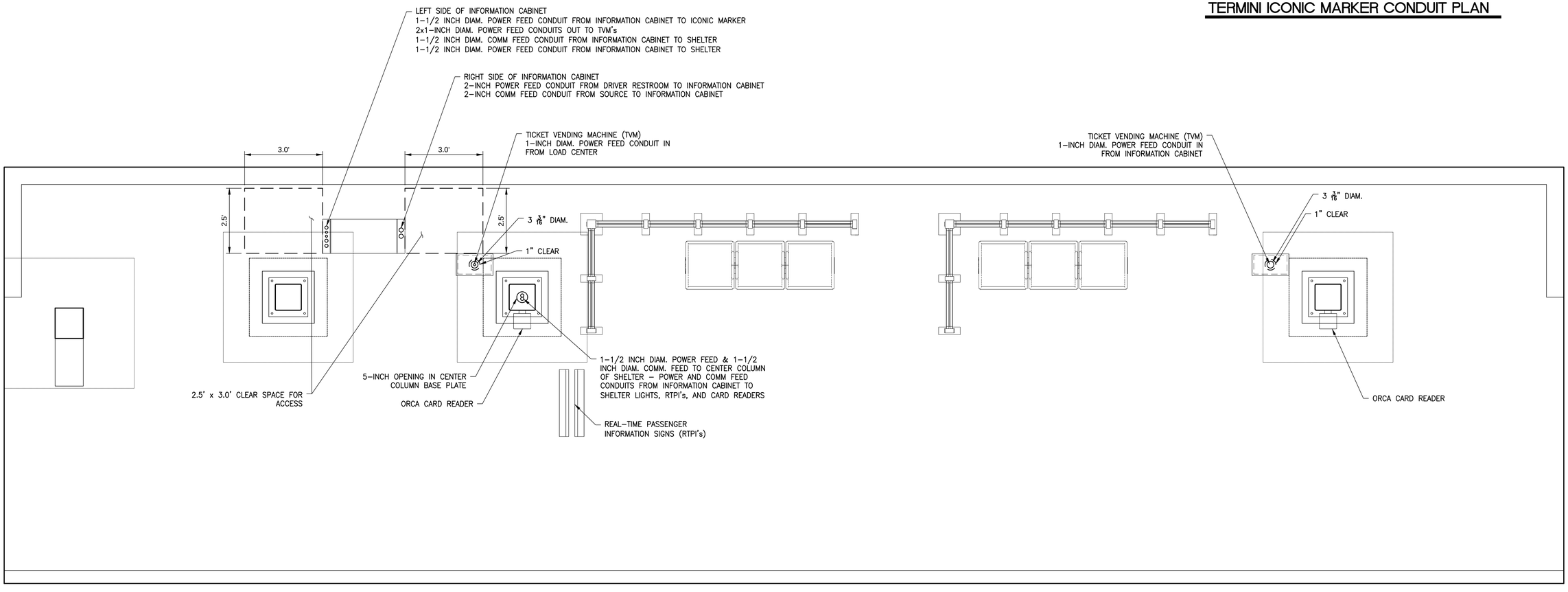

TERMINI ELECTRICAL AND COMM. CONDUIT PLAN

NOT TO SCALE

CALL BEFORE YOU DIG 1-800-424-5555

NO.	REVISION COMMENTS	BY	REVIEW	DATE

DESIGNER

DRAWN BY

CHECKED BY

JEDI A. SHARLEY
STATE OF WASHINGTON
40896
REGISTERED
PROFESSIONAL ENGINEER

9/24/21

communitytransit

Swift ORANGE LINE - 100% SUBMITTAL

TERMINI ELECTRICAL AND COMM. CONDUIT PLAN

TITLE

Otak

11241 Willows Road NE, Suite 200
Redmond, WA 98052
425.822.4446
www.otak.com

32880.H
PROJECT NUMBER

C4.402
DRAWING NO.

SHEET 261 OF 622

© 2021 OTAK, INC.

Plotted: Sep 27, 2021 - 5:14pm K:\Project\32800\32880H\CADD\ACAD\Dwg\C4.400-C4.403.dwg Layout Name: C4.402

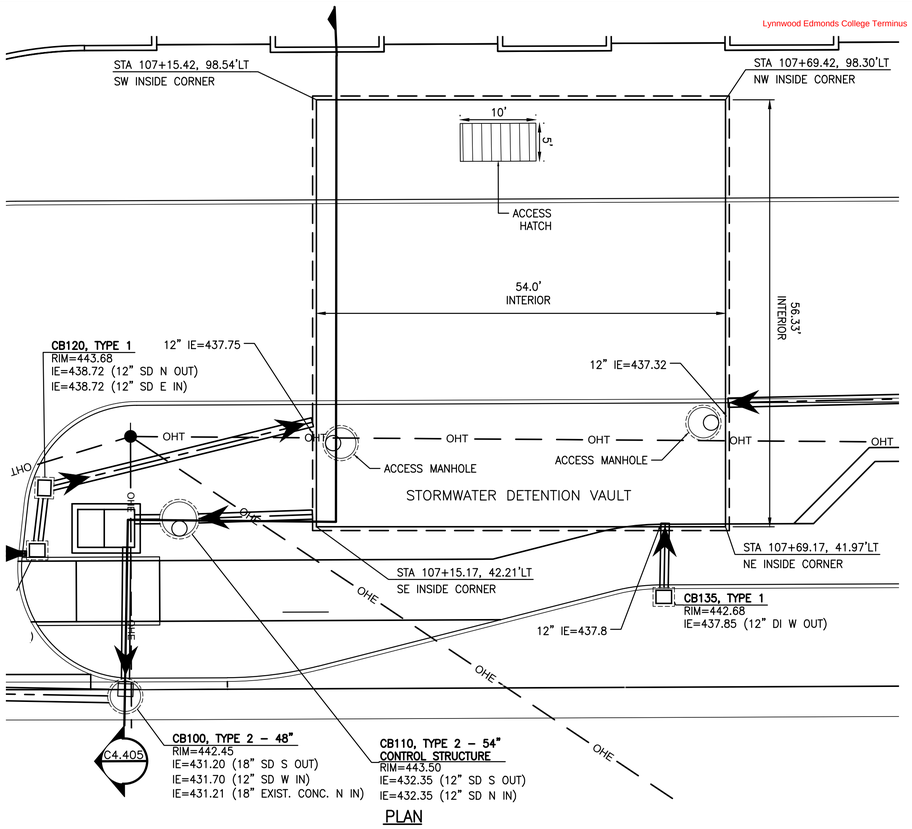

PLAN

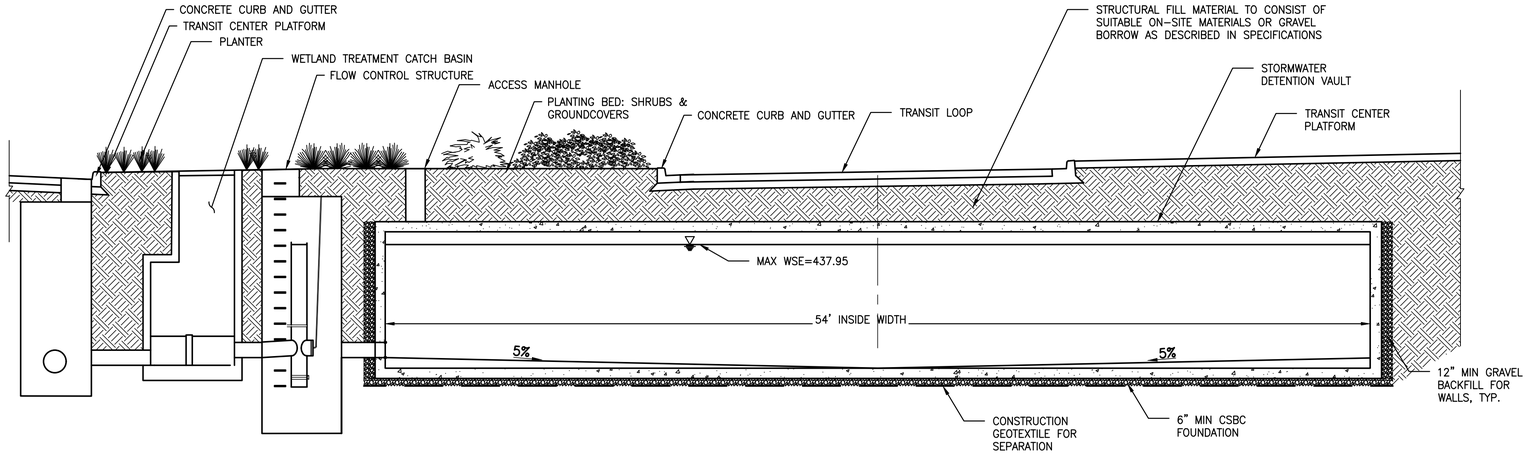

SECTION A

1 – STORMWATER DETENTION VAULT

NOT TO SCALE

DETENTION VAULT NOTES:

1. VAULT SHALL MEET REQUIREMENTS OF SNOHOMISH COUNTY 2021 ENGINEERING DESIGN AND DEVELOPMENT STANDARDS SECTION 5-15 AND SNOHOMISH COUNTY STD DWGS 5-230 AND 5-280.
2. VAULT SHALL BE PRECAST CEMENT CONCRETE PER SPECIAL PROVISIONS.
3. CONTRACTOR SHALL SUBMIT MANUFACTURER SHOP DRAWINGS AND STRUCTURAL CALCULATIONS PER SPECIAL PROVISIONS.
4. CONTRACTOR SHALL INSTALL PRECAST VAULT PER MANUFACTURER DETAILS AND INSTALLATION INSTRUCTIONS INCLUDING PROVIDING ON-SITE INSPECTION BY A MANUFACTURER REPRESENTATIVE.
5. SEE SHEET C4.406 FOR TYPICAL PRECAST CONCRETE PANEL VAULT DETAILS.

CALL BEFORE YOU DIG 1-800-424-5555

NO.	REVISION COMMENTS	BY	REVIEW	DATE

DESIGNER | DRAWN BY | CHECKED BY



10/20/21

communitytransit
Swift ORANGE LINE – 100% SUBMITTAL
STORM DRAINAGE DETAILS
EDMONDS COLLEGE DETENTION VAULT DETAILS

TITLE

Otak
11241 Willows Road NE, Suite 200
Redmond, WA 98052
425.822.4446
www.otak.com

32880.H
PROJECT NUMBER

C4.405
DRAWING NO.

SHEET 264 OF 622

© 2021 OTAK, INC.

Plotted: Oct 21, 2021 – 11:32am K:\Project\32800\32880H\CADD\ACAD\Dwg\C4.405-C4.415.dwg Layout Name: C4.405

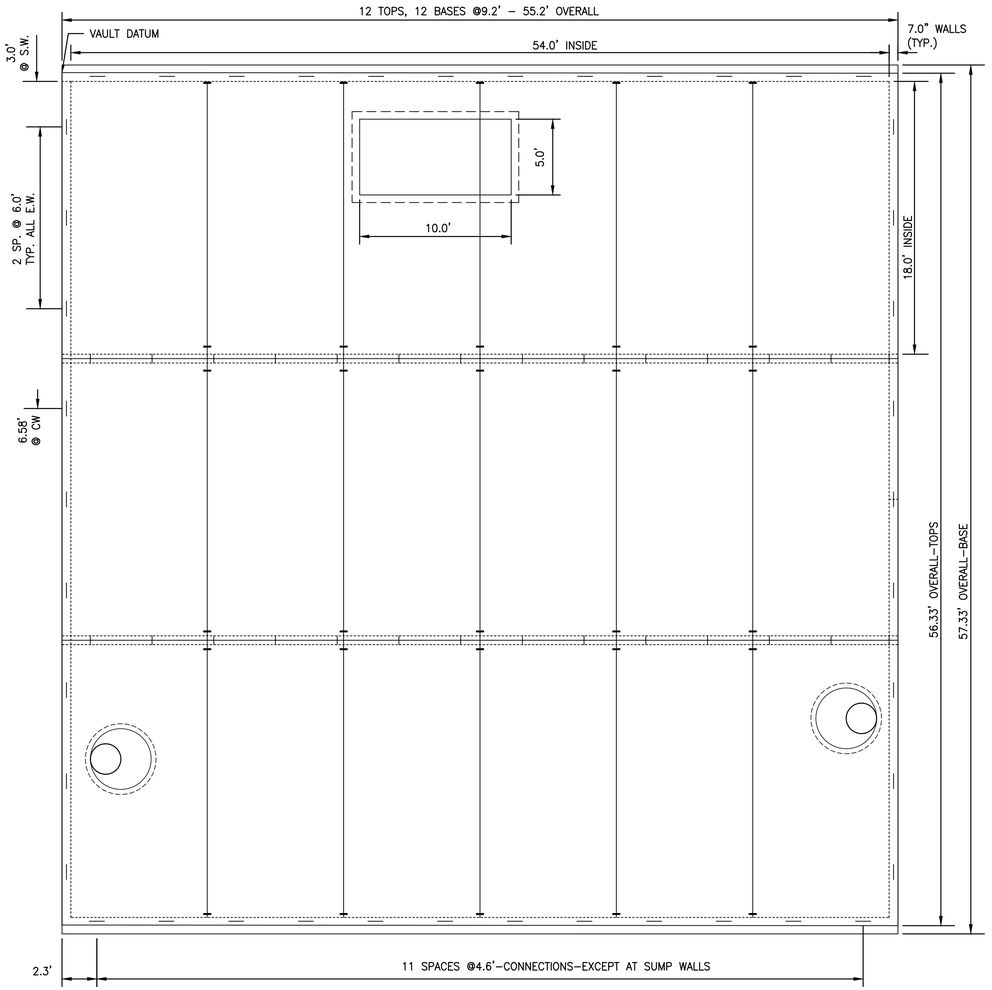

PRECAST CONCRETE PANEL VAULT - PLAN VIEW

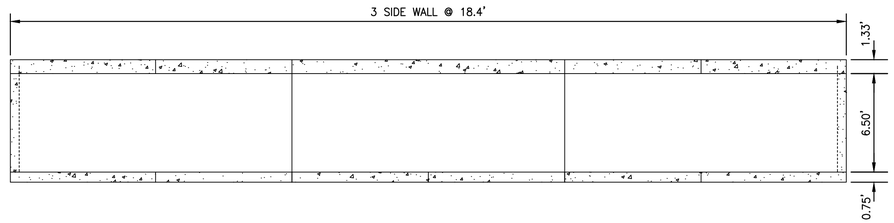

PRECAST CONCRETE PANEL VAULT - SIDE VIEW

CALL BEFORE YOU DIG 1-800-424-5555

NO.	REVISION COMMENTS	BY	REVIEW	DATE

DESIGNER | DRAWN BY | CHECKED BY

TYSON D. HOUNSEY, STATE OF WASHINGTON, 46957, REGISTERED PROFESSIONAL ENGINEER

9/29/21

communitytransit

Swift ORANGE LINE - 100% SUBMITTAL
STORM DRAINAGE DETAILS
EDMONDS COLLEGE DETENTION VAULT DETAILS

TITLE

Otak

11241 Willows Road NE, Suite 200
Redmond, WA 98052
425.822.4446
www.otak.com

32880.H
PROJECT NUMBER

C4.406
DRAWING NO.

SHEET 265 OF 622

© 2021 OTAK, INC.

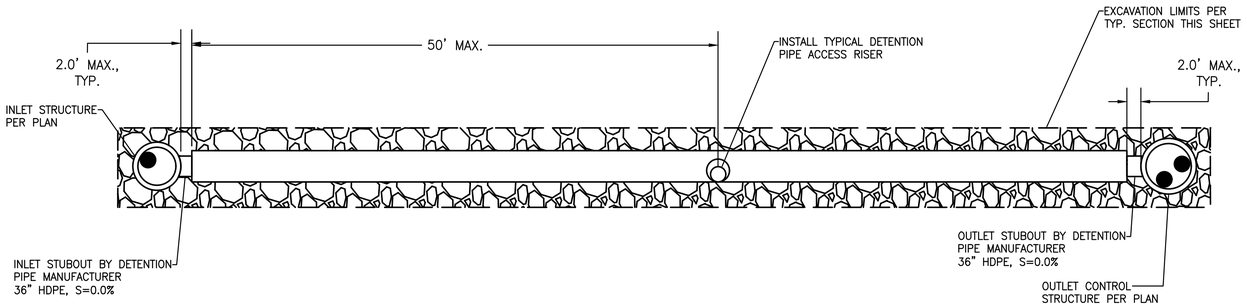

TYPICAL DETENTION PIPE SYSTEM PLAN

NOT TO SCALE

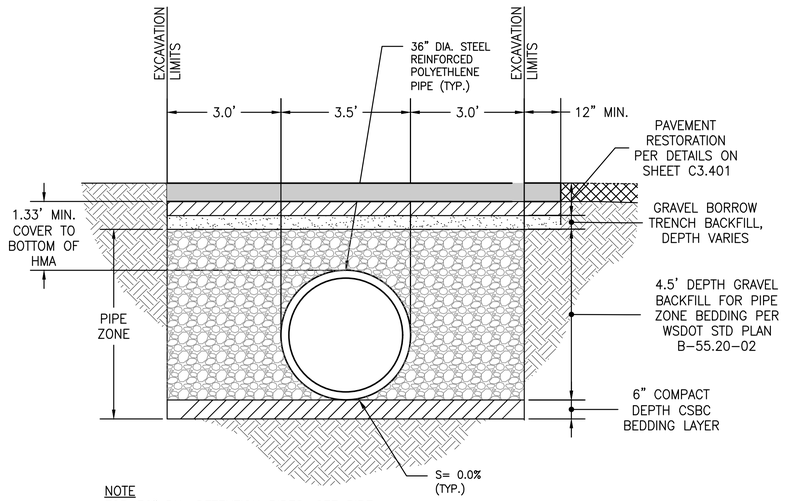

NOTE
FOR 36" DIA. DETENTION PIPES, SEE PIPE INVERTS ON PROFILE SHEETS C4.500–C4.501.

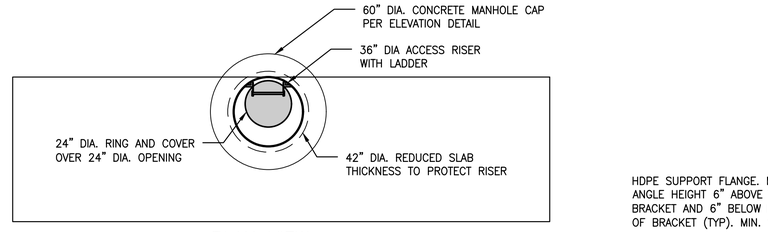

PLAN VIEW

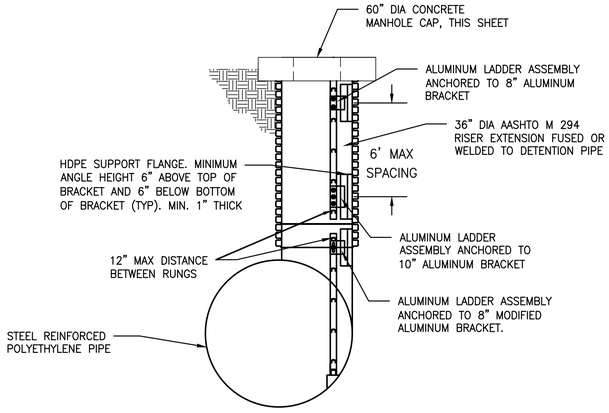

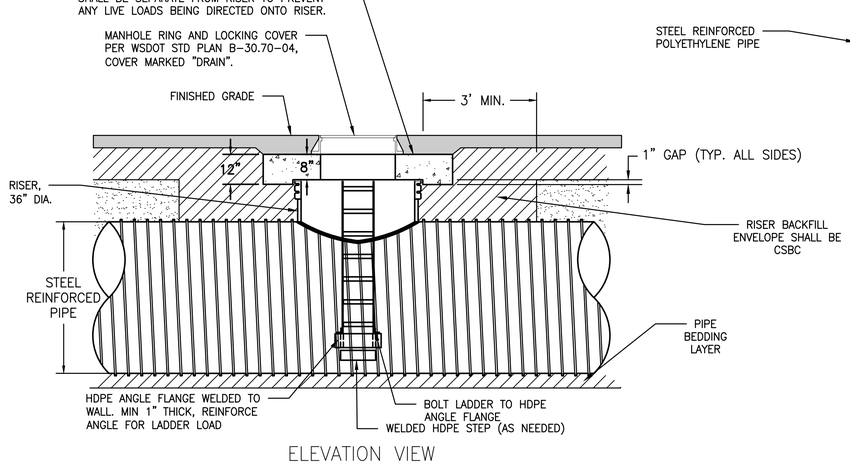

ELEVATION VIEW

NOTE:
1. DESIGN IN ACCORDANCE WITH AASHTO, 17th EDITION.
2. DESIGN LOAD HS25.
3. PROVIDE LADDER SEGMENTS TO REACH TOTAL RISER HEIGHT.
4. ALL CONNECTION HARDWARE SHALL BE 304 STAINLESS STEEL AND INSULATED FROM ALUMINUM.
5. PENETRATION OF OUTER TANK/RISER WALL IS PROHIBITED.
6. FIXED LADDER SHALL MEET ALL WISHA REQUIREMENTS

DETENTION PIPE SYSTEM ACCESS RISER

NOT TO SCALE

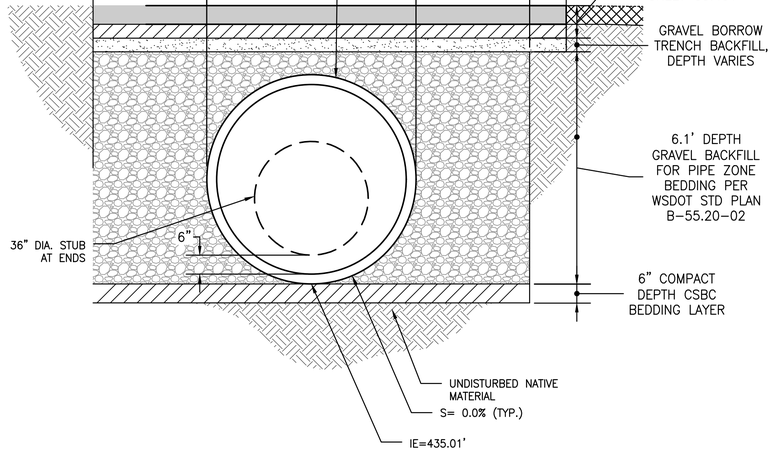

DETENTION PIPE NOTES:
1. DETENTION PIPES SHALL MEET REQUIREMENTS OF SNOHOMISH COUNTY 2021 ENGINEERING DESIGN AND DEVELOPMENT STANDARDS SECTION 5–16 AND SNOHOMISH COUNTY STD DWGS 5–290.
2. CONTRACTOR SHALL SUBMIT MANUFACTURER SHOP DRAWINGS AND STRUCTURAL CALCULATIONS PER SPECIAL PROVISIONS.
3. CONTRACTOR SHALL INSTALL DETENTION PIPES PER MANUFACTURER DETAILS AND INSTALLATION INSTRUCTIONS INCLUDING PROVIDING ON–SITE INSPECTION BY A MANUFACTURING REPRESENTATIVE.

DETENTION PIPE SYSTEM - TYPICAL SECTION

NOT TO SCALE

CALL BEFORE YOU DIG 1–800–424–5555

NO.	REVISION COMMENTS	BY	REVIEW	DATE
				3/22/2022

DESIGNER
DRAWN BY
CHECKED BY

JASON D. HOUNSELL
STATE OF WASHINGTON
46957
REGISTERED PROFESSIONAL ENGINEER
10/1/21

communitytransit Swift ORANGE LINE – 100% SUBMITTAL

STORM DRAINAGE DETAILS
EDMONDS COLLEGE DETENTION TANK DETAILS

TITLE

Otak
11241 Willows Road NE, Suite 200
Redmond, WA 98052
425.822.4446
www.otak.com

32880.H
PROJECT NUMBER

C4.407
DRAWING NO.

SHEET 266 OF 622

© 2021 OTAK, INC.

Plotted: Oct 01, 2021 – 2:40pm K:\Project\32800\32880H\CADD\ACAD\Dwg\C4.405–C4.415.dwg Layout Name: C4.407

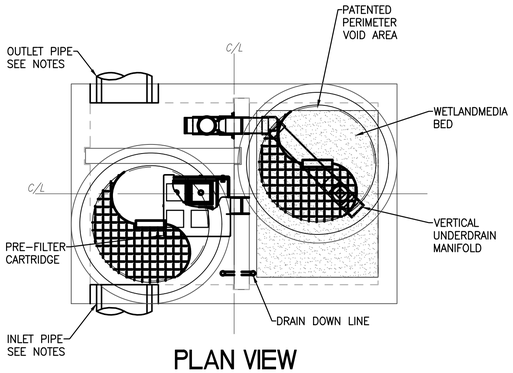

PLAN VIEW

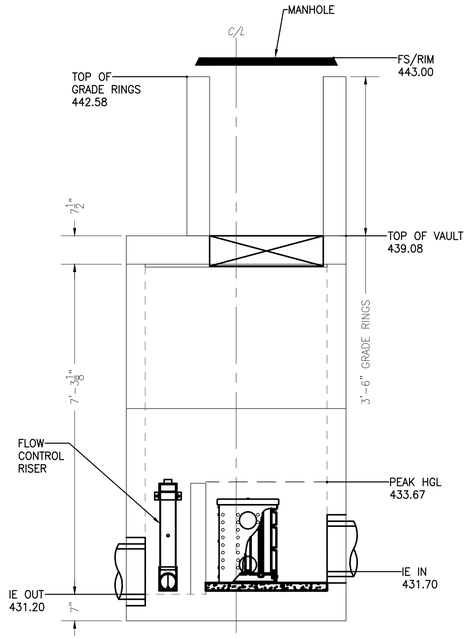

LEFT END VIEW

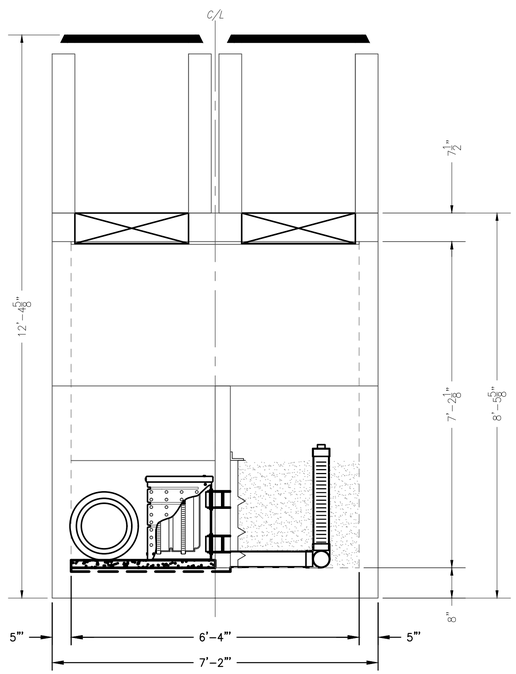

ELEVATION VIEW

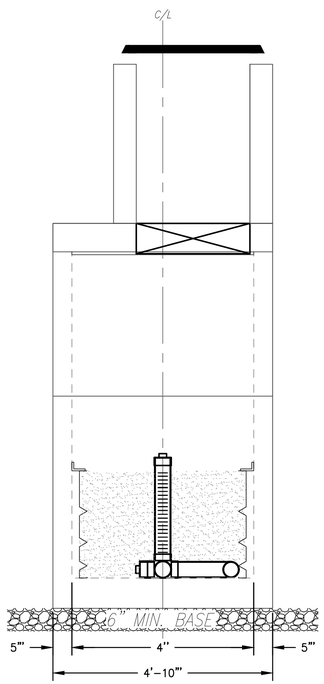

RIGHT END VIEW

SOUTH STORMWATER TREATMENT FACILITY - EDMONDS COLLEGE (STATION # EB 3221 AND WB 3224)

NTS

SITE SPECIFIC DATA			
TREATMENT REQUIRED			
VOLUME BASED (CF)		2-YEAR RELEASE RATE(CFS)	
		0.011	
PEAK BYPASS REQUIRED (CFS) - IF APPLICABLE			0.06
PIPE DATA	I.E.	MATERIAL	DIAMETER
INLET PIPES	431.70	CPP	12"
OUTLET PIPE	431.20	CPP	12"
	PRETREATMENT	BIOFILTRATION	DISCHARGE
RIM ELEVATION	443.00	443.0000	443.0000
SURFACE LOAD	HS-20	HS-20	HS-20
FRAME & COVER	ø30"	ø30"	N/A
WETLANDMEDIA VOLUME (CY)			0.86
ORIFICE SIZE (DIA. INCHES)			2 EA ø0.41"
NOTES: PRELIMINARY, NOT FOR CONSTRUCTION.			

2-YEAR RELEASE RATE(CFS)	0.011
OPERATING HEAD (FT)	2.3
PRETREATMENT LOADING RATE (GPM/SF)	0.4
WETLAND MEDIA LOADING RATE (GPM/SF)	0.2

TREATMENT FACILITY NOTES:

1. TREATMENT FACILITY DETAILS ARE BASED UPON MODULAR WETLANDS UNITS MANUFACTURED BY BIOCLEAN. THE TREATMENT FACILITIES MUST MEET PERFORMANCE SPECIFICATIONS PROVIDED IN THE SPECIAL PROVISIONS.
2. CONTRACTOR SHALL SUBMIT MANUFACTURER SHOP DRAWINGS AND STRUCTURAL CALCULATIONS PER SPECIAL PROVISIONS.

CALL BEFORE YOU DIG 1-800-424-5555

NO.	REVISION COMMENTS	BY	REVIEW	DATE

DESIGNER | DRAWN BY | CHECKED BY



9/29/21

communitytransit
Swift ORANGE LINE - 100% SUBMITTAL
STORM DRAINAGE DETAILS
EDMONDS COLLEGE TREATMENT VAULT DETAILS

TITLE

Otak
11241 Willows Road NE, Suite 200
Redmond, WA 98052
425.822.4446
www.otak.com

32880.H
PROJECT NUMBER

C4.408
DRAWING NO.

SHEET 267 OF 622

© 2021 OTAK, INC.

Plotted: Sep 30, 2021 - 12:06pm K:\Project\32800\32880H\CADD\ACAD\Dwg\C4.405-C4.415.dwg Layout Name: C4.408

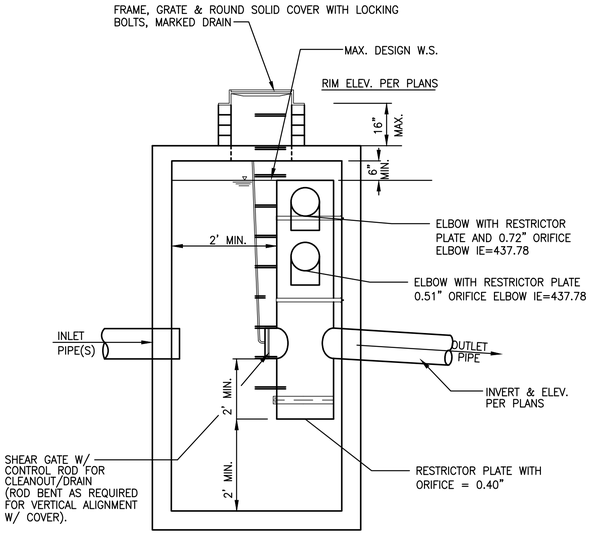

SECTION A–A

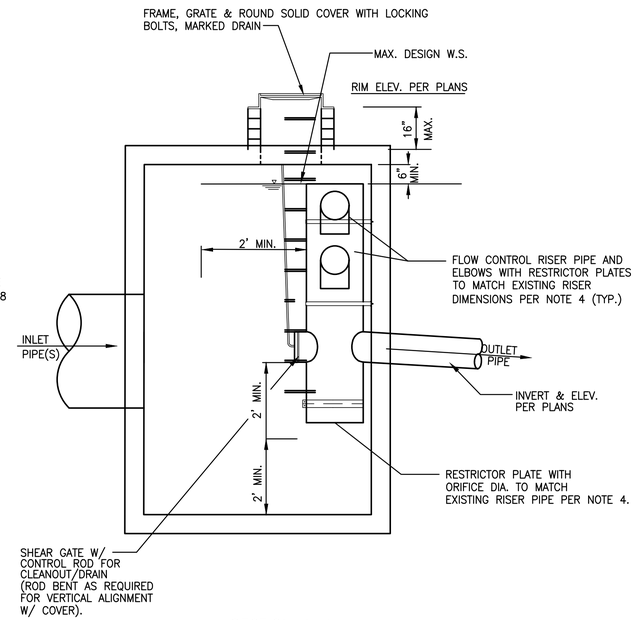

SECTION A–A

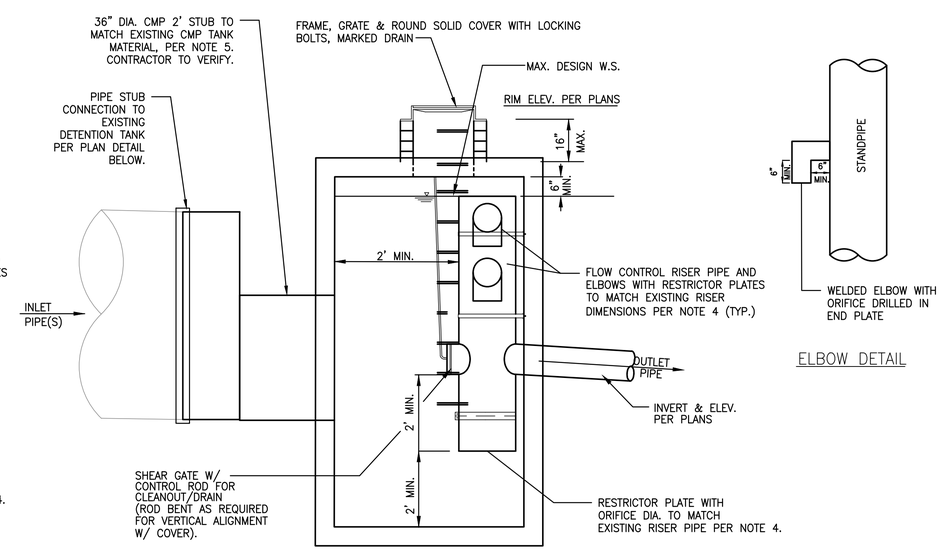

SECTION A–A

ELBOW DETAIL

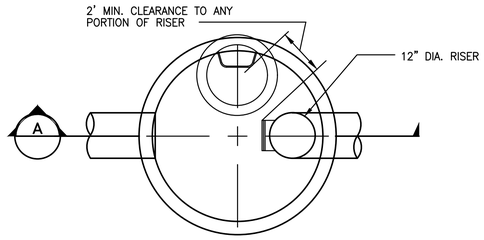

PLAN VIEW

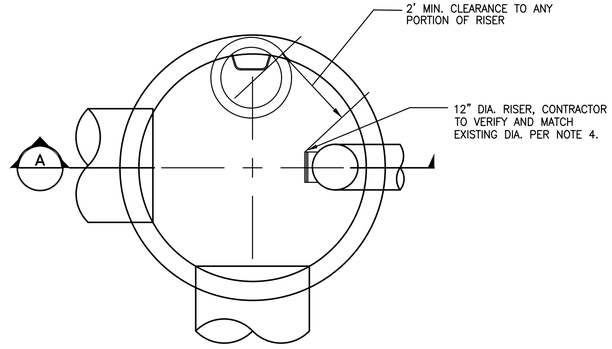

PLAN VIEW

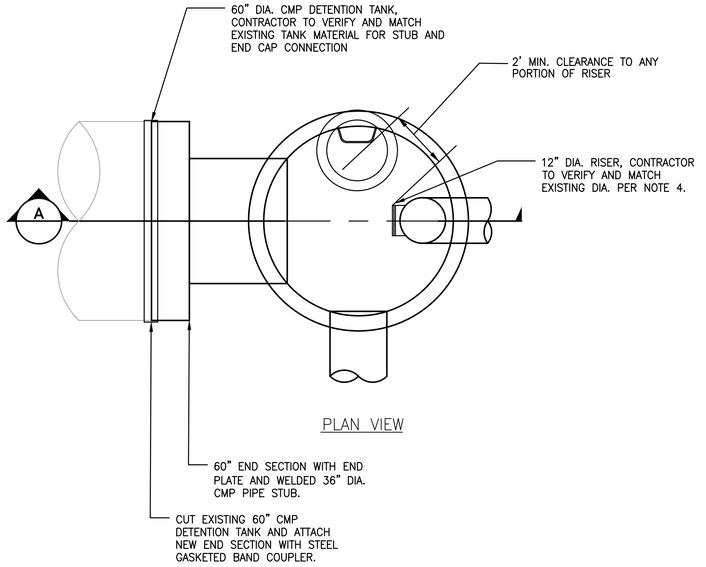

PLAN VIEW

FLOW CONTROL STRUCTURE, CB110

NTS

NOTES

1. INSTALL CONTROL STRUCTURE AND INTERNAL FLOW CONTROL RISER PER CITY OF LYNNWOOD STD DRAWING NO. STD4–14.
2. RISER PIPE MATERIAL SHALL BE 0.064 INCH CORRUGATED ALUMINUM ALLOY DRAIN PIPE.
3. FRAME & LADDER OR STEPS OFFSET SO:
   A. CLEANOUT GATE IS VISIBLE FROM TOP.
   B. CLIMB–DOWN SPACE IS CLEAR OF RISER AND CLEANOUT GATE.

FLOW CONTROL STRUCTURE, CB222

NTS

NOTES

1. INSTALL CONTROL STRUCTURE AND INTERNAL FLOW CONTROL RISER PER CITY OF LYNNWOOD STD DRAWING NO. STD4–14.
2. RISER PIPE MATERIAL SHALL BE 0.064 INCH CORRUGATED ALUMINUM ALLOY DRAIN PIPE.
3. FRAME & LADDER OR STEPS OFFSET SO:
   A. CLEANOUT GATE IS VISIBLE FROM TOP.
   B. CLIMB–DOWN SPACE IS CLEAR OF RISER AND CLEANOUT GATE.
4. NEW FLOW CONTROL RISER IS INTENDED TO PROVIDE THE SAME FLOW CONTROL PERFORMANCE AS THE EXISTING RISER. CONTRACTOR SHALL MEASURE THE ORIFICE SIZES, ELBOW SIZES, AND ANY NOTCH WEIRS IN THE EXISTING RISER AND PROVIDE A NEW RISER WITH MATCHING FLOW CONTROL DIMENSIONS.

FLOW CONTROL STRUCTURE, CB231

NTS

NOTES

1. INSTALL CONTROL STRUCTURE AND INTERNAL FLOW CONTROL RISER PER CITY OF LYNNWOOD STD DRAWING NO. STD4–14.
2. RISER PIPE MATERIAL SHALL BE 0.064 INCH CORRUGATED ALUMINUM ALLOY DRAIN PIPE.
3. FRAME & LADDER OR STEPS OFFSET SO:
   A. CLEANOUT GATE IS VISIBLE FROM TOP.
   B. CLIMB–DOWN SPACE IS CLEAR OF RISER AND CLEANOUT GATE.
4. NEW FLOW CONTROL RISER IS INTENDED TO PROVIDE THE SAME FLOW CONTROL PERFORMANCE AS THE EXISTING RISER. CONTRACTOR SHALL MEASURE THE ORIFICE SIZES, ELBOW SIZES, AND ANY NOTCH WEIRS IN THE EXISTING RISER AND PROVIDE A NEW RISER WITH MATCHING FLOW CONTROL DIMENSIONS.
5. NEW DETENTION TANK END SECTION SHALL BE EITHER MATERIAL BELOW, CONTRACTOR TO MATCH EXISTING TANK MATERIAL:
   A. CORRUGATED STEEL PIPE 14 GAGE MIN, WITH TREATMENT #1.
   B. CORRUGATED ALUMINIUM PIPE 12 GAGE MIN.

CALL BEFORE YOU DIG 1–800–424–5555

NO.	REVISION COMMENTS	BY	REVIEW	DATE

DESIGNER | DRAWN BY | CHECKED BY



10/8/21

communitytransit

Swift ORANGE LINE – 100% SUBMITTAL

STORM DRAINAGE DETAILS

EDMONDS COLLEGE CONTROL STRUCTURE DETAILS

TITLE

Otak

11241 Willows Road NE, Suite 200
Redmond, WA 98052
425.822.4446
www.otak.com

32880.H
PROJECT NUMBER

C4.409
DRAWING NO.

SHEET 268 OF 622

© 2021 OTAK, INC.

Plotted: Oct 08, 2021 - 2:24pm K:\Project\32800\32880H\CADD\ACAD\Dwg\C4.405-C4.415.dwg Layout Name: C4.409

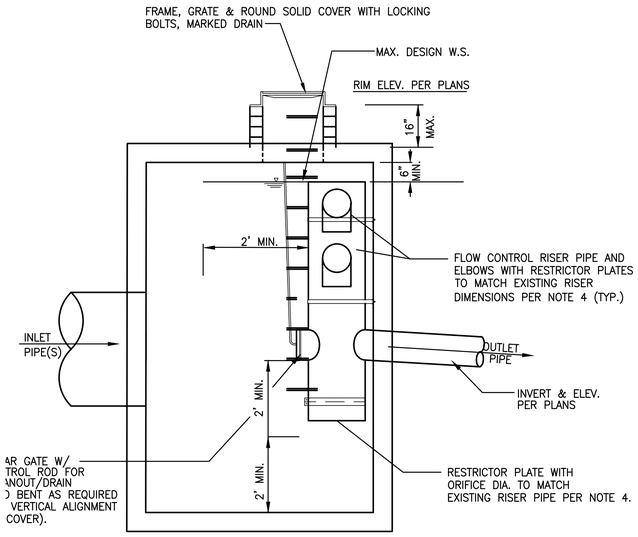

SECTION A–A

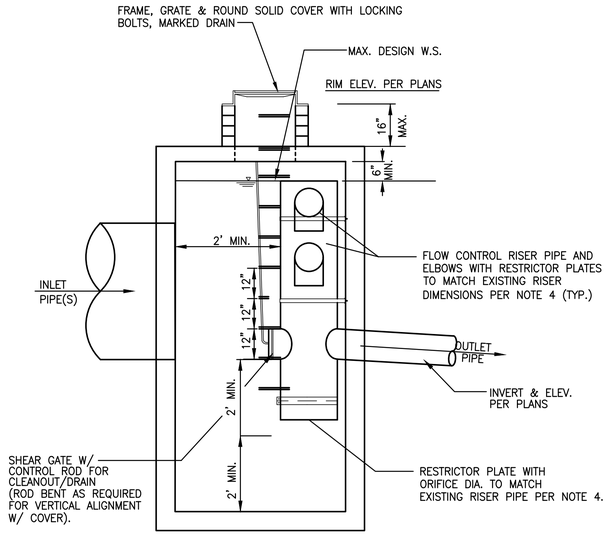

SECTION A–A

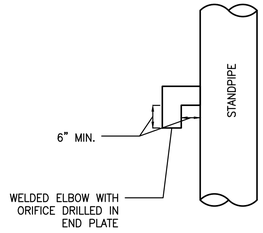

ELBOW DETAIL

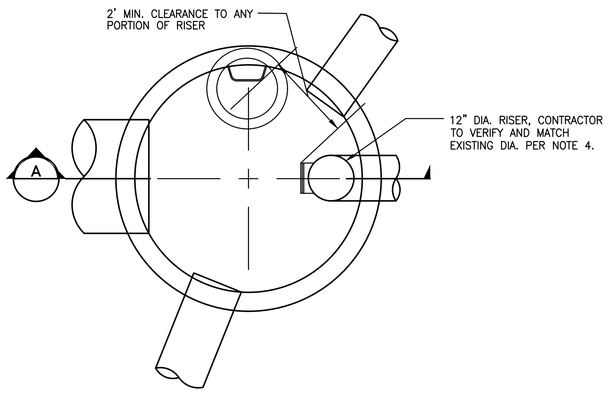

PLAN VIEW

FLOW CONTROL STRUCTURE, CB250

NTS

NOTES

1. INSTALL CONTROL STRUCTURE AND INTERNAL FLOW CONTROL RISER PER CITY OF LYNNWOOD STD DRAWING NO. STD4–14.
2. RISER PIPE MATERIAL SHALL BE 0.064 INCH CORRUGATED ALUMINUM ALLOY DRAIN PIPE.
3. FRAME & LADDER OR STEPS OFFSET SO:
   A. CLEANOUT GATE IS VISIBLE FROM TOP.
   B. CLIMB–DOWN SPACE IS CLEAR OF RISER AND CLEANOUT GATE.
4. NEW FLOW CONTROL RISER IS INTENDED TO PROVIDE THE SAME FLOW CONTROL PERFORMANCE AS THE EXISTING RISER. CONTRACTOR SHALL MEASURE THE ORIFICE SIZES, ELBOW SIZES, AND ANY NOTCH WEIRS IN THE EXISTING RISER AND PROVIDE A NEW RISER WITH MATCHING FLOW CONTROL DIMENSIONS.

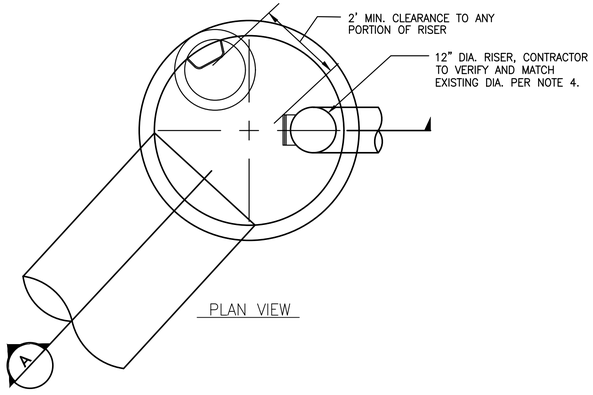

PLAN VIEW

FLOW CONTROL STRUCTURE, CB310

NTS

NOTES

1. INSTALL CONTROL STRUCTURE AND INTERNAL FLOW CONTROL RISER PER CITY OF LYNNWOOD STD DRAWING NO. STD4–14.
2. RISER PIPE MATERIAL SHALL BE 0.064 INCH CORRUGATED ALUMINUM ALLOY DRAIN PIPE.
3. FRAME & LADDER OR STEPS OFFSET SO:
   A. CLEANOUT GATE IS VISIBLE FROM TOP.
   B. CLIMB–DOWN SPACE IS CLEAR OF RISER AND CLEANOUT GATE.
4. NEW FLOW CONTROL RISER IS INTENDED TO PROVIDE THE SAME FLOW CONTROL PERFORMANCE AS THE EXISTING RISER. CONTRACTOR SHALL MEASURE THE ORIFICE SIZES, ELBOW SIZES, AND ANY NOTCH WEIRS IN THE EXISTING RISER AND PROVIDE A NEW RISER WITH MATCHING FLOW CONTROL DIMENSIONS.

CALL BEFORE YOU DIG 1–800–424–5555

NO.	REVISION COMMENTS	BY	REVIEW	DATE

DESIGNER

DRAWN BY

CHECKED BY



10/4/21

communitytransit

Swift ORANGE LINE – 100% SUBMITTAL

STORM DRAINAGE DETAILS

EDMONDS COLLEGE CONTROL STRUCTURES

TITLE

Otak

11241 Willows Road NE, Suite 200
Redmond, WA 98052
425.822.4446
www.otak.com

32880.H
PROJECT NUMBER

C4.410
DRAWING NO.

SHEET 269 OF 622

© 2021 OTAK, INC.

Plotted: Oct 04, 2021 – 6:51pm K:\Project\32800\32880H\CADD\ACAD\Dwg\C4.405–C4.415.dwg Layout Name: C4.410

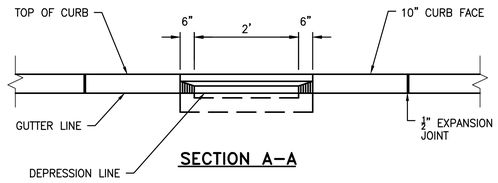

SECTION A–A

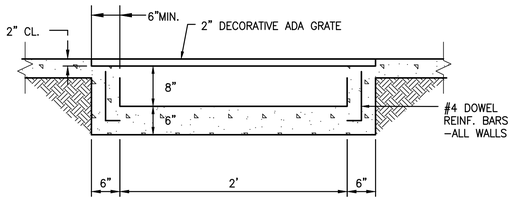

SECTION B–B

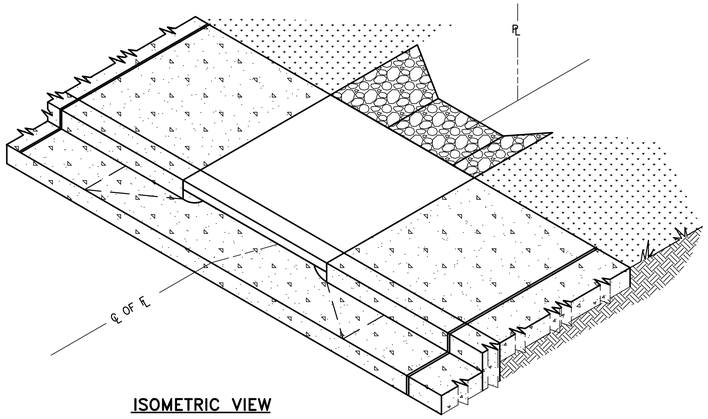

ISOMETRIC VIEW

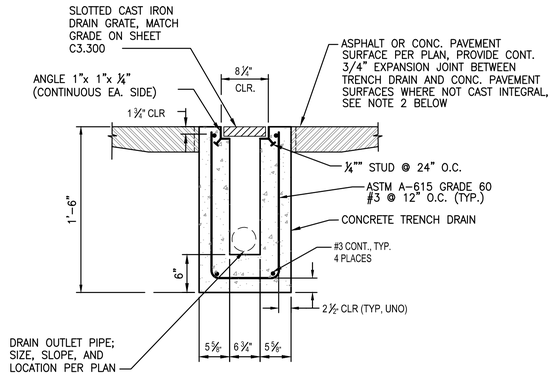

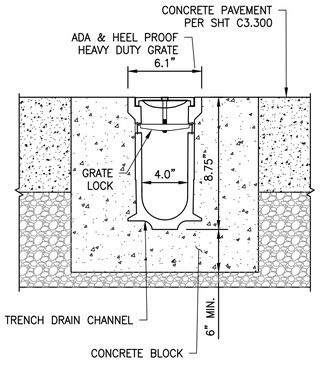

NOTE:

1. CONTRACTOR MAY PROPOSE ALTERNATE, EQUIVALENT TRENCH DRAIN SYLE/CONFIGURATION (i.e., PREFABRICATED OR MANUFACTURED) FOR USE ON THIS PROJECT WITH APPROVAL OF ENGINEER.
2. CONTRACTOR MAY CAST TRENCH INTEGRAL WITH ADJACENT CONCRETE PAVEMENT TO FACILITATE CONSTRUCTION UPON REQUEST AND WITH APPROVAL OF ENGINEER. THE CONCRETE THICKNESS WOULD NEED TO BE INCREASED AT THE INTERFACE OF THE TRENCH WALL AND THE PAVEMENT BEYOND THAT SHOWN UNDER THIS CONDITION. ALSO, UNDER THIS CONDITION, A CONTRACTION JOINT SHALL BE PROVIDED ALONG THE LENGTH OF THE TRENCH AT THE DIMENSIONED EDGE WHERE IT MEETS THE PAVEMENT SURFACE. TRANSVERSE JOINTS SHALL MATCH THE PAVEMENT SURFACE.

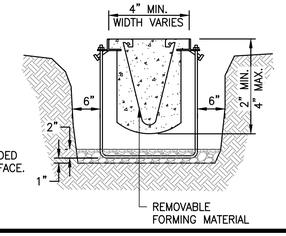

GRATED TRENCH DRAIN

NTS

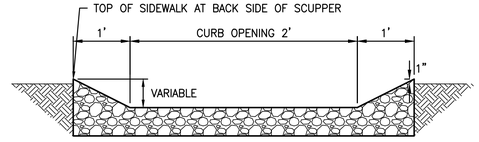

SECTION C–C
SPILLWAY

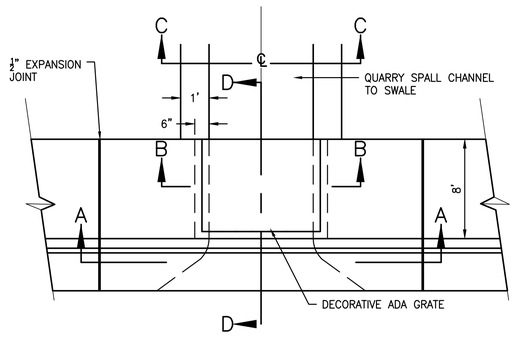

SCUPPER PLAN VIEW

NOTES

1. TRANSITION TO SPILLWAY/CHANNEL PER PLANS.
2. A CENTER WALL SHALL BE INSTALLED IN SCUPPERS WIDER THAN 4' OR IF MORE THAN 1 SCUPPER IS BUILT IN SERIES.
3. EXPANSION JOINT FILLER SHALL BE ½" BITUMINOUS TYPE PREFORMED EXPANSION JOINT FILLER, ASTM D–1751.
4. CONCRETE FOR THE SCUPPER SHALL BE MIN. CLASS 3000.

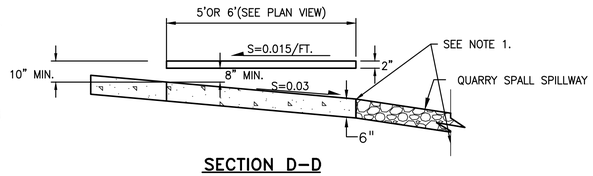

SECTION D–D

CONCRETE SCUPPER

NTS

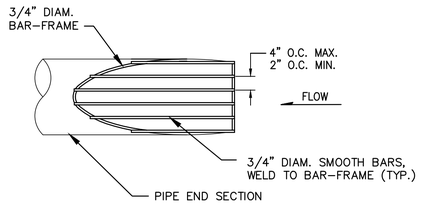

PLAN

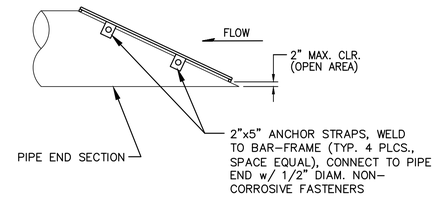

ELEVATION

NOTE:

1. ALL METAL FASTENERS AND MATERIALS FOR DEBRIS BARRIER SHALL BE GALVANIZED IN MANUFACTURE OR APPROVED EQUAL TREATMENT FOR CORROSION PROTECTION.

DEBRIS BARRIER

NTS

CALL BEFORE YOU DIG 1–800–424–5555

NO.	REVISION COMMENTS	BY	REVIEW	DATE

DESIGNER | DRAWN BY | CHECKED BY

LYSON D. HOUSE — STATE OF WASHINGTON — 46957 — REGISTERED PROFESSIONAL ENGINEER

9/29/21

communitytransit

Swift ORANGE LINE – 100% SUBMITTAL

STORM DRAINAGE DETAILS

EDMONDS COLLEGE CURB DRAINAGE DETAILS

TITLE

Otak

11241 Willows Road NE, Suite 200
Redmond, WA 98052
425.822.4446
www.otak.com

32880.H
PROJECT NUMBER

C4.411
DRAWING NO.

SHEET 270 OF 622

© 2021 OTAK, INC.

Plotted: Sep 30, 2021 – 12:06pm K:\Project\32800\32880H\CADD\ACAD\Dwg\C4.405–C4.415.dwg Layout Name: C4.411

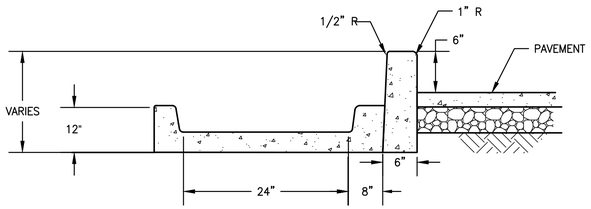

NOTES:
1. CONCRETE FOR THE RUNNEL SHALL BE MIN. CLASS 3000

CONCRETE RUNNEL

NOT TO SCALE

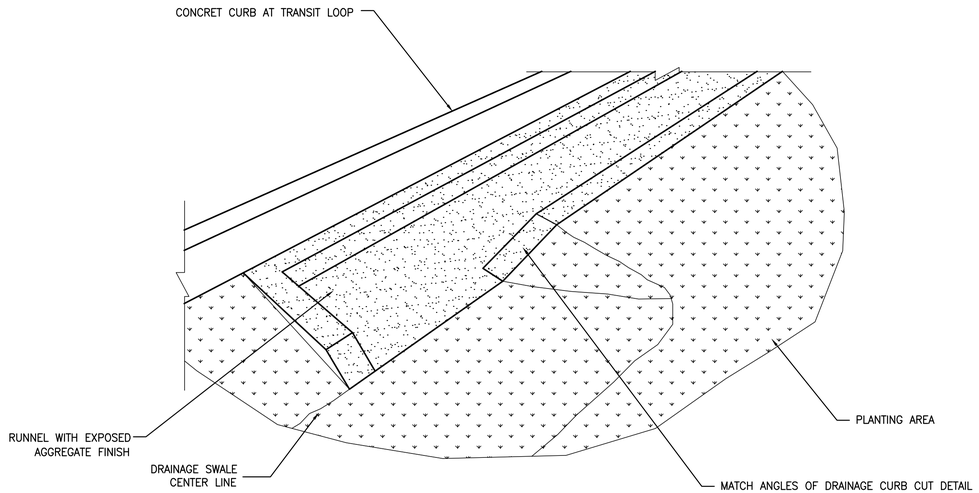

RUNNEL AT DRAINAGE SWALE

NOT TO SCALE

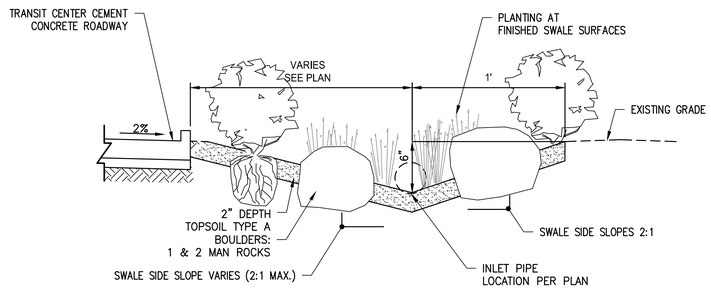

DRAINAGE SWALE

NOT TO SCALE

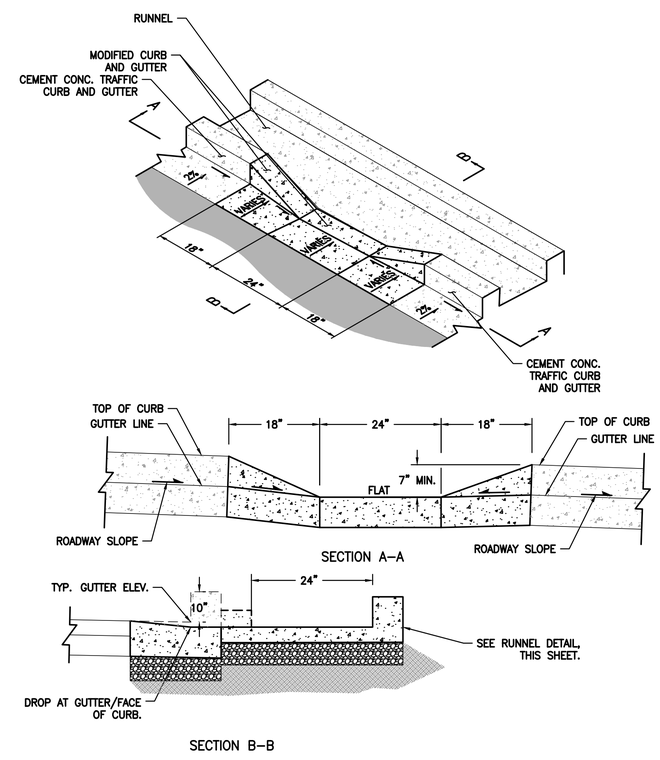

DRAINAGE CURB CUT

NOT TO SCALE

CALL BEFORE YOU DIG 1–800–424–5555

NO.	REVISION COMMENTS	BY	REVIEW	DATE

DESIGNER | DRAWN BY | CHECKED BY

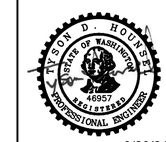

9/29/21

communitytransit
Swift ORANGE LINE – 100% SUBMITTAL
STORM DRAINAGE DETAILS
EDMONDS COLLEGE CURB DRAINAGE DETAILS

TITLE

Otak

11241 Willows Road NE, Suite 200
Redmond, WA 98052
425.822.4446
www.otak.com

32880.H
PROJECT NUMBER

C4.412

DRAWING NO.

SHEET 271 OF 622

© 2021 OTAK, INC.

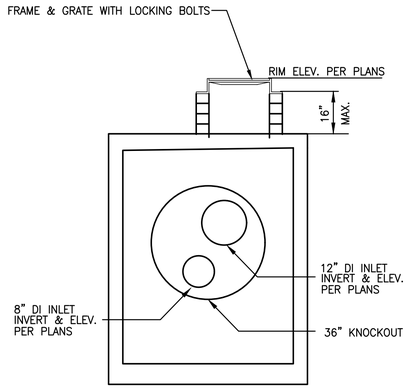

SECTION A–A

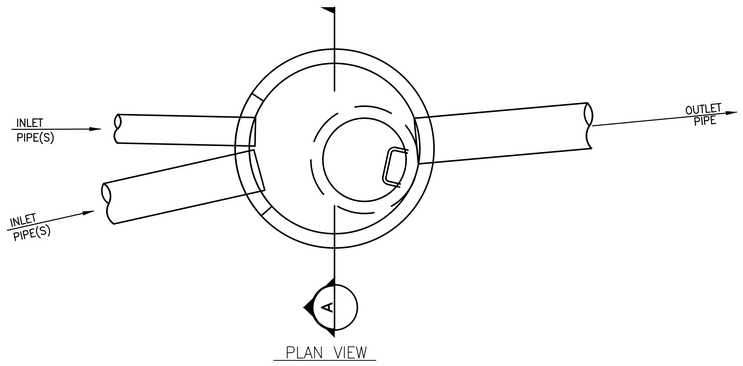

PLAN VIEW

CB330 - MULTIPLE PIPE INLET DETAIL

NOT TO SCALE
WESTERN TERMINUS–EDMONDS COLLEGE (STATION # EB 3221 & WB 3222)

CALL BEFORE YOU DIG 1–800–424–5555

NO.	REVISION COMMENTS	BY	REVIEW	DATE

DESIGNER | DRAWN BY | CHECKED BY



9/29/21

communitytransit

Swift ORANGE LINE – 100% SUBMITTAL

STORM DRAINAGE DETAILS

WESTERN TERMINUS- EDMONDS COLLEGE (STATION #EB 3221 & WB 3222

TITLE

Otak

11241 Willows Road NE, Suite 200
Redmond, WA 98052
425.822.4446
www.otak.com

32880.H
PROJECT NUMBER

C4.413
DRAWING NO.

SHEET 272 OF 622

© 2021 OTAK, INC.

Plotted: Sep 30, 2021 – 12:06pm K:\Project\32800\32880H\CADD\ACAD\Dwg\C4.405–C4.415.dwg Layout Name: C4.413

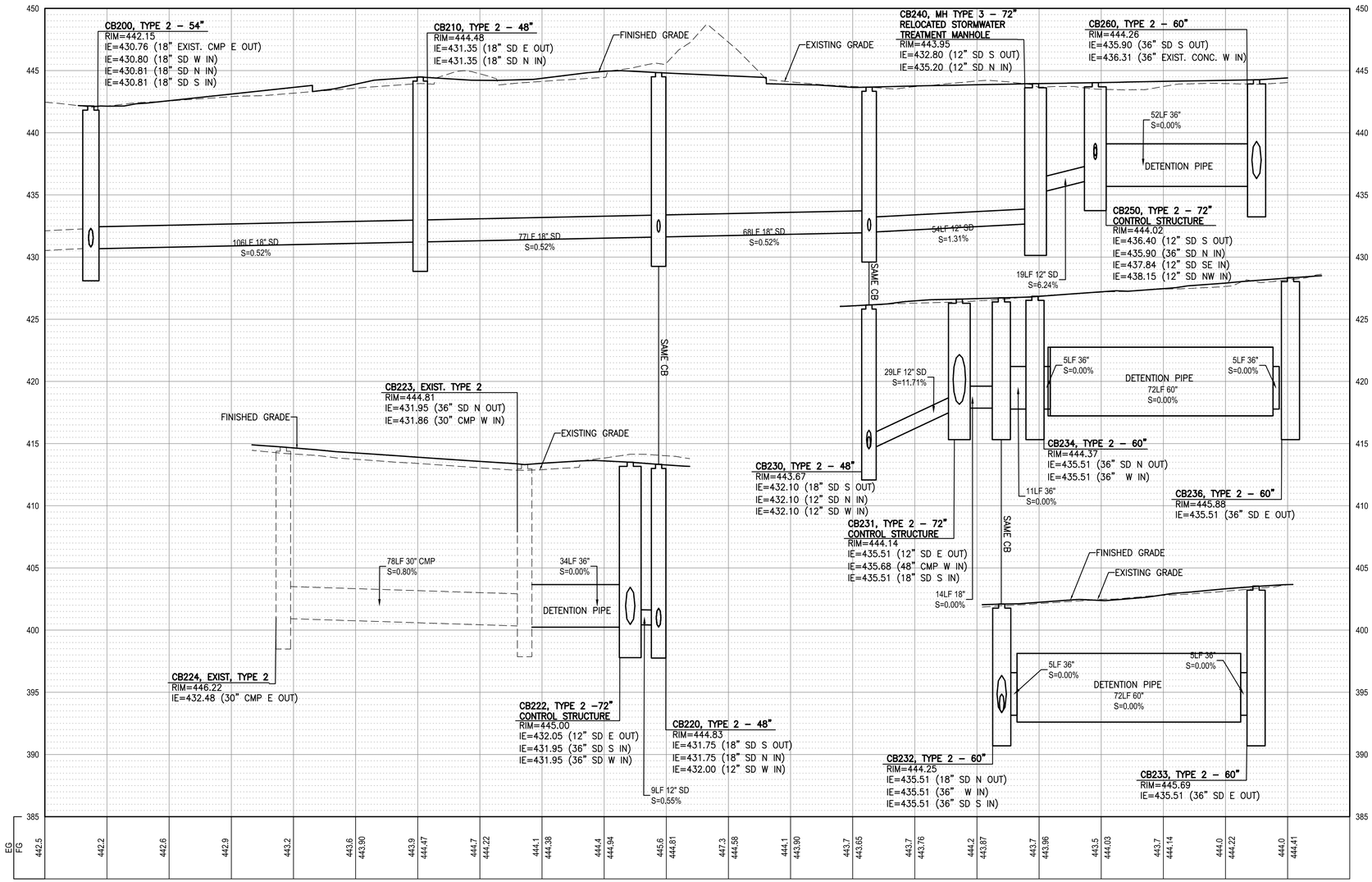

NOTES:
PIPE LENGTHS SHOWN IN PLAN AND PROFILE ARE MEASURED CENTER OF STRUCTURE TO CENTER OF STRUCTURE.

CB 225 TO CB 100 (EDMONDS COLLEGE DRAINAGE SYSTEM)

SEE DWGS C4.300 – C4.301 FOR PLAN VIEW (APPROX. STA. 106+40 TO 109+10)

HORZ 20 0 20 40
VERT 5 0 5 10
SCALE IN FEET

CALL BEFORE YOU DIG 1–800–424–5555

NO.	REVISION COMMENTS	BY	REVIEW	DATE

DESIGNER

DRAWN BY

CHECKED BY

KEVIN C. KRAXBERGER
STATE OF WASHINGTON
39870
REGISTERED PROFESSIONAL ENGINEER
10/4/21

DIXON D. HOUNSEL
STATE OF WASHINGTON
46957
REGISTERED PROFESSIONAL ENGINEER
9/30/21

communitytransit

Swift ORANGE LINE – 100% SUBMITTAL
STORM DRAIN PROFILES
WESTERN TERMINUS-EDMONDS COLLEGE
(STATION # EB 3221 & WB 3222)

TITLE

Otak
11241 Willows Road NE, Suite 200
Redmond, WA 98052
425.822.4446
www.otak.com

32880.H
PROJECT NUMBER

C4.500
DRAWING NO.

SHEET 283 OF 622

© 2021 OTAK, INC.

Plotted: Oct 04, 2021 – 4:57pm K:\Project\32800\32880H\CADD\ACAD\Dwg\C4.500–C4.505.dwg Layout Name: C4.500

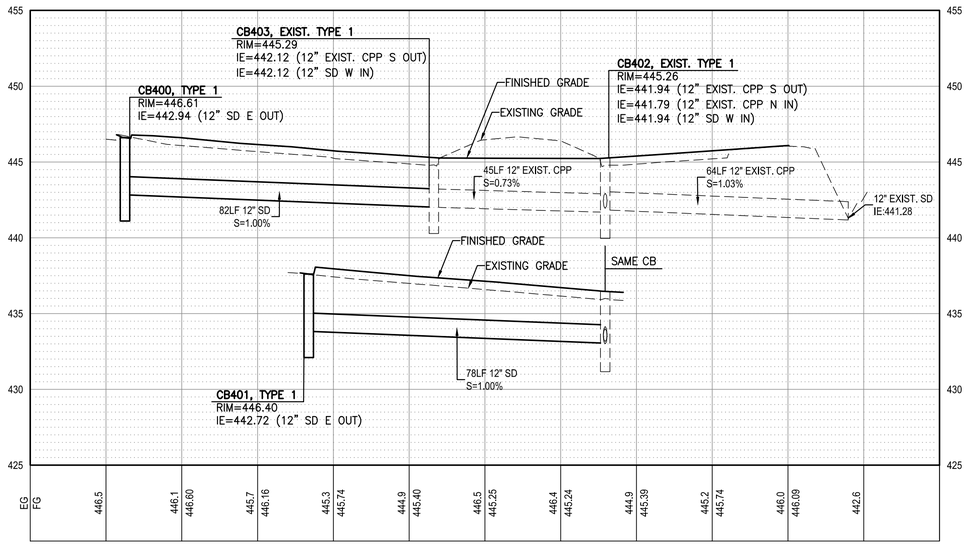

NOTES:
PIPE LENGTHS SHOWN IN PLAN AND PROFILE ARE MEASURED CENTER OF STRUCTURE TO CENTER OF STRUCTURE.

CB 400 TO CB 402 (EDMONDS COLLEGE DRAINAGE SYSTEM)

SEE DWG C4.300 FOR PLAN VIEW (APPROX. STA. 105+70 TO 107+00)

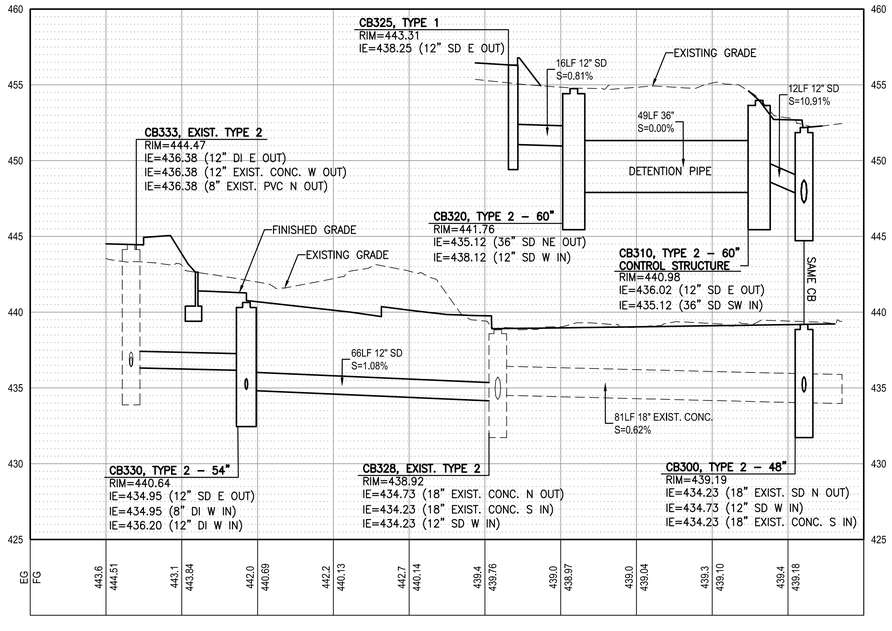

NOTES:
PIPE LENGTHS SHOWN IN PLAN AND PROFILE ARE MEASURED CENTER OF STRUCTURE TO CENTER OF STRUCTURE.

CB 333 TO CB 300 (EDMONDS COLLEGE DRAINAGE SYSTEM)

SEE DWG C4.301 FOR PLAN VIEW (APPROX. STA. 111+25 TO 112+20)

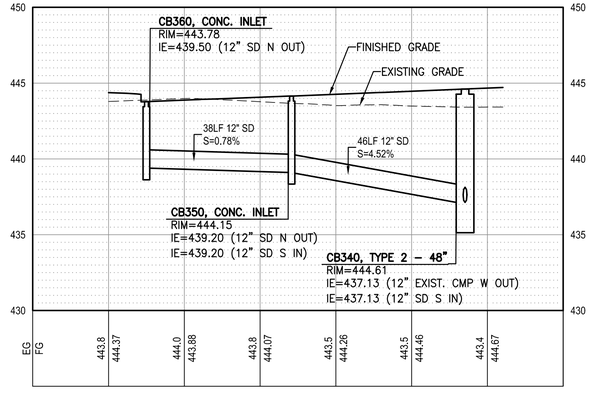

NOTES:
PIPE LENGTHS SHOWN IN PLAN AND PROFILE ARE MEASURED CENTER OF STRUCTURE TO CENTER OF STRUCTURE.

CB 360 TO CB 340 (EDMONDS COLLEGE DRAINAGE SYSTEM)

SEE DWG C4.301 FOR PLAN VIEW (APPROX. STA. 111+80 TO 112+20)

HORZ 20 0 20 40
VERT 5 0 5 10
SCALE IN FEET

CALL BEFORE YOU DIG 1–800–424–5555

NO.	REVISION COMMENTS	BY	REVIEW	DATE

DESIGNER | DRAWN BY | CHECKED BY

KEVIN C. KRAXBERGER — STATE OF WASHINGTON — 39870 — REGISTERED PROFESSIONAL ENGINEER
10/4/21

DYSON D. HOUNSEL — STATE OF WASHINGTON — 46957 — REGISTERED PROFESSIONAL ENGINEER
9/30/21

communitytransit

Swift ORANGE LINE – 100% SUBMITTAL

STORM DRAIN PROFILES
WESTERN TERMINUS-EDMONDS COLLEGE
(STATION # EB 3221 & WB 3222)

TITLE

Otak
11241 Willows Road NE, Suite 200
Redmond, WA 98052
425.822.4446
www.otak.com

32880.H
PROJECT NUMBER

C4.501
DRAWING NO.

SHEET 284 OF 622

© 2021 OTAK, INC.

Plotted: Oct 04, 2021 – 5:49pm K:\Project\32800\32880H\CADD\ACAD\Dwg\C4.500-C4.505.dwg Layout Name: C4.501

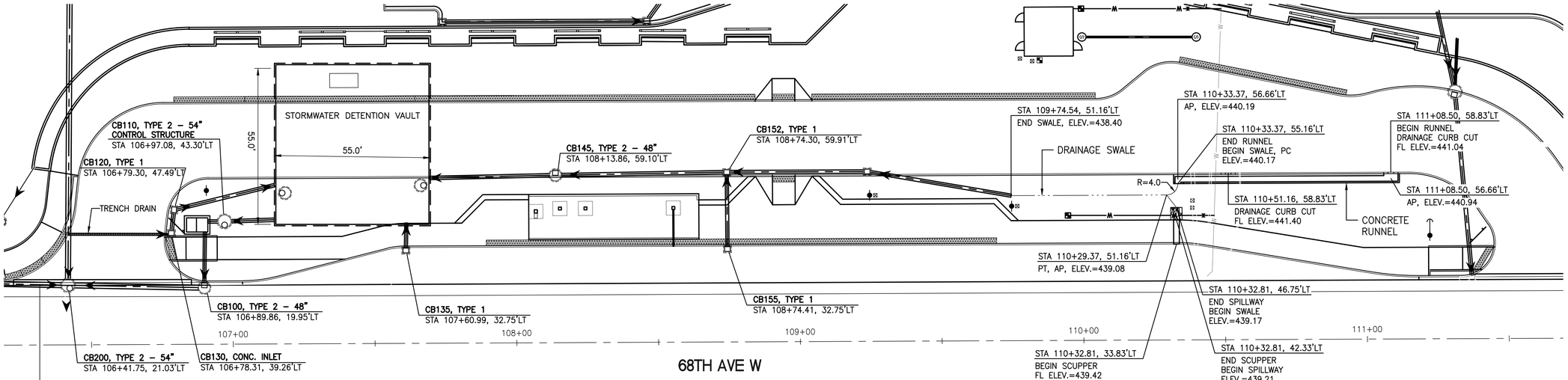

NOTES:

1. PIPE LENGTHS SHOWN IN PLAN AND PROFILE ARE MEASURED CENTER OF STRUCTURE TO CENTER OF STRUCTURE.

CB 200 TO CB 160 (EDMONDS COLLEGE DRAINAGE SYSTEM)

HORZ 20 0 20 40
VERT 5 0 5 10
SCALE IN FEET

CALL BEFORE YOU DIG 1–800–424–5555

NO.	REVISION COMMENTS	BY	REVIEW	DATE

DESIGNER

DRAWN BY

CHECKED BY

KEVIN C. KRAXBERGER
STATE OF WASHINGTON
39870
REGISTERED
PROFESSIONAL ENGINEER
10/15/21

JASON D. HOUNSELL
STATE OF WASHINGTON
46957
REGISTERED
PROFESSIONAL ENGINEER
10/15/21

TITLE

communitytransit
Swift ORANGE LINE – 100% SUBMITTAL
STORM DRAIN PROFILES
WESTERN TERMINUS-EDMONDS COLLEGE
(STATION # EB 3221 & WB 3222)

Otak
11241 Willows Road NE, Suite 200
Redmond, WA 98052
425.822.4446
www.otak.com

32880.H
PROJECT NUMBER

C4.502
DRAWING NO.

SHEET 285 OF 622

© 2021 OTAK, INC.

Plotted: Oct 15, 2021 – 9:45am K:\Project\32800\32880H\CADD\ACAD\Dwg\C4.500-C4.505.dwg Layout Name: C4.502

PDR-009731-2021

A PORTION OF THE NW 1/4 SECTION 20 T. 27N., R. 4E

27042000200100

Lynnwood Edmonds College Terminus

EDMONDS COLLEGE

27042000206800

PUGET SOUND POWER AND LIGHT EASEMENT

TEMPORARY CONSTRUCTION EASEMENT

TEMPORARY CONSTRUCTION EASEMENT

UTILITY EASEMENT

R/W EASEMENT

68TH AVE W

202ND ST SW

00515400000905

00395300200100

MATCHLINE SEE SHEET C3.301

CONSTRUCTION NOTES

1. CONSTRUCTION GRID LINE, SEE 100-SERIES SHEETS.
2. INSTALL BUS CURB BUMPER PER DETAILS ON SHEET C5.400.
3. INSTALL YELLOW CURB STRIPING.
4. INSTALL WHITE PROFILED PLASTIC WIDE (8") DOTTED EXTENSION LINE PER WSDOT STD PLAN M-20.10-03 AND M-20.20-02.
5. INSTALL WHITE PROFILED PLASTIC WIDE (8") EDGE LINE & SOLID LANE LINE PER WSDOT STD PLAN M-20.10-03 AND M-20.20-02.
6. INSTALL WHITE PLASTIC EDGE LINE PER WSDOT STD PLAN M-20.10-03.
7. INSTALL YIELD LINE SYMBOL PER WSDOT STD PLAN M-24.60-04.
8. INSTALL WHITE PLASTIC CROSSWALK OR STOP LINE PER WSDOT STD PLAN M-15.10-01.
9. INSTALL WHITE PLASTIC BUS ONLY STRIPING, SEE SHEET C5.401.
10. INSTALL YELLOW PLASTIC MEDIAN PER WSDOT STD M-3.40-04.
11. INSTALL BICYCLE LANE SYMBOL PER WSDOT STD PLAN M-9.50-02.
12. INSTALL PARKING STRIPING PER WSDOT STD PLAN M-17.10-02.
13. INSTALL TRAFFIC ARROW OR LETTER PER WSDOT STD PLAN M-24.20-02 OR M-80.30-00.
14. INSTALL WHITE PLASTIC WIDE (8") SOLID LANE LINE PER WSDOT STD PLAN M-20.10-03.
15. INSTALL 4" WHITE PAINT LINE.
16. INSTALL YELLOW PLASTIC EDGE LINE & SOLID LANE LINE PER WSDOT STD M-20.10-03.
17. INSTALL ORNAMENTAL PEDESTRIAN HANDRAIL PER SNOHOMISH COUNTY STD DETAIL 4-204.
18. INSTALL BLACK VINYL COATED CHAINLINK FENCE TYPE 4 PER WSDOT STD PLAN L-20.10-03.
19. INSTALL STATION RAILING. SEE A-SERIES SHEETS.
20. INSTALL PLASTIC ACCESSIBLE PARKING SYMBOL WITH BACKGROUND PER WSDOT STD PLAN M-17.10-02.
21. INSTALL YELLOW PLASTIC DOUBLE CENTERLINE PER WSDOT STD PLAN M-20.10-03.
22. CONSTRUCT ADA PARKING STALLS, SEE C3.6 SERIES PLANS FOR LAYOUT.
23. INSTALL WHITE PLASTIC CROSSWALK OR STOP LINE PER CITY OF MILL CREEK STD DETAIL STR-5.
24. INSTALL PRECAST CEMENT CONCRETE WHEEL STOP PER DETAIL ON SHEET C5.400.
25. INSTALL WHITE PLASTIC CROSSWALK OR STOP LINE PER SNOHOMISH COUNTY STD DETAILS 7-100 & 7-110.
26. RELOCATE EXISTING GATE PER PLAN.
27. INSTALL 12" MIN. HEIGHT YELLOW PAINTED "FIRE LANE NO PARKING" LETTERS AND 4" WIDE YELLOW FIRE LANE STRIPING.
28. INSTALL CROSSHATCH MARKING (4" WHITE LINE) PER WSDOT STD PLAN M-17.10-02.
29. INSTALL DOUBLE 25 FT. CHAIN LINK GATE PER WSDOT STD PLAN L-30.10-02.
30. RELOCATE EXISTING BALLOT DROP BOX PER PLAN.
31. INSTALL SPEED BUMP SYMBOL PER WSDOT STD PLAN M-24.60-04.

SIGNING NOTES

[#] RELOCATE EXISTING SIGN TO NEW LOCATION ON NEW POST. SEE SIGN SCHEDULE ON SHEET C5.404-C5.405.

[#] INSTALL NEW SIGN. SEE SIGN SCHEDULE ON SHEET C5.402.

[#] REMOVE SIGN. SEE SIGN SCHEDULE ON SHEET C5.406.

GENERAL NOTES

1. SIGNS SHALL BE INSTALLED PER WSDOT STD PLANS G-20.10-02 AND G-22.10-04.
2. ALL SIGNS SHALL BE INSTALLED TO FACE ONCOMING TRAFFIC (AS SHOWN) UNLESS OTHERWISE NOTED.
3. SEE WASHINGTON STATE "SIGN FABRICATION MANUAL" FOR CODE REFERENCES AND STANDARD SIGN LAYOUT DETAILS.

LEGEND

- EXISTING R/W
- R/W EASEMENT
- PROPERTY LINE
- PERMANENT EASEMENT
- UTILITY EASEMENT
- TCE — TEMPORARY CONSTRUCTION EASEMENT
- PEDESTRIAN HANDRAIL
- CHAINLINK FENCE
- GATE

20 0 20 40

SCALE IN FEET

CALL BEFORE YOU DIG 1-800-424-5555

NO.	REVISION COMMENTS	BY	REVIEW	DATE

DESIGNER

DRAWN BY

CHECKED BY

LU Submittal, Rev1 3/22/2022

KEVIN C. KRAKENBERGER — STATE OF WASHINGTON — 39870 — REGISTERED PROFESSIONAL ENGINEER

10/21/21

community transit

Swift ORANGE LINE – 100% SUBMITTAL

TERMINI SIGNING AND STRIPING PLANS

WESTERN TERMINUS-EDMONDS COLLEGE

(STATION # EB 3221 & WB 3222)

TITLE

Otak

11241 Willows Road NE, Suite 200
Redmond, WA 98052
425.822.4446
www.otak.com

32880.H
PROJECT NUMBER

C5.300
DRAWING NO.

SHEET 329 OF 622

© 2021 OTAK, INC.

Plotted: Oct 21, 2021 - 5:57pm K:\Project\32800\32880H\CADD\ACAD\Dwg\C5.300-C5.305.dwg Layout Name: C5.300

PDR-009-21-2021

A PORTION OF THE NW 1/4 SECTION 20 T. 27N., R. 4E

Lynnwood Extension | College Terminus

EDMONDS COLLEGE

27042000206800

01101000000100

00395300201000

00395300100100

00395300100400

PUGET SOUND POWER AND LIGHT EASEMENT

TEMPORARY CONSTRUCTION EASEMENT

4' AWWD EASEMENT

CONSTRUCTION ENTRANCE

68TH AVE W

201ST PL SW

200TH ST SW

CALL BOX

INFORMATION KIOSK 28

BUS ONLY

CROSSWALK AHEAD

NO PARKING

PARKING 28

BUS STOP 15

BUS STOP 16

MONUMENT SIGN 27

UTILITY EASEMENT

R/W EASEMENT

SPEED LIMIT 30 35

NO RIGHT TURNS EXCEPT TRANSIT 27

NO PARKING 22

NO PARKING 21

INFORMATION KIOSK 26

CROSSWALK AHEAD 17

STA 108+84.19, 159.04'LT 3 END

STA 109+11.44, 131.48'LT 3 END

STA 109+84.20, 136.09'LT 3 BEGIN

STA 109+69.44, 34.33'LT 2 END

STA 110+09.25, 174.87'LT 3 BEGIN

STA 110+41.09, 150.05'LT 3 END

STA 110+70.10, 144.15'LT 3 BEGIN

STA 110+95.92, 138.91'LT 3 END

STA 110+20.19, 26.43'LT 9 CENTER

STA 111+28.08, 138.65'LT 3 BEGIN

STA 111+59.15, 138.51'LT 3 END

STA 111+56.67, 113.54'LT 3 END

STA 111+87.23, 138.38'LT 3 BEGIN

STA 111+33.22, 16.83'LT 4 AP

STA 111+24.82, 19.33'LT 11

STA 111+18.22, 20.83'LT 4 END

STA 112+18.96, 155.36'LT 3 END

STA 112+16.86, 19.29'LT 11

STA 112+10.60, 16.79'LT 4 AP

STA 112+64.45, 16.83'LT 4 END

(TYP.) 22, 20, 12, 28, 24, 27, 15

HC 29, 30, 31, 32, 33, 34

16.0' (TYP.), 18.0' (TYP.), 17.5' (TYP.), 9.0', 9.5', 9.8', 13.0', 19.0', 20.0' MIN., 4.0', 5.0'

109+00, 110+00, 111+00, 112+00, 113+00

MATCHLINE SEE SHEET C3.300

CONSTRUCTION NOTES

1. CONSTRUCTION GRID LINE, SEE 100-SERIES SHEETS.
2. INSTALL BUS CURB BUMPER PER DETAILS ON SHEET C5.400.
3. INSTALL YELLOW CURB STRIPING.
4. INSTALL WHITE PROFILED PLASTIC WIDE (8") DOTTED EXTENSION LINE PER WSDOT STD PLAN M-20.10-03 AND M-20.20-02.
5. INSTALL WHITE PROFILED PLASTIC WIDE (8") EDGE LINE & SOLID LANE LINE PER WSDOT STD PLAN M-20.10-03 AND M-20.20-02.
6. INSTALL WHITE PLASTIC EDGE LINE PER WSDOT STD PLAN M-20.10-03.
7. INSTALL YIELD LINE SYMBOL PER WSDOT STD PLAN M-24.60-04.
8. INSTALL WHITE PLASTIC CROSSWALK OR STOP LINE PER WSDOT STD PLAN M-15.10-01.
9. INSTALL WHITE PLASTIC BUS ONLY STRIPING, SEE SHEET C5.401.
10. INSTALL YELLOW PLASTIC MEDIAN PER WSDOT STD M-3.40-04.
11. INSTALL BICYCLE LANE SYMBOL PER WSDOT STD PLAN M-9.50-02.
12. INSTALL PARKING STRIPING PER WSDOT STD PLAN M-17.10-02.
13. INSTALL TRAFFIC ARROW OR LETTER PER WSDOT STD PLAN M-24.20-02 OR M-80.30-00.
14. INSTALL WHITE PLASTIC WIDE (8") SOLID LANE LINE PER WSDOT STD PLAN M-20.10-03.
15. INSTALL 4" WHITE PAINT LINE.
16. INSTALL YELLOW PLASTIC EDGE LINE & SOLID LANE LINE PER WSDOT STD M-20.10-03.
17. INSTALL ORNAMENTAL PEDESTRIAN HANDRAIL PER SNOHOMISH COUNTY STD DETAIL 4-204.
18. INSTALL BLACK VINYL COATED CHAINLINK FENCE TYPE 4 PER WSDOT STD PLAN L-20.10-03.
19. INSTALL STATION RAILING. SEE A-SERIES SHEETS.
20. INSTALL PLASTIC ACCESSIBLE PARKING SYMBOL WITH BACKGROUND PER WSDOT STD PLAN M-17.10-02.
21. INSTALL YELLOW PLASTIC DOUBLE CENTERLINE PER WSDOT STD PLAN M-20.10-03.
22. CONSTRUCT ADA PARKING STALLS, SEE C3.6 SERIES PLANS FOR LAYOUT.
23. INSTALL WHITE PLASTIC CROSSWALK OR STOP LINE PER CITY OF MILL CREEK STD DETAIL STR-5.
24. INSTALL PRECAST CEMENT CONCRETE WHEEL STOP PER DETAIL ON SHEET C5.400.
25. INSTALL WHITE PLASTIC CROSSWALK OR STOP LINE PER SNOHOMISH COUNTY STD DETAILS 7-100 & 7-110.
26. RELOCATE EXISTING GATE PER PLAN.
27. INSTALL 12" MIN. HEIGHT YELLOW PAINTED "FIRE LANE NO PARKING" LETTERS AND 4" WIDE YELLOW FIRE LANE STRIPING.
28. INSTALL CROSSHATCH MARKING (4" WHITE LINE) PER WSDOT STD PLAN M-17.10-02.
29. INSTALL DOUBLE 25 FT. CHAIN LINK GATE PER WSDOT STD PLAN L-30.10-02.
30. RELOCATE EXISTING BALLOT DROP BOX PER PLAN.
31. INSTALL SPEED BUMP SYMBOL PER WSDOT STD PLAN M-24.60-04.

SIGNING NOTES

[#] RELOCATE EXISTING SIGN TO NEW LOCATION ON NEW POST. SEE SIGN SCHEDULE ON SHEET C5.404-C5.405.

(#) INSTALL NEW SIGN. SEE SIGN SCHEDULE ON SHEET C5.402.

<#> REMOVE SIGN. SEE SIGN SCHEDULE ON SHEET C5.406.

GENERAL NOTES

1. SIGNS SHALL BE INSTALLED PER WSDOT STD PLANS G-20.10-02 AND G-22.10-04.
2. ALL SIGNS SHALL BE INSTALLED TO FACE ONCOMING TRAFFIC (AS SHOWN) UNLESS OTHERWISE NOTED.
3. SEE WASHINGTON STATE "SIGN FABRICATION MANUAL" FOR CODE REFERENCES AND STANDARD SIGN LAYOUT DETAILS.

LEGEND

- EXISTING R/W
- R/W EASEMENT
- PROPERTY LINE
- PERMANENT EASEMENT
- UTILITY EASEMENT
- TCE — TEMPORARY CONSTRUCTION EASEMENT
- PEDESTRIAN HANDRAIL
- CHAINLINK FENCE
- GATE

20 0 20 40

SCALE IN FEET

CALL BEFORE YOU DIG 1-800-424-5555

NO.	REVISION COMMENTS	BY	REVIEW	DATE

DESIGNER | DRAWN BY | CHECKED BY

LDI Submittal, 3/22/2022

KEVIN C. KRAXBERGER, STATE OF WASHINGTON, 39870, REGISTERED PROFESSIONAL ENGINEER

11/2/21

TITLE

community transit

Swift ORANGE LINE – 100% SUBMITTAL

TERMINI SIGNING AND STRIPING PLANS

WESTERN TERMINUS-EDMONDS COLLEGE

(STATION # EB 3221 & WB 3222)

Otak

11241 Willows Road NE, Suite 200
Redmond, WA 98052
425.822.4446
www.otak.com

32880.H
PROJECT NUMBER

C5.301
DRAWING NO.

SHEET 330 OF 622

© 2021 OTAK, INC.

Plotted: Nov 03, 2021 - 9:17am K:\Project\32800\32880H\CADD\ACAD\Dwg\C5.300-C5.305.dwg Layout Name: C5.301

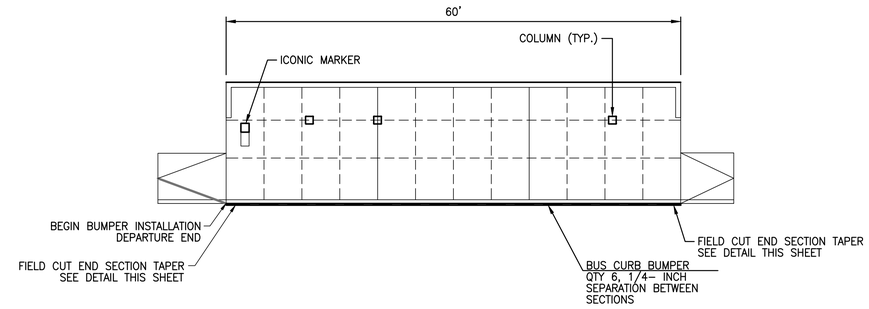

BUS CURB BUMPER

NOT TO SCALE

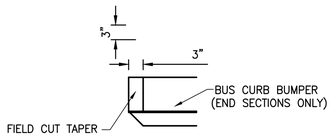

END SECTION TAPER DETAIL

NOT TO SCALE

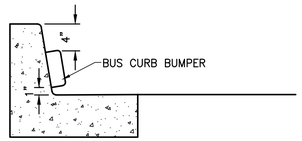

CURB BUMPER PLACEMENT DETAIL

NOT TO SCALE

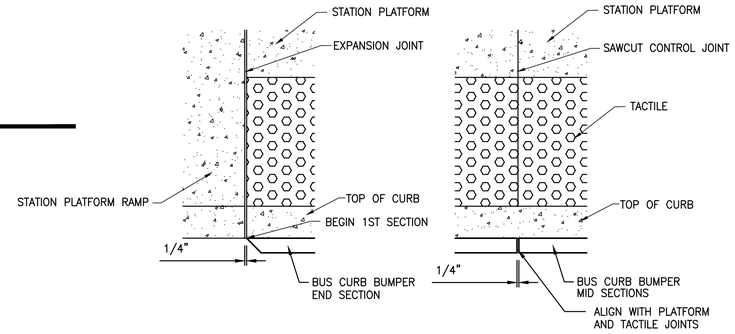

JOINT PLACEMENT DETAILS

NOT TO SCALE

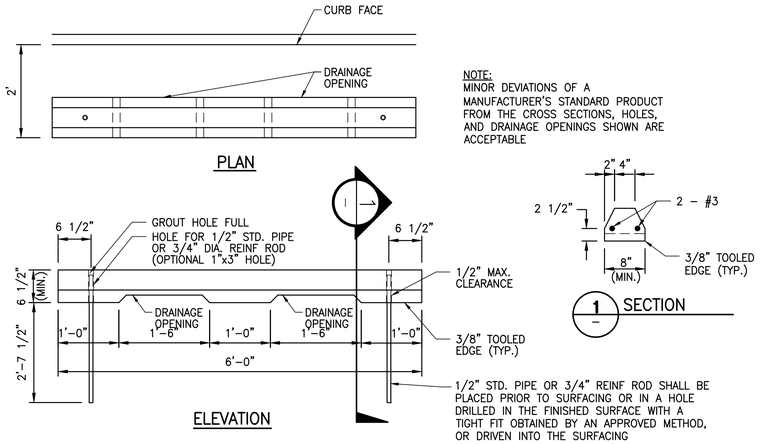

PRECAST CEMENT CONCRETE WHEEL STOP

NOT TO SCALE

NO.	REVISION COMMENTS	BY	REVIEW	DATE

DESIGNER

DRAWN BY

CHECKED BY

JEDIDIAH A. SHAPLEY
STATE OF WASHINGTON
40896
REGISTERED
PROFESSIONAL ENGINEER

9/24/21

communitytransit Swift ORANGE LINE – 100% SUBMITTAL

SIGNING AND STRIPING DETAILS

TITLE

Otak

11241 Willows Road NE, Suite 200
Redmond, WA 98052
425.822.4446
www.otak.com

32890.H
PROJECT NUMBER

C5.400
DRAWING NO.

SHEET 335 OF 622

© 2021 OTAK, INC.

CALL BEFORE YOU DIG 1–800–424–5555

Plotted: Sep 24, 2021 – 11:13am K:\Project\32800\32880H\CADD\ACAD\Dwg\C5.400-C5.401.dwg Layout Name: C5.400

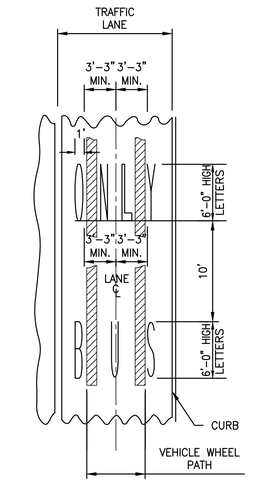

BUS ONLY STRIPING

NOT TO SCALE

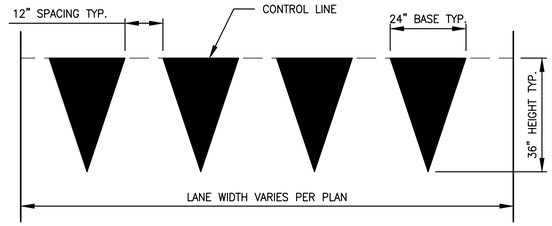

NOTES

1. TRIANGLE HEIGHT IS EQUAL TO 1.5 TIMES THE BASE DIMENSION.
2. THE CONTROL LINE SHALL BE PLACED 4 FEET FROM THE NEAREST EDGE OF THE PROPOSED CROSSWALK.

YIELD LINE LAYOUT

NOT TO SCALE

CALL BEFORE YOU DIG 1-800-424-5555

NO.	REVISION COMMENTS	BY	REVIEW	DATE

DESIGNER | DRAWN BY | CHECKED BY

JEDI A. SHAPLEY — STATE OF WASHINGTON — 40896 — REGISTERED PROFESSIONAL ENGINEER

9/24/21

communitytransit

Swift ORANGE LINE – 100% SUBMITTAL

SIGNING AND STRIPING DETAILS

TITLE

Otak

11241 Willows Road NE, Suite 200
Redmond, WA 98052
425.822.4446
www.otak.com

32890.H
PROJECT NUMBER

C5.401
DRAWING NO.

SHEET 336 OF 622

© 2021 OTAK, INC.

Plotted: Sep 24, 2021 - 11:13am K:\Project\32800\32880H\CADD\ACAD\Dwg\C5.400-C5.401.dwg Layout Name: C5.401

PROPOSED SIGN SCHEDULE

#	FINAL SIGN LOCATION			SIGN SIZE		SIGN TYPE																	
	STATION	OFFSET	CONSTRUCTION CENTERLINE	WIDTH	HEIGHT	R3-5R R1-10P (MOD.)	R3-5R	R4-4	R3-8A (MOD.)	R3-8A (MOD.)	R3-8A (MOD.)	R3-1	R10-6	W11-2 W16-7PL	R10-7	R3-1 R1-10P (MOD.)	R5-1 R1-10P (MOD.)	BUS STOP	INFORMATION KIOSK	MONUMENT SIGN	R7-801	R7-801A	SIGN DESCRIPTION
1	226+70.01	41.19'RT	SR524 – 196TH ST CCL	30"/24"	36"/18"	X																	RIGHT TURN ONLY, EXCEPT BUSES
2	80+91.37	38.70'RT	ASH WAY CCL	30"/24"	36"/18"	X																	RIGHT TURN ONLY, EXCEPT BUSES
3	72+19.70	50.35'LT	ASH WAY CCL	30"	36"		X																RIGHT TURN ONLY
4	73+78.58	38.16'LT	ASH WAY CCL	36"	30"			X															BEGIN RIGHT TURN LANE YIELD TO BIKE
5	15+99.62	35.14'LT	I-5 SB OFF-RAMP	48"	30"					X													DIRECTIONAL ARROW 2 LANES
6	14+31.62	43.77'LT	I-5 SB OFF-RAMP	48"	30"				X		X												DIRECTIONAL ARROW 4 LANES
7	105+13.02	23.51'RT	68TH AVE W CCL	24"	24"							X											NO RIGHT TURN
8	105+71.39	23.93'RT	68TH AVE W CCL															X					BUS STOP
9	105+82.28	24.04'RT	68TH AVE W CCL	24"	36"								X										STOP HERE ON RED
10	106+12.78	24.18'RT	68TH AVE W CCL	30"	30"									X									PED XING AHEAD
11	107+01.52	24.05'RT	68TH AVE W CCL	24"	36"								X										STOP HERE ON RED
12	107+09.67	88.80'LT	68TH AVE W CCL															X					BUS STOP
13	108+05.07	88.74'LT	68TH AVE W CCL															X					BUS STOP
14	106+85.49	88.87'LT	68TH AVE W CCL																X				INFORMATION KIOSK
15	109+25.11	88.88'LT	68TH AVE W CCL															X					BUS STOP
16	110+31.85	101.33'LT	68TH AVE W CCL															X					BUS STOP
17	1000+02.59	40.59'LT	MCCOLLUM PARK CCL	24"	30"										X								DO NOT BLOCK
18	1000+38.04	49.81'LT	MCCOLLUM PARK CCL	24"/24"	24"/18"											X							NO RIGHT TURN–TRANSIT ONLY
19 20	1000+53.88	27.48'LT	MCCOLLUM PARK CCL	30"/24"	30"/18"												X						DO NOT ENTER TRANSIT ONLY
21	14+29.29	8.52'RT	I-5 SB OFF-RAMP	48"	30"				X														DIRECTIONAL ARROW 4 LANES
22	9+04.80	40.67'RT	I-5 NB OFF-RAMP	48"	30"						X												DIRECTIONAL ARROW 3 LANES
23	9+04.80	9.45'LT	I-5 NB OFF-RAMP	48"	30"						X												DIRECTIONAL ARROW 3 LANES
24	884+19.56	57.96'RT	164TH ST CCL	30"/24"	36"/18"	X																	RIGHT TURN ONLY, EXCEPT BUSES
25	106+80.21	41.70'LT	68TH AVE W CCL																	X			MONUMENT SIGN
26	108+82.11	48.24'LT	68TH AVE W CCL																X				INFORMATION KIOSK
27	111+39.18	36.52'LT	68TH AVE W CCL																	X			MONUMENT SIGN
28	110+97.67	91.85'LT	68TH AVE W CCL																X				INFORMATION KIOSK
29	1000+62.21	58.69'LT	MCCOLLUM PARK CCL																	X			MONUMENT SIGN
30	1000+73.61	54.91'LT	MCCOLLUM PARK CCL																X				INFORMATION KIOSK
31	1005+96.26	131.56'RT	MCCOLLUM PARK CCL																	X			MONUMENT SIGN
32	1005+87.39	113.22'RT	MCCOLLUM PARK CCL																X				INFORMATION KIOSK
33	1006+52.07	34.22'RT	MCCOLLUM PARK CCL																X				INFORMATION KIOSK
34	81+95.73	45.85'RT	ASH WAY CCL																	X			MONUMENT SIGN
35	911+78.18	52.16'RT	164TH ST CCL	30"/24"	36"/18"	X																	RIGHT TURN ONLY, EXCEPT BUSES
36	107+02.16	27.62'LT	68TH AVE W CCL	30"	30"									X									PED XING AHEAD
37	1006+54.91	52.45'LT	MCCOLLUM PARK CCL	18"	12"																	X	VAN ACCESSIBLE PLAQUE
38	1006+71.24	53.14'LT	MCCOLLUM PARK CCL	18"	12"																	X	VAN ACCESSIBLE PLAQUE
39	1011+25.42	108.38'LT	MCCOLLUM PARK CCL	12"	18"																X		ADA PARKING
40	1011+25.42	108.38'LT	MCCOLLUM PARK CCL	18"	12"																	X	VAN ACCESSIBLE PLAQUE
41	1011+48.34	108.91'LT	MCCOLLUM PARK CCL	12"	18"																X		ADA PARKING
42	1011+48.34	108.91'LT	MCCOLLUM PARK CCL	18"	12"																	X	VAN ACCESSIBLE PLAQUE

CALL BEFORE YOU DIG 1–800–424–5555

NO.	REVISION COMMENTS	BY	REVIEW	DATE

DESIGNER

DRAWN BY

CHECKED BY



10/20/21

communitytransit

Swift ORANGE LINE – 100% SUBMITTAL

SIGNING AND STRIPING DETAILS

TITLE

Otak

11241 Willows Road NE, Suite 200
Redmond, WA 98052
425.822.4446
www.otak.com

32880.H
PROJECT NUMBER

C5.402
DRAWING NO.

SHEET 337 OF 622

© 2021 OTAK, INC.

Plotted: Oct 20, 2021 – 1:47pm C:\temp\AcPublish_21024\C5.402–C5.406.dwg Layout Name: C5.402

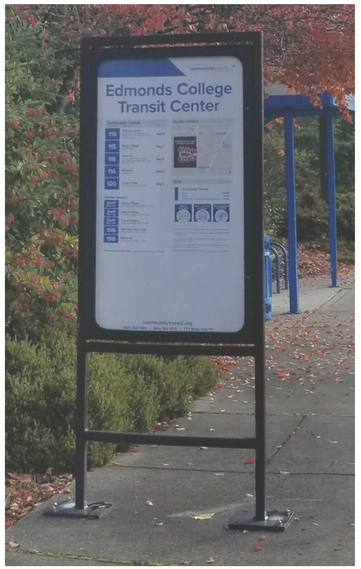

INFORMATION KIOSK

NOT TO SCALE



ELEVATION



ELEVATION



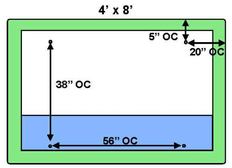

MOUNTING HOLE PLACEMENT

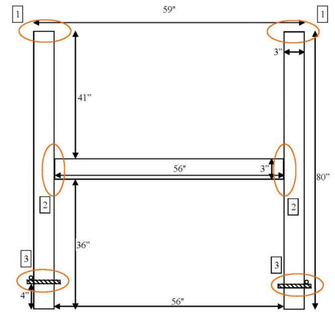

SCHEMATIC FOR 4 x 8 MONUMENT SIGN FRAME MATERIALS:
3" x 3" x 120 SQUARE STEEL TUBE
1/2" GR-40 REBAR

1. CAP AND SCAL WELD TOPS WITH CAP THICKNESS EQUAL TO OR GREATER THAN FRAME TUBE THICKNESS. CAPS MUST BE FLUSH AND SMOOTH WITH LEGS AND APPEAR AS A CONTINUOUS PIECE.
2. FILLET WELD ALL 4 SIDES OF EACH JOINT OF CROSS SECTION. WELD MUST BE 1/8" THICK OR EQUAL TO THICKNESS OF FRAME TUBE,
3. CENTER REBAR AND STITCH TO FRAME LEGS.

NOTE:
1. (2) 4X8 SIGN FACES SHALL READ 'EDMONDS COLLEGE TRANSIT CENTER'
2. (2) 4'X8' SIGN FACES SHALL READ 'MCCOLUM PARK TRANSIT CENTER'
3. ALL STEEL SHALL HAVE FLUORONAR COATING AND TNEUMEC COLORS PER COMMUNITY TRANSIT STANDARDS
4. SIGN COLORS SHALL BE PANTONE 300 BLUE FOR THE WORD "TRANSIT", AND PANTONE 362 GREEN FOR THE WORD "CENTER".

MONUMENT SIGN (EDMONDS COLLEGE / MCCOLLUM PARK TERMINUS / ASH WAY PARK AND RIDE)

NOT TO SCALE

CALL BEFORE YOU DIG 1-800-424-5555

NO.	REVISION COMMENTS	BY	REVIEW	DATE

DESIGNER

DRAWN BY

CHECKED BY

JEDIDIAH A. SHAPLEY
STATE OF WASHINGTON
40896
REGISTERED PROFESSIONAL ENGINEER

10/20/21

100% SUBMITTAL

communitytransit Swift ORANGE LINE

SIGNING AND STRIPING DETAILS

TITLE

Otak
11241 Willows Road NE, Suite 200
Redmond, WA 98052
425.822.4446
www.otak.com

32880.H
PROJECT NUMBER

C5.403
DRAWING NO.

SHEET 338 OF 622

© 2021 OTAK, INC.

Plotted: Oct 20, 2021 - 1:47pm C:\temp\AcPublish_21024\C5.402-C5.406.dwg Layout Name: C5.403

SIGN RELOCATION SCHEDULE

#	FINAL SIGN LOCATION STATION	FINAL SIGN LOCATION OFFSET	CONSTRUCTION CENTERLINE	EXISTING SIGN LOCATION STATION	EXISTING SIGN LOCATION OFFSET	SIGN TYPE: R3-5L	R2-1	R1-1	R3-5R		YIELD	HOV & BIKE LANE	W4-2	R3-17		R9-3	BUS STOP	ADOPT A ROAD	BICYCLE TO EXIT	ROUNDABOUT	SIGN DESCRIPTION
1	226+36.71	43.27'RT	SR524 – 196TH ST CCL	226+02.87	33.33'RT												X				BUS STOP
2	232+77.18	41.09'RT	SR524 – 196TH ST CCL	231+80.40	40.76'RT		X														SPEED LIMIT
3	229+12.79	94.52'LT	SR524 – 196TH ST CCL	229+12.17	91.81'LT						X										YIELD SIGN
4	517+89.57	28.31'LT	33RD AVE W CCL	518+23.89	27.28'LT												X				BUS STOP
5	717+56.94	38.59'RT	36TH AVE W CCL	714+80.62	40.07'RT												X				BUS STOP
6	814+08.92	53.11'RT	164TH ST CCL	813+28.57	40.86'RT													X			ADOPT A ROAD
7	815+68.60	47.90'RT	164TH ST CCL	815+68.58	47.90'RT												X				BUS STOP
8	816+02.01	41.16'RT	164TH ST CCL	815+57.35	43.11'RT														X		BICYCLE TO EXIT TO SIDEWALK AT BRIDGE
9	87+61.72	30.61'RT	ASH WAY CCL	87+02.87	27.78'RT															X	ROUNDABOUT 15 MPH
10	882+98.75	47.74'LT	164TH ST CCL	883+93.85	45.71'LT												X				BUS STOP
11	883+87.23	45.84'LT	164TH ST CCL	884+65.85	46.68'LT							X									HOV CURB LANE BICYCLE LANE
12	887+57.07	56.00'RT	164TH ST CCL	887+35.00	68.58'RT								X								RIGHT LANE ENDS
13	889+22.26	61.32'RT	164TH ST CCL	887+57.30	67.06'RT																BUS STOP
14	910+06.30	39.52'LT	164TH ST CCL	910+58.16	39.49'LT							X									HOV CURB LANE BICYCLE LANE
15	911+41.47	43.41'LT	164TH ST CCL	911+48.36	48.74'LT		X														SPEED LIMIT 35 MPH
16	914+67.43	51.99'RT	164TH ST CCL	914+26.72	46.48'RT		X														SPEED LIMIT 35 MHP
17	915+53.29	53.44'RT	164TH ST CCL	914+95.83	46.00'RT												X				BUS STOP
18	915+96.63	36.49'RT	164TH ST CCL	915+64.31	47.93'RT										X						HOV CURB LANE/BICYCLE LANE/CENTERLINE TURNS ONLY
19	947+95.58	47.77'LT	164TH ST CCL	949+28.76	30.39'LT												X				BUS STOP
20	73+39.22	38.12'LT	ASH WAY CCL	73+11.73	34.26'LT									X							BIKE LANE
21	855+99.61	64.10'LT	164TH ST CCL	856+03.76	64.44'LT	X															LEFT TURN ONLY LANE
22	856+06.36	47.43'LT	164TH ST CCL	856+09.92	37.23'LT					X											DO NOT ENTER ONE WAY
23	856+02.82	47.50'LT	164TH ST CCL	856+06.43	37.34'LT											X					NO CROSSWALK
24	863+78.36	42.11'RT	164TH ST CCL	863+78.11	39.55'RT											X					NO CROSSWALK

LYNNWOOD TRANSIT CENTER INFORMATION KIOSK SIGN

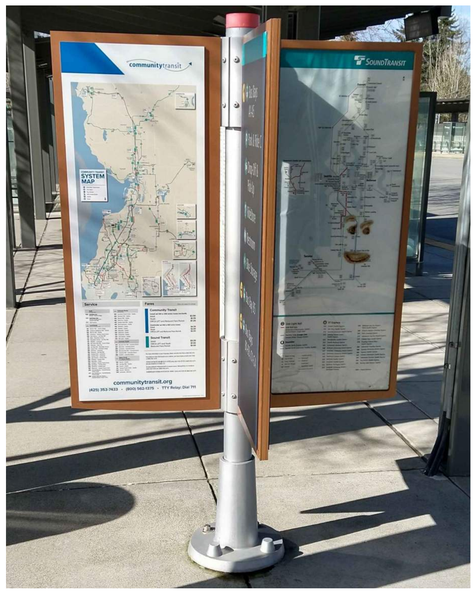

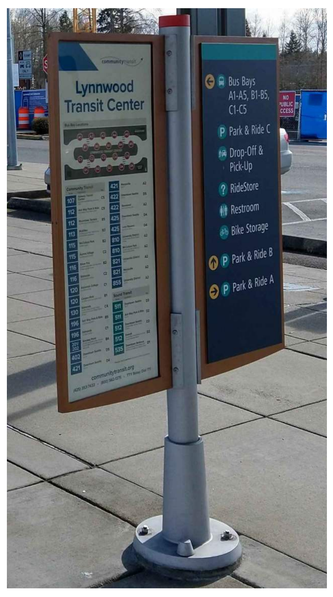

LYNNWOOD SIGN



CALL BEFORE YOU DIG 1-800-424-5555

NO.	REVISION COMMENTS	BY	REVIEW	DATE
1	1st Submittal, 100%			3/22/2022

DESIGNER

DRAWN BY

CHECKED BY

JEDI A. SHAPLEY
STATE OF WASHINGTON
40896
REGISTERED
PROFESSIONAL ENGINEER

10/20/21

community transit
Swift ORANGE LINE – 100% SUBMITTAL
SIGNING AND STRIPING DETAILS

TITLE

Otak
11241 Willows Road NE, Suite 200
Redmond, WA 98052
425.822.4446
www.otak.com

32880 H
PROJECT NUMBER

C5.404
DRAWING NO.

SHEET 339 OF 622

© 2021 OTAK, INC.

SIGN RELOCATION SCHEDULE

#	FINAL SIGN LOCATION			EXISTING SIGN LOCATION		R1-1	DO NOT ENTER WRONG WAY	R3-3 R3-1A	WRONG WAY	SPEED LIMIT	MOTORCYCLE PARKING ONLY	W11-2		SPEED LIMIT		PARKING	ADA PARKING	CT SIGN PARK AND RIDE	ENTERING FIRE DISTRICT 7	YIELD	BUS STOP	LYNNWOOD TC	MISCELLANEOUS	SIGN DESCRIPTION
	STATION	OFFSET	CONSTRUCTION CENTERLINE	STATION	OFFSET																			
25	106+43.22	47.75'LT	68TH AVE W CCL	106+24.23	43.40'LT	X																		STOP
26	106+87.14	25.84'LT	68TH AVE W CCL	106+57.52 106+91.65	42.75'LT 43.65'LT		X																	DO NOT ENTER WRONG WAY
27	112+32.14	23.44'LT	68TH AVE W CCL	108+21.40	24.12'LT			X																NO RIGHT TURNS EXCEPT TRANSIT
28	109+13.69	135.33'LT	68TH AVE W CCL	109+26.55	105.37'LT											X								PARKING
29	109+31.44	258.33'LT	68TH AVE W CCL	109+34.55	258.34'LT												X							ADA PARKING
30	109+31.44	244.33'LT	68TH AVE W CCL	109+35.91	243.94'LT												X							ADA PARKING
31	109+31.44	235.33'LT	68TH AVE W CCL	109+35.65	243.94'LT												X							ADA PARKING
32	109+31.44	221.33'LT	68TH AVE W CCL	109+35.26	212.38'LT												X							ADA PARKING
33	109+31.44	221.33'LT	68TH AVE W CCL	109+35.26	212.38'LT												X							ADA PARKING
34	109+31.41	195.31'LT	68TH AVE W CCL	109+35.99	199.17'LT												X							ADA PARKING
35	112+16.29	23.22'LT	68TH AVE W CCL	111+14.75	23.50'LT					X														SPEED LIMIT
36	1000+83.26	105.86'LT	MCCOLLUM PARK CCL	1000+75.24	121.75'LT	X																		STOP
37	1000+73.65	122.06'LT	MCCOLLUM PARK CCL	1000+80.23	113.33'LT													X						CT SIGN–PARK AND RIDE
38	1106+01.22	27.44'LT	DUMAS RD CCL	1106+25.59	28.58'LT														X					ENTERING FIRE DISTRICT 7
39	1107+11.52	63.56'LT	MCCOLLUM PARK CCL	1005+33.68	59.72'LT				X															WRONG WAY
40	1007+01.46	19.06'LT	MCCOLLUM PARK CCL	1005+88.53	16.86'RT						X													MOTORCYCLE PARKING ONLY
41	1007+03.85	11.10'RT	MCCOLLUM PARK CCL	1006+18.07	23.50'RT						X													MOTORCYCLE PARKING ONLY
42	1005+63.09	120.83'RT	MCCOLLUM PARK CCL	1005+65.14	121.72'RT																		X	DIGGING POSTING SIGNS PROHIBITED
43	1005+86.53	134.22'RT	MCCOLLUM PARK CCL	1005+86.10	138.75'RT															X				YIELD
44	1005+96.49	162.93'RT	MCCOLLUM PARK CCL	1005+87.93	164.84'RT							X												PEDESTRIAN CROSSING
47	1303+51.31	37.67'LT	PARK RD CCL	1303+31.61	34.30'RT							X												PEDESTRIAN CROSSING
48	711+12.89	36.40'LT	36TH AVE W CCL	711+15.77	36.70'LT																X			BUS STOP
49	1003+75.35	46.85'LT	MCCOLLUM PARK CCL	1001+92.98	46.60'LT												X							ADA PARKING
50	1003+89.89	47.05'LT	MCCOLLUM PARK CCL	1002+05.26	47.04'LT												X							ADA PARKING
51	1003+97.16	47.07'LT	MCCOLLUM PARK CCL	1002+18.41	47.49'LT												X							ADA PARKING
52	1004+15.53	47.03'LT	MCCOLLUM PARK CCL	1002+31.24	46.97'LT												X							ADA PARKING
53	1006+33.31	51.90'LT	MCCOLLUM PARK CCL	1002+43.24	46.80'LT												X							ADA PARKING
54	1006+46.72	51.77'LT	MCCOLLUM PARK CCL	1002+55.52	47.25'LT												X							ADA PARKING
55	1006+55.12	52.08'LT	MCCOLLUM PARK CCL	1002+68.67	47.69'LT												X							ADA PARKING
56	1006+71.67	52.93'LT	MCCOLLUM PARK CCL	1002+81.50	47.17'LT												X							ADA PARKING
57	1006+53.83	118.48'RT	MCCOLLUM PARK CCL	1006+51.45	119.56'RT																		X	DIGGING POSTING SIGNS PROHIBITED
58	810+60.65	35.56'LT	164TH ST CCL	811+70.54	35.98'LT								X											CURB LANE BIKE ONLY
59	810+04.65	35.56'LT	164TH ST CCL	810+60.89	35.62'LT									X										SPEED LIMIT
60	85+67.50	43.80'RT	ASH WAY CCL	85+75.34	39.94'RT										X									DO NOT ENTER – EXCEPT TRANSIT
61	85+67.50	43.80'RT	ASH WAY CCL	85+75.34	39.94'RT										X									
62	86+36.17	47.93'RT	ASH WAY CCL	86+32.45	38.66'RT										X									DO NOT ENTER – EXCEPT TRANSIT "MOUNTED ON NEW CHAINLINK FENCE"
63	86+36.17	47.93'RT	ASH WAY CCL	86+32.45	38.66'RT										X									
64	301+49.87	28.79'RT	LYNNWOOD TC CCL	301+36.78	30.89'RT																X			LYNNWOOD SIGN
65	301+42.13	30.72'RT	LYNNWOOD TC CCL	301+11.44	31.02'RT															X				BAY D5 BUS STOP
66	301+27.00	49.75'RT	LYNNWOOD TC CCL	301+26.72	40.90'RT																X			LYNNWOOD TC INFO KIOSK
67	301+01.18	49.86'RT	LYNNWOOD TC CCL	301+01.25	40.98'RT																X			LYNNWOOD TC INFO KIOSK
68	82+16.00	38.04'LT	ASH WAY CCL	82+14.63	38.07'LT											X								2 HOUR PARKING MON–FRI 8 AM–5 PM TOW AWAY ZONE
69	82+11.12	38.49'RT	ASH WAY CCL	82+11.71	24.07'RT																X			BUS STOP
70	1106+78.48	28.77'LT	DUMAS RD CCL	1106+84.40	30.62'LT					X														SPEED LIMIT
71	1000+57.42	51.18'LT	MCCOLLUM PARK CCL	1000+59.58	59.13'LT											X							X	PARKING & BALLOT DROP BOX
72	1000+57.42	51.18'LT	MCCOLLUM PARK CCL	1000+59.58	59.13'LT							X												PEDESTRIAN CROSSING
73	1006+30.13	127.38'RT	MCCOLLUM PARK CCL	1006+31.31	127.09'RT																		X	ENTERING CITY OF MILL CREEK

CALL BEFORE YOU DIG 1–800–424–5555

Plotted: Oct 20, 2021 – 1:47pm C:\temp\AcPublish_21024\C5.402-C5.406.dwg Layout Name: C5.405

NO.	REVISION COMMENTS	BY	REVIEW	DATE

DRAWN BY

CHECKED BY

DESIGNER

JEDI A. SHAPLEY
STATE OF WASHINGTON
40896
REGISTERED
PROFESSIONAL ENGINEER

10/20/21

communitytransit
Swift ORANGE LINE – 100% SUBMITTAL
SIGNING AND STRIPING DETAILS

TITLE

Otak
11241 Willows Road NE, Suite 200
Redmond, WA 98052
425.822.4446
www.otak.com

32880.H
PROJECT NUMBER

C5.405
DRAWING NO.

SHEET 340 OF 622

© 2021 OTAK, INC.

SIGN REMOVAL SCHEDULE			SIGN TYPE										
#	EXISTING SIGN LOCATION												
	STATION	OFFSET	CONSTRUCTION CENTERLINE	DIRECTIONAL ARROW	BUS STOP	NO PARKING	DO NOT ENTER EXCEPT TRANSIT	STOP SIGN	CROSSWALK AHEAD	INFO KIOSK	TRANSIT CENTER	BUS RIGHT TURN	SIGN DESCRIPTION
1	9+44.03	9.45'LT	I-5 NB OFF-RAMP	X									DIRECTIONAL ARROW
2	9+41.42	41.95'RT	I-5 NB OFF-RAMP	X									DIRECTIONAL ARROW
3	105+84.14	23.56'RT	68TH AVE W CCL			X							NO PARKING
4	1005+98.17	116.48'RT	MCCOLLUM PARK CCL				X						DO NOT ENTER EXCEPT TRANSIT
5	14+29.29	8.52'RT	I-5 SB OFF-RAMP	X									DIRECTIONAL ARROW
6	14+31.59	43.74'LT	I-5 SB OFF-RAMP	X									DIRECTIONAL ARROW
7	15+99.62	35.14'LT	I-5 SB OFF-RAMP	X									DIRECTIONAL ARROW
8	86+32.45	38.66'RT	ASH WAY CCL					X					STOP SIGN
9	81+95.02	39.34'RT	ASH WAY CCL										MONUMENT SIGN
10	105+95.63	190.61'LT	68TH AVE W CCL		X								BUS STOP, STOCKPILE FOR OWNER
11	106+09.54	132.65'LT	68TH AVE W CCL		X								BUS STOP, STOCKPILE FOR OWNER
12	106+24.36	63.83'LT	68TH AVE W CCL		X								BUS STOP, STOCKPILE FOR OWNER
13	107+06.65	125.79'LT	68TH AVE W CCL		X								BUS STOP, STOCKPILE FOR OWNER
14	107+21.49	183.38'LT	68TH AVE W CCL		X								BUS STOP, STOCKPILE FOR OWNER
15	107+35.78	196.58'LT	68TH AVE W CCL							X			INFO KIOSK, STOCKPILE FOR OWNER
16	107+37.52	254.77'LT	68TH AVE W CCL		X								BUS STOP, STOCKPILE FOR OWNER
17	109+75.60	24.03'LT	68TH AVE W CCL						X				CROSSWALK AHEAD
18	105+73.38	238.47'LT	68TH AVE W CCL							X			INFO KIOSK, STOCKPILE FOR OWNER
19	106+59.28	101.44'LT	68TH AVE W CCL			X							NO PARKING
20	106+55.67	101.13'LT	68TH AVE W CCL			X							NO PARKING
21	110+15.44	23.28'LT	68TH AVE W CCL			X							NO PARKING
22	112+40.11	23.56'LT	68TH AVE W CCL			X							NO PARKING
23	106+57.52	42.78'LT	68TH AVE W CCL								X		CT TRANSIT CENTER
24	1205+15.01	52.50'LT	SR 96-128TH ST SE CCL									X	DUMAS RD BUS RIGHT TURN

CALL BEFORE YOU DIG 1-800-424-5555

DESIGNER	DRAWN BY	CHECKED BY

NO.	REVISION COMMENTS	BY	REVIEW	DATE



10/20/21

communitytransit

Swift ORANGE LINE - 100% SUBMITTAL

SIGNING AND STRIPING DETAILS

TITLE

Otak

11241 Willows Road NE, Suite 200
Redmond, WA 98052
425.822.4446
www.otak.com

32880.H

PROJECT NUMBER

C5.406

DRAWING NO.

SHEET 341 OF 622

© 2021 OTAK, INC.

Plotted: Oct 20, 2021 - 1:48pm C:\temp\AcPublish_21024\C5.402-C5.406.dwg Layout Name: C5.406

PDR-009731-2021

Northwest Edmonds College Temporary

A PORTION OF THE NW 1/4 SECTION 20 T. 27N., R. 4E

PLANT SCHEDULE 6.300

TREES	QTY	BOTANICAL / COMMON NAME
	7	CORNUS KOUSA CHINENSIS / CHINESE DOGWOOD
	2	QUERCUS ROBUR X ALBA 'JFS-KW1QX' / STREET SPIRE OAK

SHRUBS	QTY	BOTANICAL / COMMON NAME
	3	ARBUTUS UNEDO 'COMPACTA' / DWARF STRAWBERRY TREE
	19	BERBERIS THUNBERGII 'CONCORDE' / CONCORDE JAPANESE BARBERRY
	30	CISTUS X AGUILARII 'MACULATUS' / ROCKROSE
	36	CLEMATIS ARMANDII / EVERGREEN CLEMATIS
	1,081	EPIMEDIUM X VERSICOLOR 'NEO-SULPHUREUM' / NEO-SULPHUREUM BARRENWORT
	61	ESCALLONIA X 'COMPACTA' / COMPACT ESCALLONIA
	27	JUNIPERUS HORIZONTALIS 'YOUNGSTOWN' / CREEPING JUNIPER
	215	LIRIOPE MUSCARI 'EMERALD GODDESS' / EMERALD GODDESS LILYTURF
	70	MAHONIA REPENS / CREEPING MAHONIA
	149	NANDINA DOMESTICA 'TUSCAN FLAME' / TUSCAN FLAME HEAVENLY BAMBOO
	34	POTENTILLA FRUTICOSA 'GOLD DROP' / GOLD DROP POTENTILLA
	29	SPIRAEA X BUMALDA 'GOLDFLAME' / GOLDFLAME SPIREA

GROUND COVERS	QTY	BOTANICAL / COMMON NAME
	7,354 SF	2" DEPTH BARK MULCH
	19,793 SF	EROSION CONTROL SEED MIX
	203 SF	4" DEPTH COMPACTED 3/4" OR 5/8" CLEAR CRUSHED ROCK

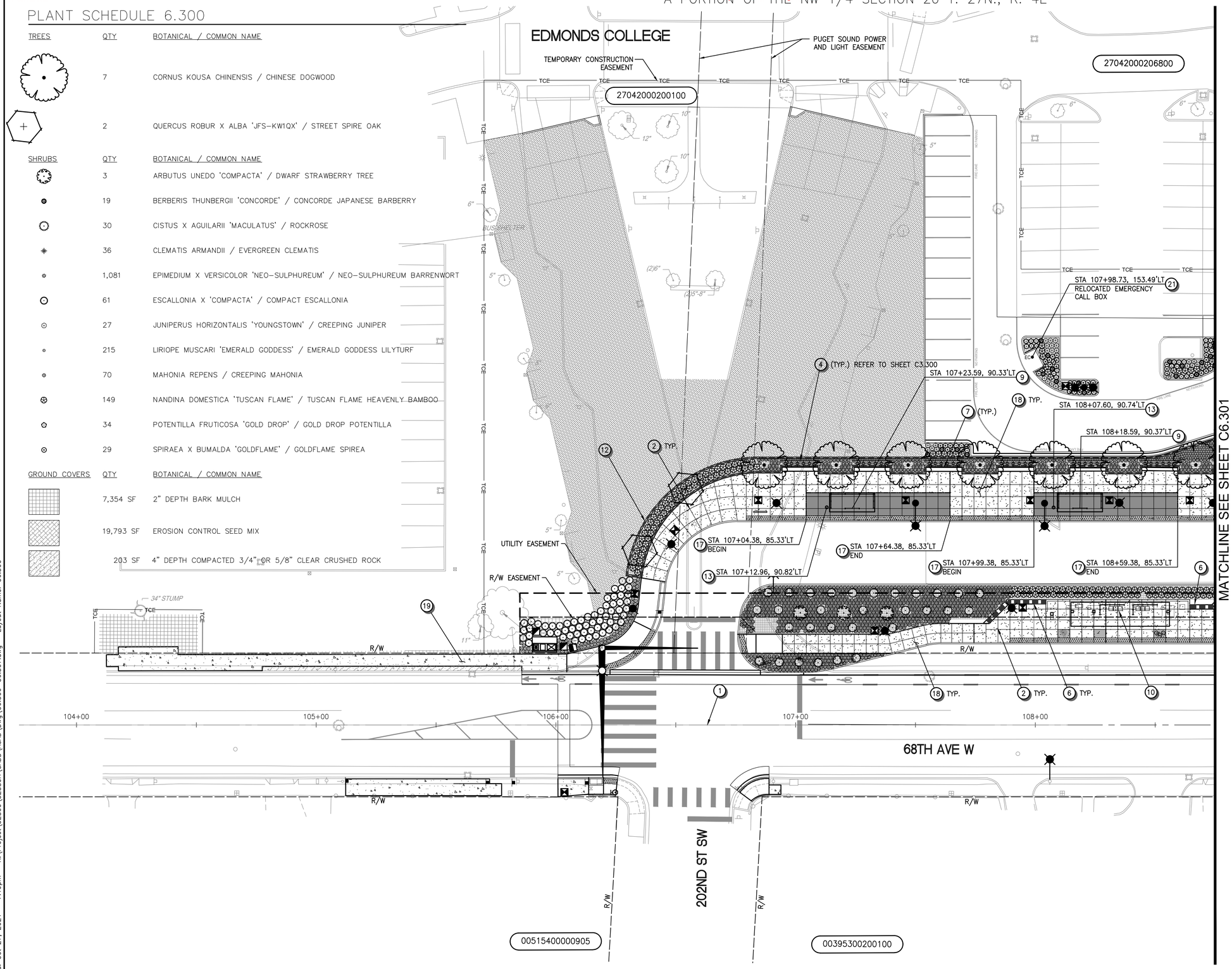

LANDSCAPE NOTES

1. CONSTRUCTION GRID LINE, SEE 100-SERIES SHEETS.
2. CONCRETE JOINTING, SEE SHEETS C3.310 TO C3.318.
3. BIKE RACK DETAIL, SEE SHEET C6.400.
4. GREENSCREEN VINE TRELLIS, SEE SHEET C6.400.
5. BIKE LOCKER, SEE SHEET C6.400.
6. TYPICAL SEAT WALL TYPE 1, SEE SHEET C6.402 & W-SERIES PLANS.
7. TYPICAL SECTION SEAT WALL TYPE 2, SEE W-SERIES PLANS.
8. NOT USED.
9. LOCAL BUS SHELTER, SEE SHEET C6.404.
10. SWIFT STATION, SEE A AND S-SERIES SHEETS.
11. DRIVER RESTROOM, SEE SHEET C6.405.
12. PLANTER WALL, SEE CONCRETE CUT & FILL WALLS, W-SERIES SHEETS.
13. TRASH RECEPTACLE, SEE SHEET C6.402.
14. NORTH CREEK TRAIL SIGN, SEE SHEET C6.403.
15. CONCRETE SCUPPER, SEE SHEET C4.411.
16. DRAINAGE SWALE, SEE SHEET C4.412.
17. EXPOSED AGGREGATE PLAZA PAVING, LIMITS PER PLAN.
18. SAND FINISH PLAZA PAVING, LIMITS AND AREA SHOWN AS TRANSIT CENTER PLATFORM ON C3-SERIES SHEETS.
19. MEDIUM BROOM FINISH SIDEWALK PAVING, LIMITS AND AREA SHOWN AS CEMENT CONCRETE SIDEWALK ON C3-SERIES SHEETS.
20. FREESTANDING RTPI SIGN, SEE SHEET C6.406.
21. BLUE LIGHT EMERGENCY TOWER, SEE SHEET C6.407.
22. CONCRETE RUNNEL, SEE SHEET C4.412.
23. RELOCATED BALLOT DROP BOX.

GENERAL NOTES

1. ALL TREE LOCATIONS ARE APPROXIMATE UNLESS STA/OFFSET ARE PROVIDED; IF FIELD ADJUSTMENTS ARE NECESSARY MOVE TREE TO ENSURE MINIMUM SETBACKS ARE MAINTAINED.
2. RESTORE ALL DISTURBED IRRIGATION SYSTEMS IN-KIND.
3. PLAN SHEET PLANTING SCHEDULES ARE FOR EACH PLAN SHEET ONLY. SEE SHEET C6.500 FOR ENTIRE PROJECT PLANTING SCHEDULE.
4. SEE SHEET C6.401 FOR PLANTING DETAILS AND SOIL PREPARATION DETAILS.
5. PROVIDE 5' MIN. DIAMETER MULCH RING AT EACH NEW TREE.

LEGEND

- EXISTING R/W
- R/W EASEMENT
- PROPERTY LINE
- PERMANENT EASEMENT
- UTILITY EASEMENT
- TCE — TEMPORARY CONSTRUCTION EASEMENT
- RETAINING WALL

20 0 20 40

SCALE IN FEET

CALL BEFORE YOU DIG 1-800-424-5555

NO.	REVISION COMMENTS	BY	REVIEW	DATE
1	1st Submittal.			3/22/2022

DESIGNER

DRAWN BY

CHECKED BY

STATE OF WASHINGTON · THOMAS LUKE ENTLER · 20198 · EXP. 07/08/2022 · LICENSED LANDSCAPE ARCHITECT

10/27/21

communitytransit

Swift ORANGE LINE - 100% SUBMITTAL

TERMINI LANDSCAPING & HARDSCAPING PLANS

WESTERN TERMINUS - EDMONDS COLLEGE

(STATION # EB 3221 & WB 3222)

TITLE

Otak

11241 Willows Road NE, Suite 200
Redmond, WA 98052
425.822.4446
www.otak.com

32880.H
PROJECT NUMBER

C6.300
DRAWING NO.

SHEET 378 OF 622

© 2021 OTAK, INC.

Plotted: Oct 27, 2021 - 7:19pm K:\Project\32800\32880H\CADD\ACAD\Dwg\C6.300-C6.307.dwg Layout Name: C6.300

PDR-009731-2021

PLANT SCHEDULE 6.301

Lynnwood Edmonds College Terminus

TREES	QTY	BOTANICAL / COMMON NAME	CONT	CAL	SIZE
	5	CORNUS KOUSA CHINENSIS / CHINESE DOGWOOD	B&B	2"	8'–12'
	15	QUERCUS ROBUR X ALBA 'JFS–KW1QX' / STREET SPIRE OAK	B&B	2"	8'–12'

SHRUBS	QTY	BOTANICAL / COMMON NAME	CONT
	8	ARBUTUS UNEDO 'COMPACTA' / DWARF STRAWBERRY TREE	5 GAL
	86	BERBERIS THUNBERGII 'CONCORDE' / CONCORDE JAPANESE BARBERRY	1 GAL
	56	CISTUS X AGUILARII 'MACULATUS' / ROCKROSE	2 GAL
	30	CLEMATIS ARMANDII / EVERGREEN CLEMATIS	1 GAL.
	37	CORNUS STOLONIFERA 'FARROW' / ARCTIC FIRE DOGWOOD	1 GAL.
	1,191	EPIMEDIUM X VERSICOLOR 'NEO–SULPHUREUM' / NEO–SULPHUREUM BARRENWORT	1 GAL
	381	ESCALLONIA X 'COMPACTA' / COMPACT ESCALLONIA	2 GAL
	133	JUNCUS INFLEXUS 'BLUE ARROWS' / BLUE ARROWS JUNCUS	1 GAL.
	152	JUNIPERUS HORIZONTALIS 'YOUNGSTOWN' / CREEPING JUNIPER	1 GAL.
	2,681	LIRIOPE MUSCARI 'EMERALD GODDESS' / EMERALD GODDESS LILYTURF	1 GAL.
	315	NANDINA DOMESTICA 'TUSCAN FLAME' / TUSCAN FLAME HEAVENLY BAMBOO	2 GAL
	65	POLYSTICHUM MUNITUM / WESTERN SWORD FERN	1 GAL.
	79	POTENTILLA FRUTICOSA 'GOLD DROP' / GOLD DROP POTENTILLA	2 GAL
	153	SPIRAEA X BUMALDA 'GOLDFLAME' / GOLDFLAME SPIREA	2 GAL

GROUND COVERS	QTY	BOTANICAL / COMMON NAME	CONT
	13,950 SF	2" DEPTH BARK MULCH	N/A

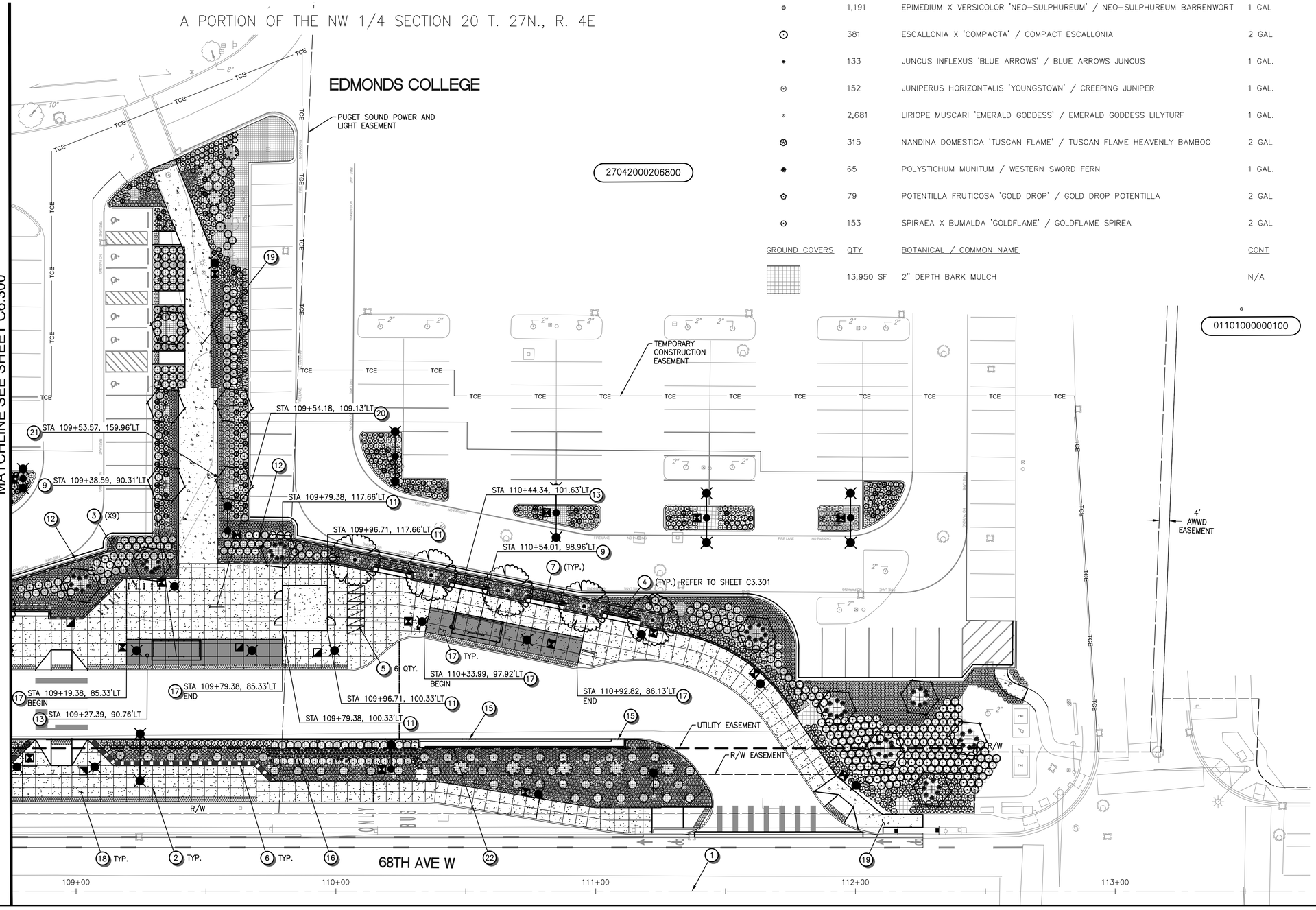

LANDSCAPE NOTES

1. CONSTRUCTION GRID LINE, SEE 100–SERIES SHEETS.
2. CONCRETE JOINTING, SEE SHEETS C3.310 TO C3.318.
3. BIKE RACK DETAIL, SEE SHEET C6.400.
4. GREENSCREEN VINE TRELLIS, SEE SHEET C6.400.
5. BIKE LOCKER, SEE SHEET C6.400.
6. TYPICAL SEAT WALL TYPE 1, SEE SHEET C6.402 & W–SERIES PLANS.
7. TYPICAL SECTION SEAT WALL TYPE 2, SEE W–SERIES PLANS.
8. NOT USED.
9. LOCAL BUS SHELTER, SEE SHEET C6.404.
10. SWIFT STATION, SEE A AND S–SERIES SHEETS.
11. DRIVER RESTROOM, SEE SHEET C6.405.
12. PLANTER WALL, SEE CONCRETE CUT & FILL WALLS, W–SERIES SHEETS.
13. TRASH RECEPTACLE, SEE SHEET C6.402.
14. NORTH CREEK TRAIL SIGN, SEE SHEET C6.403.
15. CONCRETE SCUPPER, SEE SHEET C4.411.
16. DRAINAGE SWALE, SEE SHEET C4.412.
17. EXPOSED AGGREGATE PLAZA PAVING, LIMITS PER PLAN.
18. SAND FINISH PLAZA PAVING. LIMITS AND AREA SHOWN AS TRANSIT CENTER PLATFORM ON C3–SERIES SHEETS.
19. MEDIUM BROOM FINISH SIDEWALK PAVING. LIMITS AND AREA SHOWN AS CEMENT CONCRETE SIDEWALK ON C3–SERIES SHEETS.
20. FREESTANDING RTPI SIGN, SEE SHEET C6.406.
21. BLUE LIGHT EMERGENCY TOWER, SEE SHEET C6.407.
22. CONCRETE RUNNEL, SEE SHEET C4.412.
23. RELOCATED BALLOT DROP BOX.

GENERAL NOTES

1. ALL TREE LOCATIONS ARE APPROXIMATE UNLESS STA/OFFSET ARE PROVIDED; IF FIELD ADJUSTMENTS ARE NECESSARY MOVE TREE TO ENSURE MINIMUM SETBACKS ARE MAINTAINED.
2. RESTORE ALL DISTURBED IRRIGATION SYSTEMS IN–KIND.
3. PLAN SHEET PLANTING SCHEDULES ARE FOR EACH PLAN SHEET ONLY. SEE SHEET C6.500 FOR ENTIRE PROJECT PLANTING SCHEDULE.
4. SEE SHEET C6.401 FOR PLANTING DETAILS AND SOIL PREPARATION DETAILS.
5. PROVIDE 5' MIN. DIAMETER MULCH RING AT EACH NEW TREE.

LEGEND

- EXISTING R/W
- R/W EASEMENT
- PROPERTY LINE
- PERMANENT EASEMENT
- UTILITY EASEMENT
- TCE — TEMPORARY CONSTRUCTION EASEMENT
- RETAINING WALL

20 0 20 40
SCALE IN FEET

CALL BEFORE YOU DIG 1–800–424–5555

NO.	REVISION COMMENTS	BY	REVIEW	DATE
	LU Submittal, #22-3/22/2022			

DESIGNER | DRAWN BY | CHECKED BY

STATE OF WASHINGTON · THOMAS LUKE ENTLER · 20198 · EXP. 07/08/2022 · LICENSED LANDSCAPE ARCHITECT
11/2/21

community transit
Swift ORANGE LINE – 100% SUBMITTAL
TERMINI LANDSCAPING & HARDSCAPING PLANS
WESTERN TERMINUS - EDMONDS COLLEGE
(STATION # EB 3221 & WB 3222)

TITLE

Otak
11241 Willows Road NE, Suite 200
Redmond, WA 98052
425.822.4446
www.otak.com

32880.H
PROJECT NUMBER

C6.301
DRAWING NO.

SHEET 379 OF 622

© 2021 OTAK, INC.

Plotted: Nov 03, 2021 – 11:10am K:\Project\32800\32880H\CADD\ACAD\Dwg\C6.300–C6.307.dwg Layout Name: C6.301

PDR-009731-2021

A PORTION OF THE NW 1/4 SECTION 20 T. 27N., R. 4E

Lynnwood Extension College Terminus

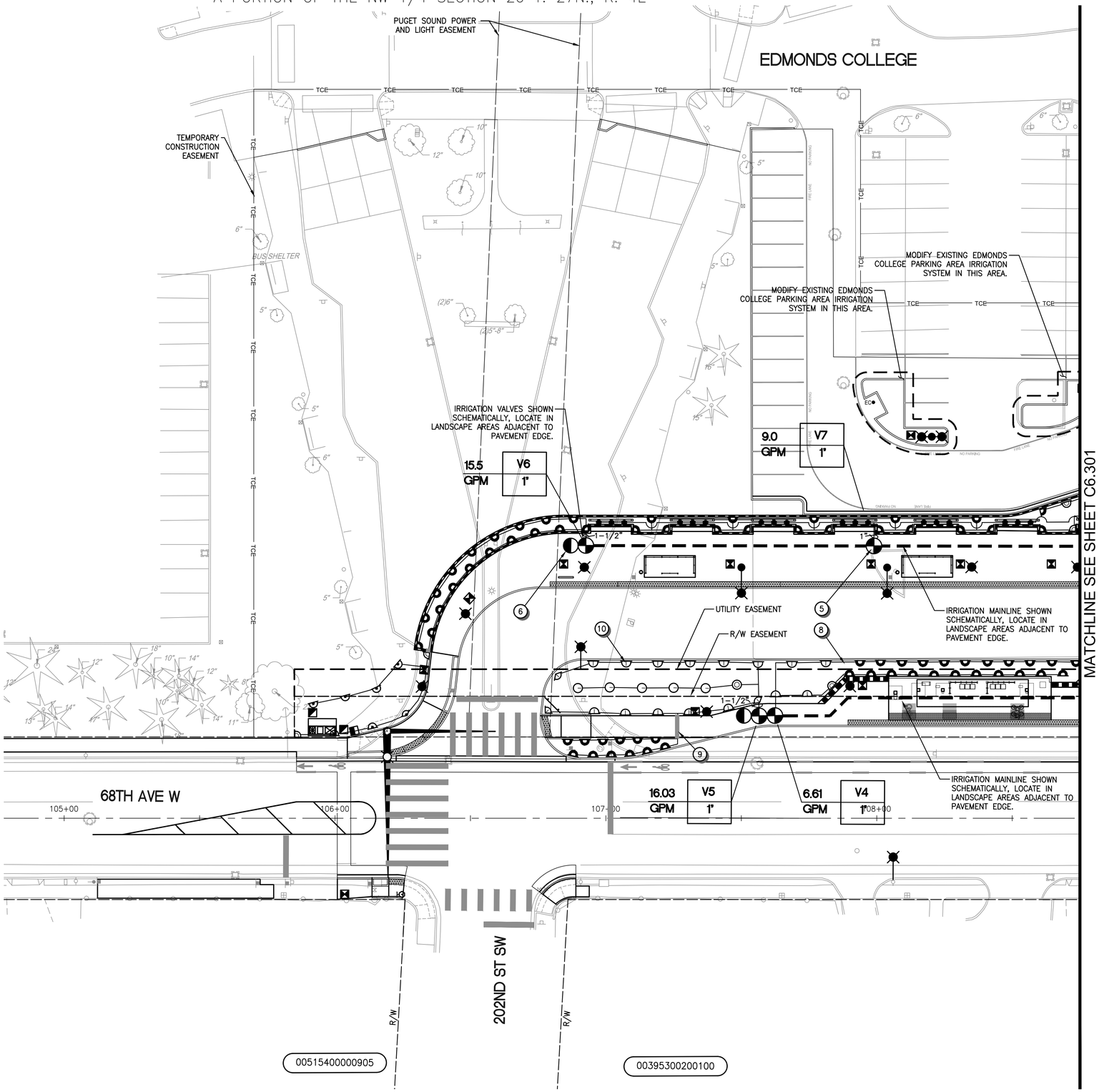

IRRIGATION NOTES

1. POINT OF CONNECTION SCHEMATIC, SEE DETAIL 1, SHEET C6.502
2. DOUBLE CHECK VALVE ASSEMBLY, CITY OF LYNNWOOD PUBLIC WORKS DEPARTMENT STANDARD DETAIL 5-12A
3. MASTER VALVE / FLOW SENSOR, SEE DETAIL 2, SHEET C6.502
4. WALL MOUNT IRRIGATION CONTROLLER & WIRING, SEE DETAIL 3, SHEET C6.502
5. CONTROL VALVE ASSEMBLY, SEE DETAIL 1, SHEET C6.503
6. QUICK COUPLER, SEE DETAIL 2, SHEET C6.503
7. BALL VALVE, SEE DETAIL 3, SHEET C6.503
8. TYPICAL TRENCHING IN LANDSCAPE, SEE DETAIL 3, SHEET C6.503
9. TYPICAL TRENCHING UNDER PAVEMENT, SEE DETAIL 4, SHEET C6.503
10. POP-UP HEAD, SEE DETAIL 6, SHEET C6.503
11. MANUAL DRAIN VALVE, SEE DETAIL 7 SHEET C6.503
12. PVC ADAPTER ASSEMBLY, SEE DETAIL 8, SHEET C6.503

LEGEND

EXISTING STATIC PRESSURE REPORTED AT SITE: ## PS1

SYSTEM DESIGN PRESSURE: 30-40 PS1

- Q TH H F — RAIN BIRD 1800 – MPR SPRAY NOZZLES 5-SERIES 6" POP-UP SPRAY HEADS
- Q TH H F — RAIN BIRD 1800 – MPR SPRAY NOZZLES 8-SERIES 6" POP-UP SPRAY HEADS
- Q TH H F — RAIN BIRD 1800 – MPR SPRAY NOZZLES 10-SERIES 6" POP-UP SPRAY HEADS
- Q TH H F — RAIN BIRD 1800 – MPR SPRAY NOZZLES 12-SERIES 6" POP-UP SPRAY HEADS
- Q TH H F — RAIN BIRD 1800 – MPR SPRAY NOZZLES 15-SERIES 6" POP-UP SPRAY HEADS
- Q TH H F — RAIN BIRD 1800 – R-VAN SERIES 17'-24' R-VAN-ADJ. ROTARY HEADS 12" POP-UP ROTARY HEAD
- RAIN BIRD 1800 5 CST-B STREAM BUBBLER 6" POP-UP HEAD
- POC — POINT OF CONNECTION: 1-1/2" WATER METER: – CITY OF EVERETT PUBLIC WORKS DEPARTMENT STANDARD DETAIL 502; DOUBLE CHECK VALVE ASSEMBLY: – FEBCO MODEL 850 (1-1/2") – CITY OF EVERETT PUBLIC WORKS DEPARTMENT STANDARD DETAIL 520; MASTER VALVE: – BUCKNER/SUPERIOR MODEL 3100150 (NORMALLY OPEN); RAIN BIRD FLOW SENSOR: – MODEL FS150B
- D — MANUAL DRAIN VALVE: CHAMPION 100RS-150Y (1-1/2"
- ISOLATION BALL VALVE: 1-1/2" (PVC)
- RAIN BIRD PEB CONTROL VALVE ASSEMBLY
- RAIN BIRD LOW FLOW CONTROL ZONE KIT WITH PR FILTER
- RAIN BIRD 44-LRC QUICK COUPLER ASSEMBLY
- IRRIGATION CONTROLLER: (WALL MOUNT) WITH RAIN SENSOR – RAIN BIRD ESP-LXME – 24 STATIONS
- SCHEDULE 40 IRRIGATION SLEEVING
- SCHEDULE 40 MAINLINE
- SCHEDULE 40 LATERAL LINES

CONTROL VALVE FLAG

12.5 G.P.M. | V1 | 1"

- G.P.M.
- CONTROLLER DESIGNATION AND VALVE NUMBER
- VALVE SIZE

20 0 20 40

SCALE IN FEET

CALL BEFORE YOU DIG 1-800-424-5555

NO.	REVISION COMMENTS	BY	REVIEW	DATE

DESIGNER | DRAWN BY | CHECKED BY

1st Submittal, 3/22/2022

STATE OF WASHINGTON · MARK G. SHEETS · 20 898 · EXP. 08/23/2022 · LICENSED LANDSCAPE ARCHITECT

10/13/21

communitytransit
Swift ORANGE LINE - 100% SUBMITTAL
TERMINI IRRIGATION PLANS
WESTERN TERMINUS - EDMONDS COLLEGE
(STATION # EB 3221 & WB 3222)

TITLE

Otak
11241 Willows Road NE, Suite 200
Redmond, WA 98052
425.822.4446
www.otak.com

32880 H
PROJECT NUMBER

C6.310
DRAWING NO.

SHEET 386 OF 622

© 2021 OTAK, INC.

Plotted: Oct 13, 2021 - 11:31am C:\temp\AcPublish_3404\C6.310-C6.315.dwg Layout Name: C6.310

PDR-009731-2021

A PORTION OF THE NW 1/4 SECTION 20 T. 27N., R. 4E

Lynnwood Campus, College Terminus

EDMONDS COLLEGE

PUGET SOUND POWER AND LIGHT EASEMENT

27042000206800

MODIFY EXISTING EDMONDS COLLEGE PARKING AREA IRRIGATION SYSTEM IN THIS AREA.

TEMPORARY CONSTRUCTION EASEMENT

MODIFY EXISTING EDMONDS COLLEGE PARKING AREA IRRIGATION SYSTEM IN THIS AREA.

MODIFY EXISTING EDMONDS COLLEGE PARKING AREA IRRIGATION SYSTEM IN THIS AREA.

01101000000100

4' AWWD EASEMENT

MATCHLINE SEE SHEET C6.300

MATCHLINE SEE SHEET C6.310

10.4 GPM V8 1"

6.7 GPM V9 1"

6.0 GPM V10 1"

17.33 GPM V11 1"

12.54 GPM V1 1"

18.6 GPM V12 1"

17.12 GPM V2 1"

13.61 GPM V3 1"

20.0 GPM MV 1"

POC

UTILITY EASEMENT

R/W EASEMENT

IRRIGATION MAINLINE SHOWN SCHEMATICALLY, LOCATE IN LANDSCAPE AREAS ADJACENT TO PAVEMENT EDGE.

IRRIGATION VALVES SHOWN SCHEMATICALLY, LOCATE IN LANDSCAPE AREAS ADJACENT TO PAVEMENT EDGE.

IRRIGATION POINT OF CONNECTION SHOWN SCHEMATICALLY, LOCATE IN LANDSCAPE AREA ADJACENT TO PAVEMENT EDGE.

CONSTRUCTION GRIDLINE

68TH AVE W

201ST PL SW

200TH ST SW

109+00 110+00 111+00 112+00 113+00

R/W

TCE

FIRE LANE

NO PARKING

IRRIGATION NOTES

1. POINT OF CONNECTION SCHEMATIC, SEE DETAIL 1, SHEET C6.502
2. DOUBLE CHECK VALVE ASSEMBLY, CITY OF LYNNWOOD PUBLIC WORKS DEPARTMENT STANDARD DETAIL 5-12A
3. MASTER VALVE / FLOW SENSOR, SEE DETAIL 2, SHEET C6.502
4. WALL MOUNT IRRIGATION CONTROLLER & WIRING, SEE DETAIL 3, SHEET C6.502
5. CONTROL VALVE ASSEMBLY, SEE DETAIL 1, SHEET C6.503
6. QUICK COUPLER, SEE DETAIL 2, SHEET C6.503
7. BALL VALVE, SEE DETAIL 3, SHEET C6.503
8. TYPICAL TRENCHING IN LANDSCAPE, SEE DETAIL 3, SHEET C6.503
9. TYPICAL TRENCHING UNDER PAVEMENT, SEE DETAIL 4, SHEET C6.503
10. POP-UP HEAD, SEE DETAIL 6, SHEET C6.503
11. MANUAL DRAIN VALVE, SEE DETAIL 7 SHEET C6.503
12. PVC ADAPTER ASSEMBLY, SEE DETAIL 8, SHEET C6.503

LEGEND

EXISTING STATIC PRESSURE REPORTED AT SITE: ## PS1

SYSTEM DESIGN PRESSURE: 30-40 PS1

- Q TH H F — RAIN BIRD 1800 – MPR SPRAY NOZZLES 5-SERIES 6" POP-UP SPRAY HEADS
- Q TH H F — RAIN BIRD 1800 – MPR SPRAY NOZZLES 8-SERIES 6" POP-UP SPRAY HEADS
- Q TH H F — RAIN BIRD 1800 – MPR SPRAY NOZZLES 10-SERIES 6" POP-UP SPRAY HEADS
- Q TH H F — RAIN BIRD 1800 – MPR SPRAY NOZZLES 12-SERIES 6" POP-UP SPRAY HEADS
- Q TH H F — RAIN BIRD 1800 – MPR SPRAY NOZZLES 15-SERIES 6" POP-UP SPRAY HEADS
- Q TH H F — RAIN BIRD 1800 – R-VAN SERIES 17'-24' R-VAN-ADJ. ROTARY HEADS 12" POP-UP ROTARY HEAD
- RAIN BIRD 1800 5 CST-B STREAM BUBBLER 6" POP-UP HEAD
- POC — POINT OF CONNECTION: 1-1/2" WATER METER: – CITY OF EVERETT PUBLIC WORKS DEPARTMENT STANDARD DETAIL 502; DOUBLE CHECK VALVE ASSEMBLY: – FEBCO MODEL 850 (1-1/2") – CITY OF EVERETT PUBLIC WORKS DEPARTMENT STANDARD DETAIL 520; MASTER VALVE: – BUCKNER/SUPERIOR MODEL 3100150 (NORMALLY OPEN) RAIN BIRD FLOW SENSOR: – MODEL FS150B
- D — MANUAL DRAIN VALVE: CHAMPION 100RS-150Y (1-1/2"
- ISOLATION BALL VALVE: 1-1/2" (PVC)
- RAIN BIRD PEB CONTROL VALVE ASSEMBLY
- RAIN BIRD LOW FLOW CONTROL ZONE KIT WITH PR FILTER
- RAIN BIRD 44-LRC QUICK COUPLER ASSEMBLY
- IRRIGATION CONTROLLER: (WALL MOUNT) WITH RAIN SENSOR – RAIN BIRD ESP-LXME – 24 STATIONS
- SCHEDULE 40 IRRIGATION SLEEVING
- SCHEDULE 40 MAINLINE
- SCHEDULE 40 LATERAL LINES

CONTROL VALVE FLAG

12.5 G.P.M. | V1 | 1"

- G.P.M.
- CONTROLLER DESIGNATION AND VALVE NUMBER
- VALVE SIZE

20 0 20 40

SCALE IN FEET

CALL BEFORE YOU DIG 1-800-424-5555

NO.	REVISION COMMENTS	BY	REVIEW	DATE

DESIGNER

DRAWN BY

CHECKED BY

LU Submittal, Rev1 3/22/2022

STATE OF WASHINGTON MARK G. SHEETS 10/13/21 LICENSED LANDSCAPE ARCHITECT EXP. 08/23/2022

10/13/21

TITLE

communitytransit

Swift ORANGE LINE - 100% SUBMITTAL

TERMINI IRRIGATION PLANS

WESTERN TERMINUS - EDMONDS COLLEGE

(STATION # EB 3221 & WB 3222)

Otak

11241 Willows Road NE, Suite 200
Redmond, WA 98052
425.822.4446
www.otak.com

32880.H
PROJECT NUMBER

C6.311
DRAWING NO.

SHEET 387 OF 622

© 2021 OTAK, INC.

Plotted: Oct 13, 2021 - 11:31am C:\temp\AcPublish_3404\C6.310-C6.315.dwg Layout Name: C6.311

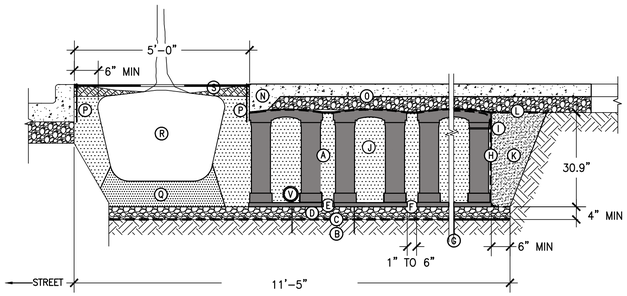

Ⓐ SILVA CELL SYSTEM (DECK, BASE, AND POSTS)
Ⓑ SUBGRADE, COMPACTED
Ⓒ GEOTEXTILE FABRIC, PLACED ABOVE SUBGRADE
Ⓓ 4" MIN AGGREGATE SUB BASE, COMPACTED TO 95% PROCTOR
Ⓔ SILVA CELL BASE SLOPE, 10% MAX
Ⓕ 1" TO 6" SPACING BETWEEN SILVA CELLS AT BASE
Ⓖ ANCHORING SPIKES, CONTACT DEEPROOT FOR ALTERNATIVE
Ⓗ GEOGRID, WRAPPED AROUND PERIMETER OF SYSTEM, WITH 6" TOE (OUTWARD FROM BASE) AND 12" EXCESS (OVER TOP OF DECK)
Ⓘ CABLE TIE, ATTACHING GEOGRID TO SILVA CELL AT BASE OF UPPER LEG FLARE, AS NEEDED
Ⓙ TOPSOIL TYPE A, PLACED IN LIFTS AND WALK-IN COMPACTED TO 75-85% PROCTOR
Ⓚ COMPACTED BACKFILL, PER PROJECT SPECIFICATIONS
Ⓛ GEOTEXTILE FABRIC TO EDGE OF EXCAVATION
Ⓜ THICKENED EDGE AT TREE OPENING (TO BE USED WITH CONCRETE)
Ⓝ PAVEMENT AND AGGREGATE BASE PER PROJECT *
Ⓟ DEEPROOT ROOT BARRIER, 12" OR 18", DEPTH DETERMINED BY THICKNESS OF PAVEMENT SECTION, INSTALL DIRECTLY ADJACENT TO CONCRETE EDGE RESTRAINT
Ⓠ TOPSOIL TYPE A BELOW ROOT BALL, COMPACTED WELL TO PREVENT SETTLING
Ⓡ ROOT BALL
Ⓢ TREE OPENING TREATMENT, PER PROJECT SPECIFICATIONS
Ⓣ DEEPROOT WATER AND AIR VENT, ROOTBALL, WHEN REQUIRED
Ⓤ DEEPROOT WATER AND AIR VENT, WHEN REQUIRED
Ⓥ 4" PERF. PVC (SDR 35 OR GREATER) OR CORRUGATED POLYETHYLENE PIPE WITH SMOOTH INTERIOR WALL, WRAPPED WITH FABRIC

NOTES
1. REFER TO PLAN SHEETS C6.100 AND C6.101 FOR SILVA CELL LAYOUT
2. EXCAVATION SHALL BE DONE IN ACCORDANCE WITH ALL APPLICABLE HEALTH AND SAFETY REGULATIONS
3. INSTALLATION TO BE COMPLETED IN ACCORDANCE WITH MANUFACTURER'S SPECIFICATIONS
4. PROVIDE SUPPLEMENTAL IRRIGATION

SILVA CELL SECTION DETAIL

NOT TO SCALE

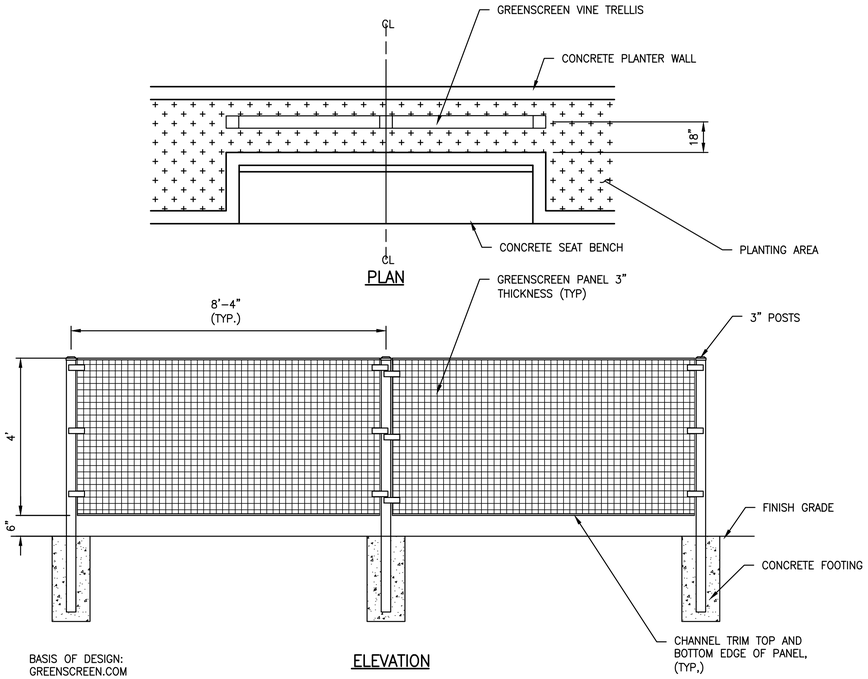

VINE TRELLIS

NOT TO SCALE

sportworks | Tofino No Scratch™, Surface Mount Bike Rack | Technical Drawing

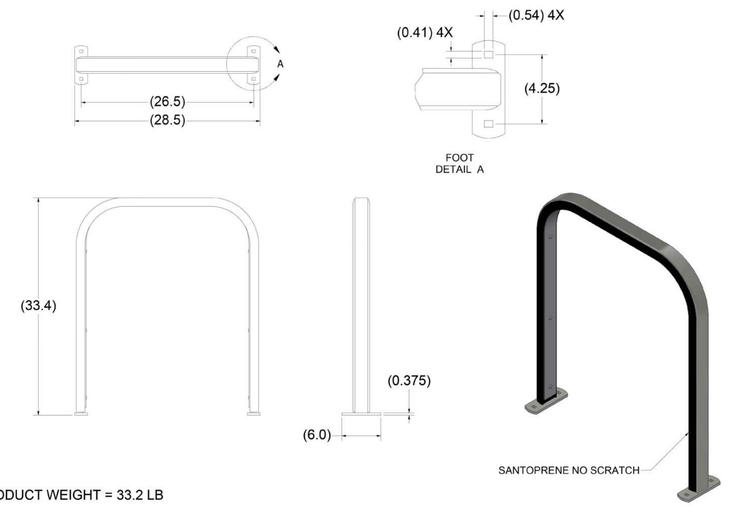

PRODUCT WEIGHT = 33.2 LB

Sportworks Northwest Inc. | 15540 Wood Red Rd NE, Bldg A-200 | Woodinville, WA 98072 | www.sportworks.com
Contact: Tel: 425-483-7000 | Fax: 425-488-9001 | salesandsupport@sportworks.com
All dimensions in inches. All dimensions and specifications nominal. Specifications are subject to change without notice. Copyright © 2019 Sportworks Northwest, Inc. All rights reserved.

FILE NAME: 3000-S-02, REVISION: A, REVISION DATE: 2/13/2019

BIKE RACK (SURFACE MOUNT)

NOT TO SCALE

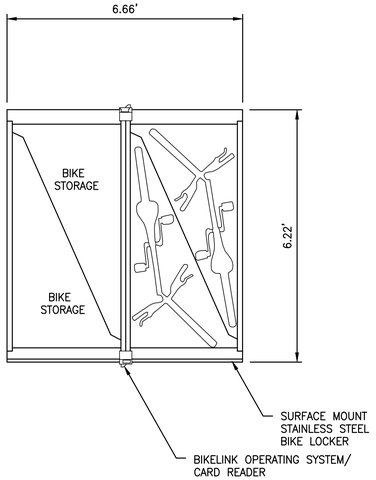

PLAN SCHEMATIC



PHOTO

NOTES:
1. BASIS OF DESIGN: BIKELINK / QUAD ELOCKER 4 SPACES, 2 CONTROLLERS (BIKELINK.ORG)
2. THESE PLANS ARE DIAGRAMMATIC AND FOR REFERENCE PURPOSES ONLY. BIKE LOCKERS AND ELOCKER CARD READER OPERATING SYSTEM ARE PROPRIETARY TO BIKELINK.
3. SYSTEM SHALL BE CONTRACTOR PURCHASED AND INSTALLED BY BIKELINK.
4. REFER TO SPECIAL PROVISIONS FOR ADDITIONAL INFORMATION.

PRODUCT SPECIFICATIONS:
1. BIKELINK OPERATING SYSTEM
2. FRAME AND DOOR: PERFORATED STAINLESS STEEL
3. BICYCLE GRAPHIC AT END PANELS
4. BLUE FIBERGLASS REINFORCED PLASTIC ROOF PANEL
5. DIVIDER PANELS: STAINLESS STEEL
6. POWER SOURCE: SOLAR

BIKE LOCKER

NOT TO SCALE

NO.	REVISION COMMENTS	BY	REVIEW	DATE

DESIGNER | DRAWN BY | CHECKED BY

1 | Submittal, | 3/22/2022

STATE OF WASHINGTON
THOMAS LUKE EARLY
LICENSED LANDSCAPE ARCHITECT
EXP. 07/08/2022
10/4/21

communitytransit
Swift ORANGE LINE – 100% SUBMITTAL
LANDSCAPING & HARDSCAPING DETAILS

TITLE

Otak
11241 Willows Road NE, Suite 200
Redmond, WA 98052
425.822.4446
www.otak.com

32880.H
PROJECT NUMBER

C6.400
DRAWING NO.

SHEET 392 OF 622

© 2021 OTAK, INC.

CALL BEFORE YOU DIG 1-800-424-5555

Plotted: Oct 04, 2021 – 11:59am K:\Project\32800\32880H\CADD\ACAD\Dwg\C6.400-C6.405.dwg Layout Name: C6.400

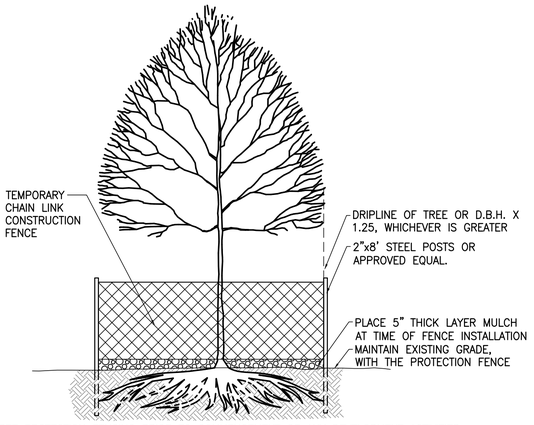

NOTES

1. INSTALL TREE PROTECTION FENCING PRIOR TO COMMENCEMENT OF ANY DEVELOPMENT ACTIVITIES.
2. 6' HIGH TEMPORARY CHAIN LINK CONSTRUCTION FENCING SHALL BE PLACED AROUND DRIPLINE OF RETAINED TREE OR AT A DISTANCE SURROUNDING THE TREE EQUAL TO ONE AND ONE–QUARTER FEET (1–1/4') FOR EVERY 1" OF TRUNK DIAMETER AT BREAST HEIGHT, WHICHEVER IS GREATER. FENCE SHALL COMPLETELY ENCIRCLE TREE(S); AVOID DRIVING POSTS OR STAKES INTO MAJOR ROOTS. EMBED STEEL POSTS DEEP ENOUGH TO SUPPORT FENCE. CONCRETE BLOCK FOOTINGS MAY BE USED WHERE POSTS ARE LOCATED ON PAVEMENT.
3. INDIVIDUAL TREES SHALL BE FENCED ON FOUR (4) SIDES. PLACARDS SHALL BE PLACED ON EACH SIDE OF THE FENCING INDICATING THE WORDS, 'NO TRESPASSING – PROTECTED TREES,'. SUPERVISION BY CONTRACTOR IS REQUIRED WHENEVER EQUIPMENT OR TRUCKS ARE MOVING NEAR TREES.
4. IMPERVIOUS SURFACES PROHIBITED WITHIN THE DRIP LINE: THE APPLICANT MAY NOT INSTALL IMPERVIOUS SURFACE MATERIAL WITHIN THE AREA DEFINED BY THE DRIP LINE OF ANY TREE TO BE RETAINED.
5. RESTRICTIONS ON GRADING WITHIN THE DRIP LINES OF RETAINED TREES: THE GRADE LEVEL AROUND ANY TREE TO BE RETAINED MAY NOT BE LOWERED WITHIN THE GREATER OF THE FOLLOWING AREAS: (I) THE AREA DEFINED BY THE DRIP LINE OF THE TREE, OR (II) AN AREA AROUND THE TREE EQUAL TO ONE AND ONE–HALF FEET (1–1/2') IN DIAMETER FOR EACH ONE INCH (1") OF TREE CALIPER.
6. ALL AREAS WITHIN THE REQUIRED FENCING SHALL BE COVERED COMPLETELY AND EVENLY WITH A MINIMUM OF FIVE INCHES (5") OF BARK MULCH PRIOR TO INSTALLATION OF THE PROTECTIVE FENCING
7. TREATMENT OF ROOTS EXPOSED DURING CONSTRUCTION: FOR ROOTS OVER 1" IN DIA., MAKE A CLEAN STRAIGHT CUT TO REMOVE DAMAGED PORTION OF ROOT. ALL EXPOSED ROOTS SHALL BE COVERED WITH TOPSOIL IMMEDIATELY TO PREVENT DRYING.
8. DO NOT FILL, EXCAVATE, STACK OR STORE ANY EQUIPMENT, DISPOSE OF ANY MATERIALS, SUPPLIES OR FLUIDS, OPERATE ANY EQUIPMENT, INSTALL IMPERVIOUS SURFACES, OR COMPACT THE EARTH IN ANY WAY WITHIN THE AREA DEFINED BY THE DRIP LINE OF ANY TREE TO BE RETAINED
9. NO PRUNING SHALL BE PERFORMED EXCEPT BY APPROVED ARBORIST.

TREE PROTECTION

NOT TO SCALE

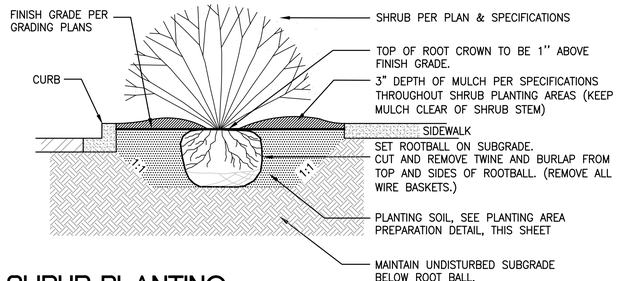

SHRUB PLANTING

NOT TO SCALE

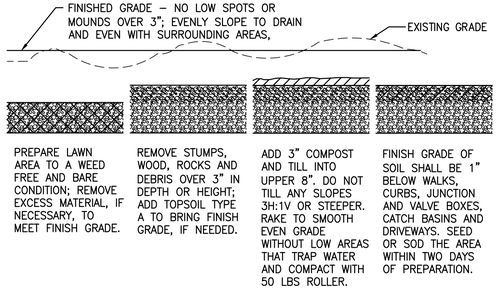

LAWN AREA PREPARATION

NTS

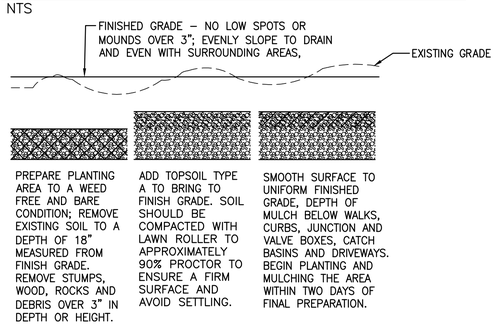

PLANTING AREA PREPARATION

NTS

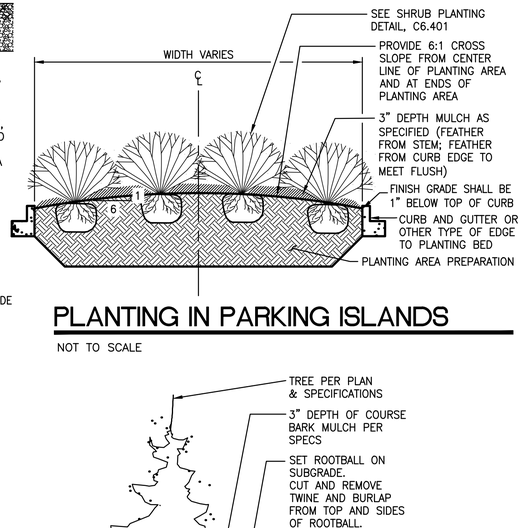

PLANTING IN PARKING ISLANDS

NOT TO SCALE

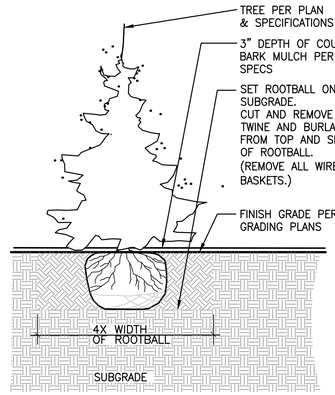

CONIFER TREE PLANTING

NOT TO SCALE

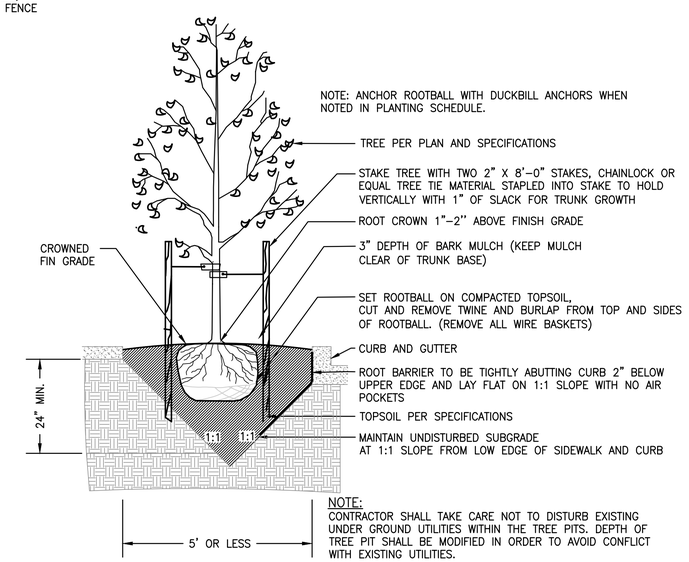

NOTE:
CONTRACTOR SHALL TAKE CARE NOT TO DISTURB EXISTING UNDER GROUND UTILITIES WITHIN THE TREE PITS. DEPTH OF TREE PIT SHALL BE MODIFIED IN ORDER TO AVOID CONFLICT WITH EXISTING UTILITIES.

DECIDUOUS TREE PLANTING IN 5' OR LESS WIDE STRIP

NOT TO SCALE

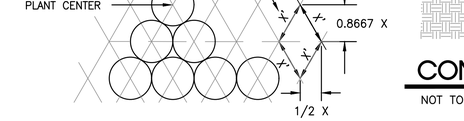

TRIANGULAR O.C. PLANT SPACING

NOT TO SCALE

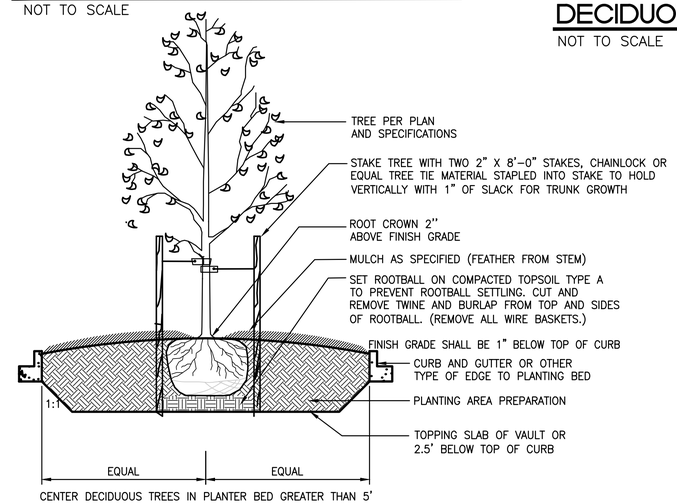

CENTER DECIDUOUS TREES IN PLANTER BED GREATER THAN 5'

DECIDUOUS TREE PLANTING IN STRIP WIDER THAN 5'

NOT TO SCALE

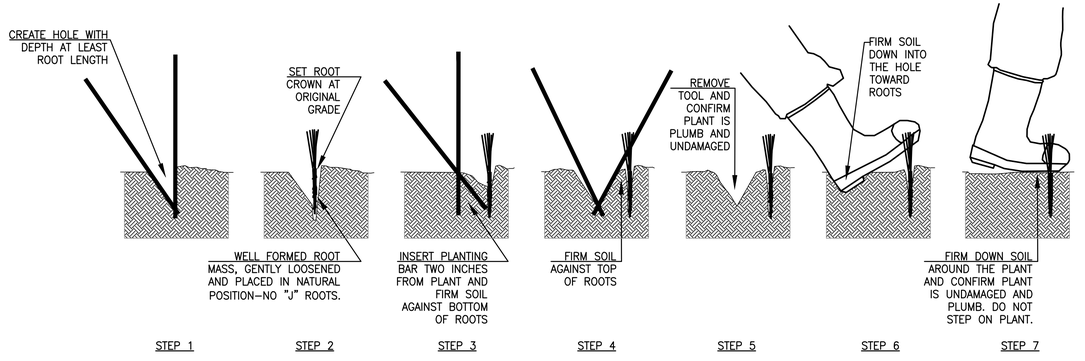

TWO YEAR TRANSPLANT PLANTING

NOT TO SCALE

LIVE STAKE INSTALLATION NOTES:

1. KEEP LIVE STAKES MOIST/WET IN BUCKETS OR WET BURLAP SACKS. ON HOT DAYS, KEEP STAKES IN THE SHADE UNTIL YOU PLANT THEM.
2. IN HARD GROUND, USE AN IRON BAR OR STAR DRILL TO PREPARE THE HOLES FOR THE LIVE STAKE.
3. PLACE LIVE STAKE IN PREPARED HOLE; DO NOT USE AXE OR SLEDGE FOR DRIVING LIVE STAKES.
4. AVOID STRIPPING BARK OR BRUISING LIVE STAKES DURING INSTALLATION.
5. BURY 4/5 OF LIVE STAKE LENGTH.
6. AFTER LIVE STAKE IS PLACED IN GROUND, CUT DAMAGED END OF LIVE STAKE TO LEAVE AT LEAST TWO BUDS EXPOSED, MIN.
7. FILL VOID AROUND LIVE STAKE WITH SOIL.

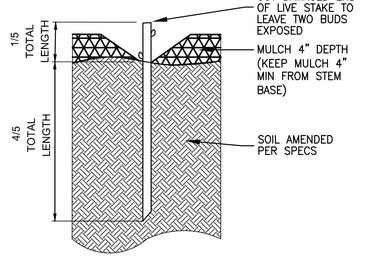

LIVE STAKE PLANTING DETAIL

NOT TO SCALE

CALL BEFORE YOU DIG 1–800–424–5555

NO.	REVISION COMMENTS	BY	REVIEW	DATE

DESIGNER | DRAWN BY | CHECKED BY

STATE OF WASHINGTON THOMAS LUKE EARLY LICENSED LANDSCAPE ARCHITECT 10/4/21

10/4/21

TITLE

SUBMITTAL

communitytransit Swift ORANGE LINE – 100% SUBMITTAL

LANDSCAPING & HARDSCAPING DETAILS

Otak

11241 Willows Road NE, Suite 200
Redmond, WA 98052
425.822.4446
www.otak.com

32880 H
PROJECT NUMBER

C6.401
DRAWING NO.

SHEET 393 OF 622

© 2021 OTAK, INC.

Plotted: Oct 04, 2021 – 11:59am K:\Project\32800\32880H\CADD\ACAD\Dwg\C6.400–C6.405.dwg Layout Name: C6.401

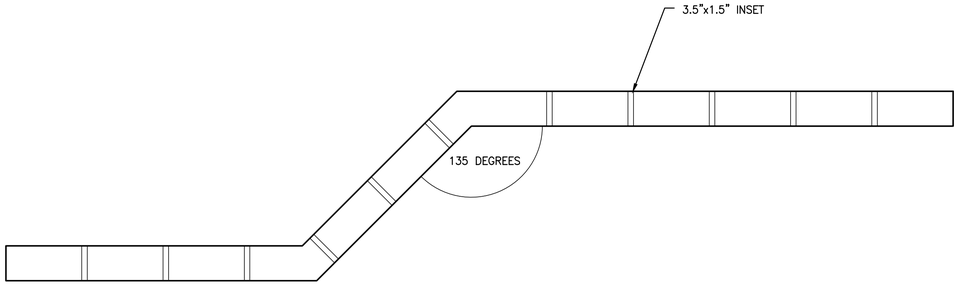

EXAMPLE PLAN

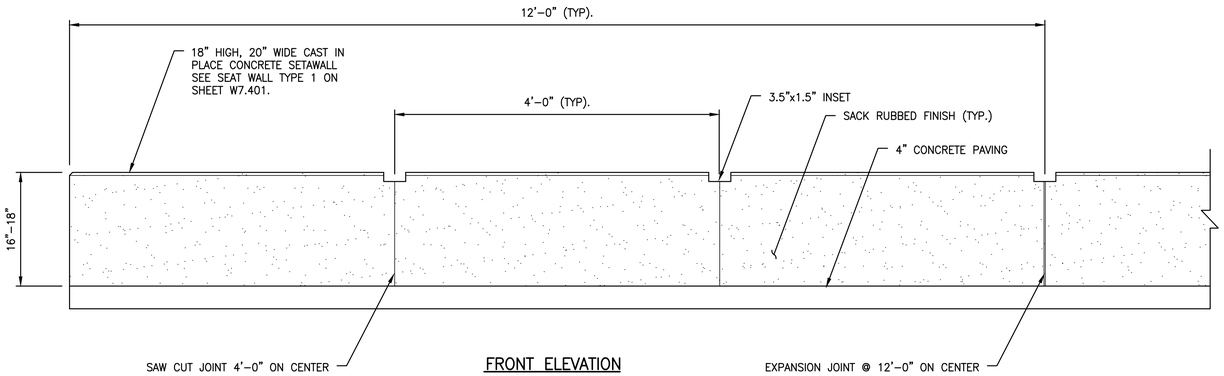

FRONT ELEVATION

CONCRETE SEAT WALL

NOT TO SCALE

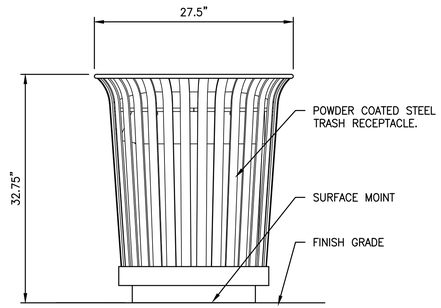

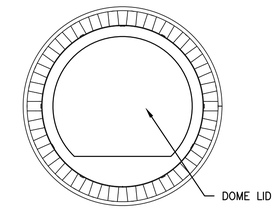

PLAN VIEW

NOTE:
1. COLOR: BLUE
2. INCLUDE DOME LID
3. INCLUDE 32 GALLON LINER (NOT SHOWN)

FRONT ELEVATION

TRASH RECEPTACLE

NOT TO SCALE

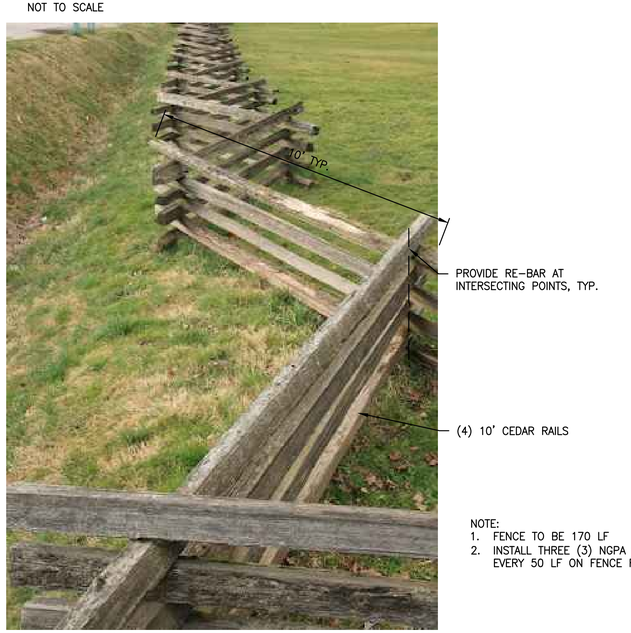

NOTE:
1. FENCE TO BE 170 LF
2. INSTALL THREE (3) NGPA SIGNS EVERY 50 LF ON FENCE RAIL

ZIG-ZAG CEDAR NO POST FENCE

NOT TO SCALE

CALL BEFORE YOU DIG 1-800-424-5555

NO.	REVISION COMMENTS	BY	REVIEW	DATE

DESIGNER | DRAWN BY | CHECKED BY

STATE OF WASHINGTON
THOMAS LUKE EARLY
NO. 1199 EXP. 07/08/2020
LICENSED LANDSCAPE ARCHITECT
10/4/21

communitytransit
Swift ORANGE LINE - 100% SUBMITTAL
LANDSCAPING & HARDSCAPING DETAILS

TITLE

Otak
11241 Willows Road NE, Suite 200
Redmond, WA 98052
425.822.4446
www.otak.com

32880.H
PROJECT NUMBER

C6.402
DRAWING NO.

SHEET 394 OF 622

© 2021 OTAK, INC.

Plotted: Oct 04, 2021 - 11:59am K:\Project\32800\32880H\CADD\ACAD\Dwg\C6.400-C6.405.dwg Layout Name: C6.402

PDR-000721-2021 Lynnwood Edmonds College Terminus

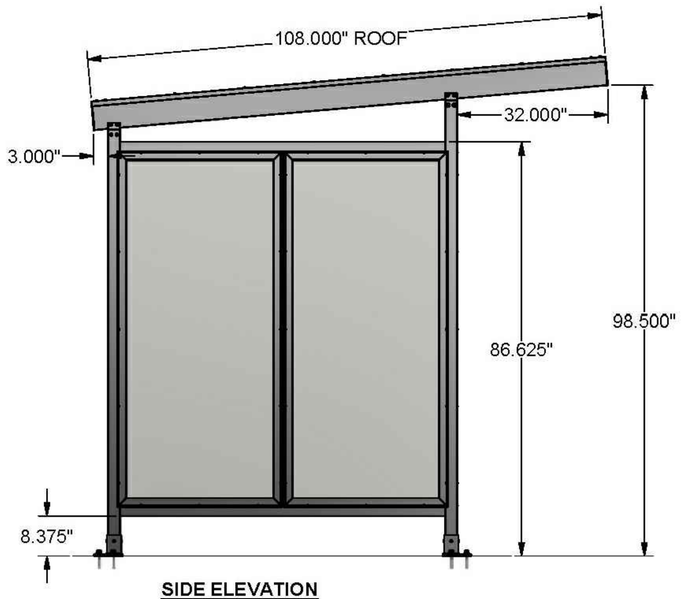

SIDE ELEVATION

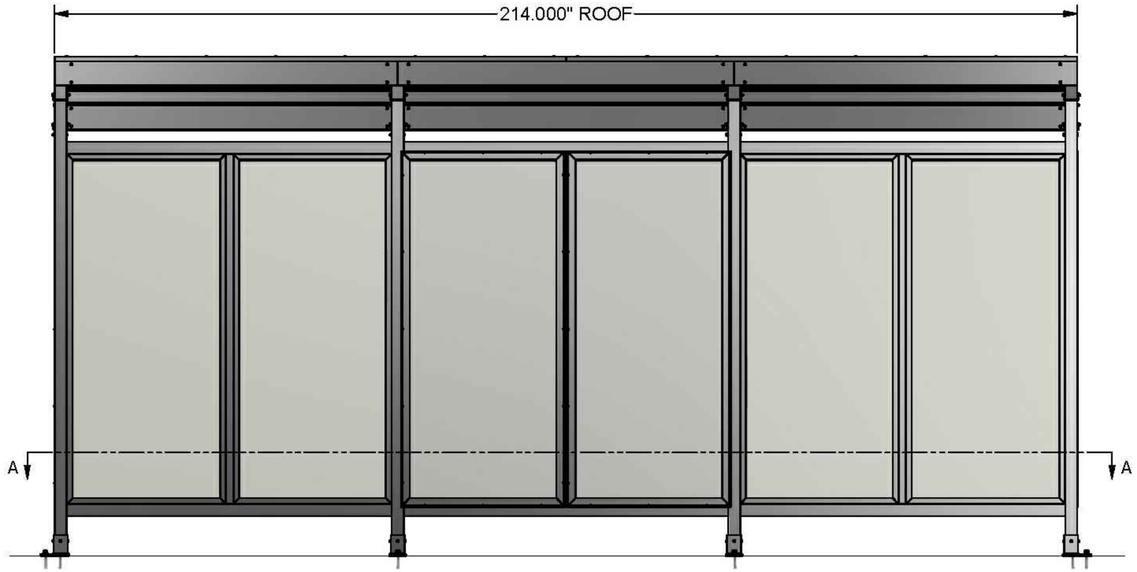

FRONT ELEVATION

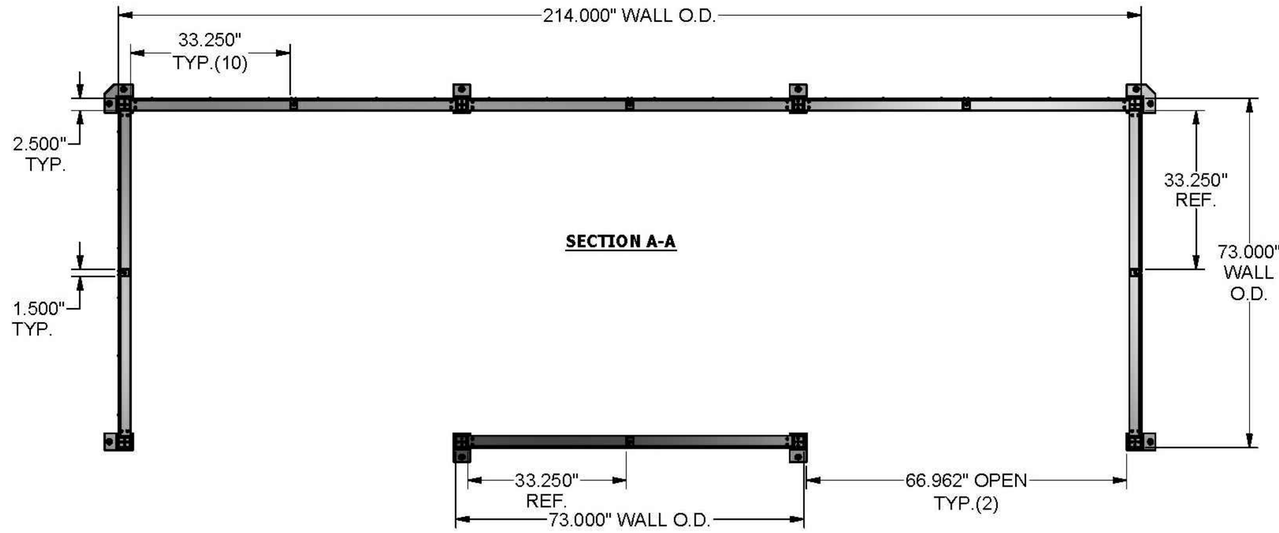

SECTION A-A

SPECIFICATIONS:
- T.B.D. ANODIZED OR POWDER COATED ALUMINUM STRUCTURE
- 1/4" CLEAR TEMPERED SAFETY GLASS

- T.B.D. 16mm STRUCTURED POLYCARBONATE SLOPED ROOF

OPTIONAL:
- T.B.D. FREESTANDING BENCH WITH T.B.D. ALUMINUM OR HDPE BENCH SLATS
- SOLAR LIGHTING PACKAGE WITH L.E.D. LIGHT AND BATTERY ENCLOSURE
- A/C POWERED PACKAGE WITH L.E.D. LIGHT AND POWER SUPPLY ENCLOSURE/PHOTOCELL
- DUAL USB PORT INTEGRATED INTO COLUMN (SOLAR OR A/C POWERED)

Brasco

BRASCO INTERNATIONAL, INC.
32400 INDUSTRIAL DR.
MADISON HEIGHTS, MICHIGAN 48071
1-800-893-3665 WWW.BRASCO.COM

THIS DRAWING IS CONFIDENTIAL AND IS FOR THE SOLE USE OF OUR CUSTOMERS AND MAY NOT BE REPRODUCED OR COPIED WITHOUT WRITTEN PERMISSION FROM BRASCO INTERNATIONAL.

CUSTOMER: OTAK		DESIGNER: HAUS	CHECKER: BDH
PROJECT: CUSTOM SLIMLINE SHELTER		DATE: 5-20-20	DATE: 5-21-20
MODEL: SL-0618-F-C-FL-PT-TG	JOB #: N/A	SHEET: S-001	REVISION: A

LOCAL SHELTER
NOT TO SCALE

CALL BEFORE YOU DIG 1-800-424-5555

NO.	REVISION COMMENTS	BY	REVIEW	DATE

DESIGNER | DRAWN BY | CHECKED BY

STATE OF WASHINGTON THOMAS LUKE EARLY LICENSED LANDSCAPE ARCHITECT NO. 1199 EXP. 07/08/2020
9/24/21

communitytransit
Swift ORANGE LINE - 100% SUBMITTAL
LANDSCAPING & HARDSCAPING DETAILS

TITLE
Otak
11241 Willows Road NE, Suite 200
Redmond, WA 98052
425.822.4446
www.otak.com

32880.H
PROJECT NUMBER
C6.404
DRAWING NO.
SHEET 396 OF 622
© 2021 OTAK, INC.

Plotted: Sep 24, 2021 - 12:02pm K:\Project\32800\32880H\CADD\ACAD\Dwg\C6.400-C6.405.dwg Layout Name: C6.404

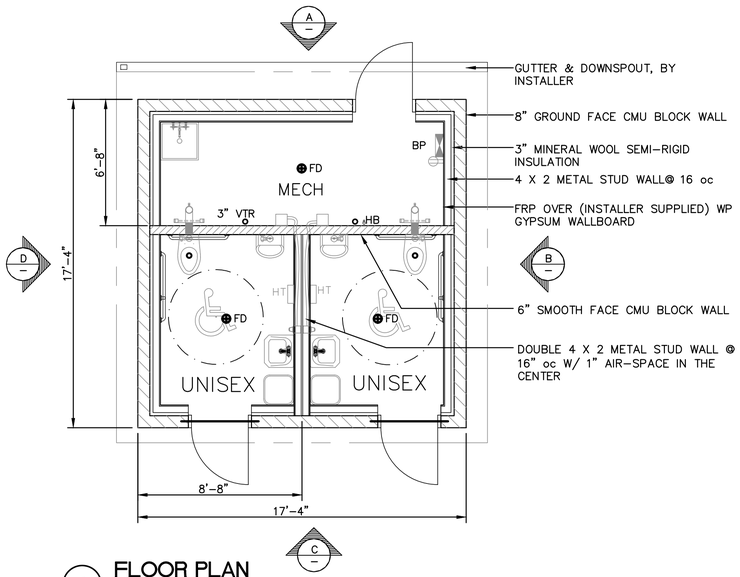

1 FLOOR PLAN

SCALE: 1/4" = 1'-0"

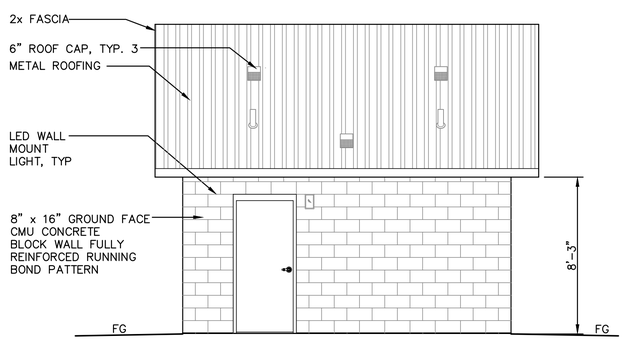

A ELEVATION VIEW

SCALE: 1/4" = 1'-0"

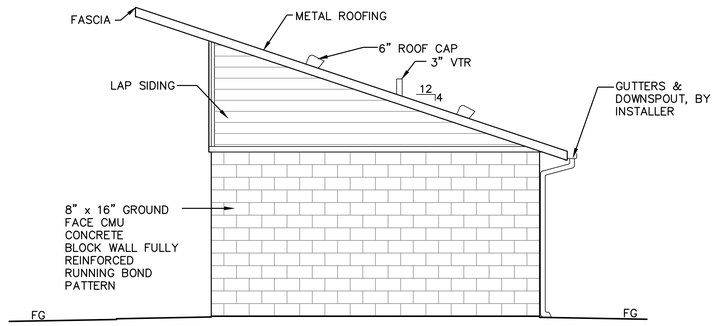

B ELEVATION VIEW

SCALE: 1/4" = 1'-0"

LEGEND		
SYMBOL	DESCRIPTION	AREA/ QUANTITY
NOT SHOWN	EXTERIOR WALL LIGHTS	3
NOT SHOWN	INTERIOR CEILING LIGHTS	3
	FLOOR DRAIN	3
HB-1	WALL FAUCET	1
	ELECTRICAL OUTLET	1
NOT SHOWN	MINI SPLIT SYSTEM	1
NOT SHOWN	ERV SYSTEM	1
NOT SHOWN	INSTANT WATER HEATER	2
	18 X 36 MIRROR	2
	TRASH CAN	2
NOT SHOWN	BOBRICK LARGE TWIN ROLL	2
NOT SHOWN	BOBRICK NAPKIN DISPOSAL	2
NOT SHOWN	CLEAN & SOFT TOWEL DISP	2
NOT SHOWN	BOBRICK SEAT COVER	2
NOT SHOWN	BOBRICK SOAP DISP	2
EF-4	ELECTRIC EXHAUST FAN EXHAUST FAN 70CFM	2
HD	FAST AIR HAND DRYER	2

NOTES:
1. BASIS OF DESIGN: ROMTEC 2024 SIERRA II COMPACT DOUBLE RESTROOM WITH STORAGE (MODIFIED).
2. THESE PLANS ARE DIAGRAMMATIC AND FOR REFERENCE PURPOSES ONLY. SEE ROMTEC PLAN SET #1345 FOR RESTROOM ARCHITECTURAL PLANS.
3. REFER TO SPECIAL PROVISIONS FOR ADDITIONAL INFORMATION.
4. RESTROOM FOUNDATION TO BE DESIGNED BY ROMTEC. SECTIONS IN C3.400 SERIES DETAILS SHOW ROMTEC 24" THICK MONOLITHIC SLAB FOUNDATION FOR REFERENCE. FOUNDATION CONCRETE SHALL BE PLACED OVER MIN. 6" CSBC.

DRIVER RESTROOM BUILDING

NOT TO SCALE

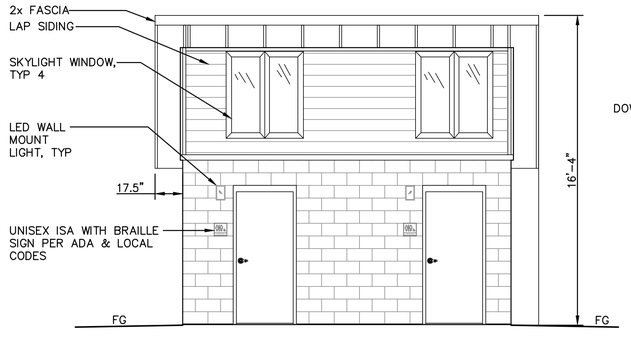

C ELEVATION VIEW

SCALE: 1/4" = 1'-0"

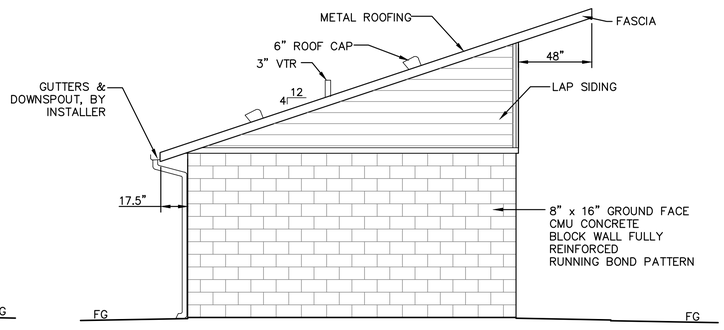

D ELEVATION VIEW

SCALE: 1/4" = 1'-0"

CALL BEFORE YOU DIG 1-800-424-5555

DESIGNER	DRAWN BY	CHECKED BY

NO.	REVISION COMMENTS	BY	REVIEW	DATE

STATE OF WASHINGTON
THOMAS LUKE EARLY
20198
EXP. 07/08/2022
LICENSED LANDSCAPE ARCHITECT

10/10/21

community transit
Swift ORANGE LINE - 100% SUBMITTAL
LANDSCAPING & HARDSCAPING DETAILS

TITLE

Otak
11241 Willows Road NE, Suite 200
Redmond, WA 98052
425.822.4446
www.otak.com

32880.H
PROJECT NUMBER

C6.405
DRAWING NO.

SHEET 397 OF 622

© 2021 OTAK, INC.

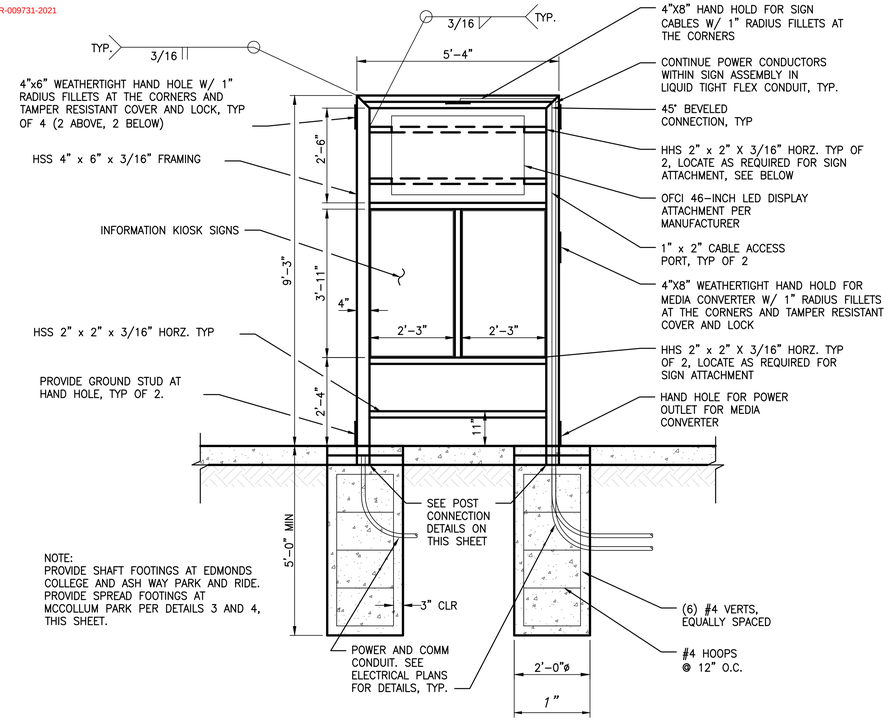

1 FREESTANDING RTPI SIGN ASSEMBLY

SCALE: 1/2" = 1'–0"

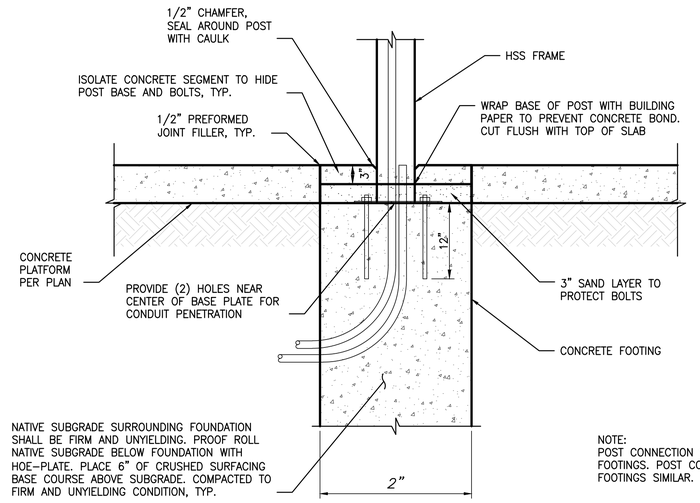

ELEVATION

GENERAL NOTES

1. ALL STEEL FRAMING, AND ANGLE BRACKETS FOR SIGN SUPPORTS ARE TO BE COATED WITH COMMUNITY TRANSIT BLUE INDUSTRIAL EPOXY PAINT (POLYURETHANE, 928, FORMULA – 928K93599, FORMULA NAME OBLUE, AVAILABLE AT WESCO AUTO PAINT). SURFACE PREP AND PRIME PER MANUFACTURER'S RECOMMENDATION.
2. ALL SIGNS CONNECTED BY 1 POWER CONDUIT AND 1 DATA CONDUIT.
3. SIGN AND SUPPORT STRUCTURES ARE TO BE INSTALLED LEVEL AND PLUMB. VARIATIONS SHALL NOT EXCEED 1/4" IN ANY 10 FT LENGTH.
4. ALL WELDS ON FREESTANDING RTPI SIGN ASSEMBLY SHALL BE CONTINUOUS.

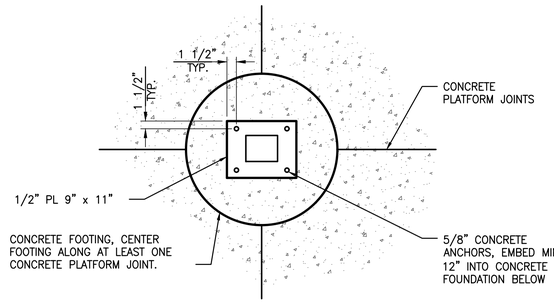

PLAN VIEW

NOTE:
POST CONNECTION SHOWN AT SHAFT FOOTINGS. POST CONNECTIONS AT SPREAD FOOTINGS SIMILAR.

2 POST CONNECTION DETAILS

SCALE: 1" = 1'–0"

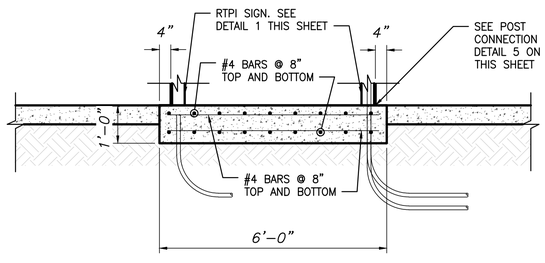

3 MCCOLLUM PARK FREESTANDING RTPI SIGN ASSEMBLY

SCALE: 1/2" = 1'–0"

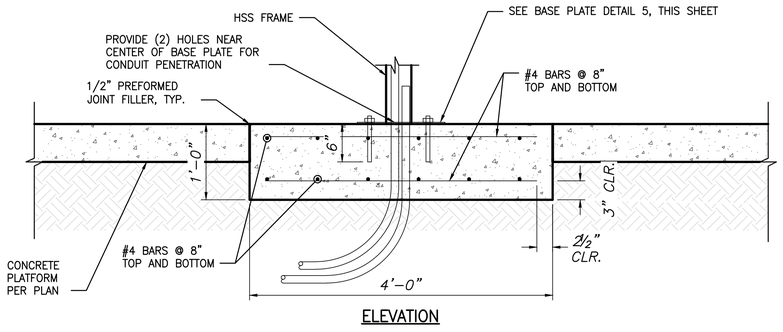

ELEVATION

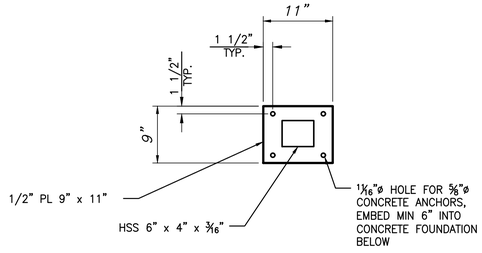

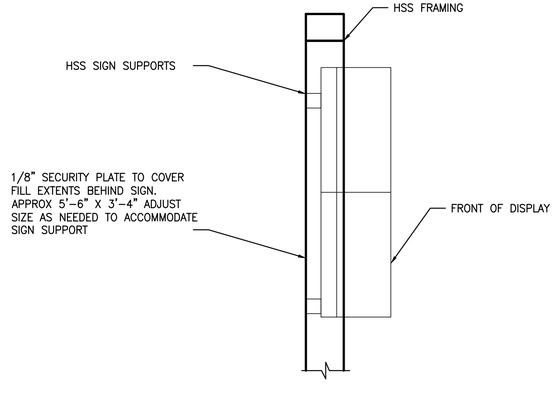

4 MCCOLLUM PARK POST CONNECTION DETAILS

SCALE: 1" = 1'–0"

5 BASE PLATE DETAIL

SCALE: 1" = 1'–0"

6 RTPI PARTIAL SECTION

SCALE: 1" = 1'–0"

CALL BEFORE YOU DIG 1–800–424–5555

NO.	REVISION COMMENTS	BY	REVIEW	DATE

DESIGNER | DRAWN BY | CHECKED BY

ROBERT P. DOHERTY
STATE OF WASHINGTON
43425
REGISTERED
PROFESSIONAL ENGINEER

11/2/21

Plotted: Nov 02, 2021 – 4:30pm K:\Project\32800\32880H\CADD\ACAD\Dwg\C6.406–C6.407.dwg Layout Name: C6.406

communitytransit

Swift ORANGE LINE – 100% SUBMITTAL

LANDSCAPING & HARDSCAPING DETAILS

RTPI SIGN DETAIL

TITLE

Otak
11241 Willows Road NE, Suite 200
Redmond, WA 98052
425.822.4446
www.otak.com

32880.H
PROJECT NUMBER

C6.406
DRAWING NO.

SHEET 398 OF 622

© 2021 OTAK, INC.

MADE IN USA

emcom

H330 Free Standing Housing

The stainless steel free standing phone pedestal is ideal for environments that require a vandal-resistant point of communication. The always illuminated blue LED beacon provides high visibility and a sense of security. Accepts Emcom's IP60XX family of IP phones.

Advantages

- stainless steel construction
- high impact polycarbonate lens
- fasteners + mounting bolts included
- integrated blue LED beacon
- accepts Emcom's IP60XX family of IP phones
- custom colors (blue or yellow standard)
- beveled design provides optimal signage visibility
- available with custom signage & lettering



(shown with IP6000 not included)

Dimensions

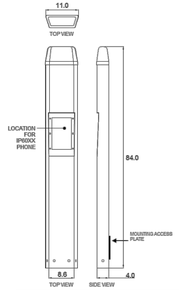

Specifications

Dimensions:	84" H x 11" W x 4" D
Material:	stainless steel & high impact polycarbonate
Weight:	55 lbs.
Connectors:	1 pair for beacon
Operating Temp:	-40°C to 70°C (-40°F to 158°F)

PO Box 59
Windsor, NJ 08561

92 N Main St , Bldg. 18A
Windsor, NJ 08561

Contact: info@emcomsys.com
+1 (609) 585-5500
www.emcomsys.com

The dynamic nature of this product design dictates that the information contained in this document be subject to change without notice.
Emcom assumes no responsibility for errors and/or omissions contained herein.

10 JUN 20

MADE IN USA

emcom

IP6030-15 Rugged, VoIP Handset Phone

The IP6030-15 is a hardened, vandal-resistant, intelligent handset telephone that provides VoIP (Voice over Internet Protocol) Communications utilizing SIP (Session Initiation Protocol). It is designed to withstand the harsh environments of subways, train stations, and tunnels, and is ideal for waysides, bridges, airports, and other public areas.

Advantages

- Noise Canceling Microphone
- Hearing Aid Compatible
- Armored Cable, Hytrel Coiled Cord (optional)
- Remote Programming and Volume Adjust Via Web Browser or EmVista Maintenance Station
- Auxiliary Contact Closures
- 2 Year Warranty



Dimensions

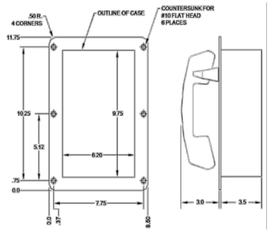

Specifications

Dimensions:	11.75" H x 8.5" W x 3.5" D
Panel:	12 Ga. (1.02") Brushed SS
Weight:	8lbs.
Armored Cord:	500 Lbs. Pull Stretch
Connectors:	2 RJ-45, 2 Aux. Contacts, 1 Power
Operating Temp:	-30° C to +60° C (-22° F to +140° C
Power:	3.4 Watts at Full Volume 9 to 54 VDC, 48 VDC PoE Or 110 –240 VAC 50-60 Hz
2 Aux. Contacts:	120mA-250VAC Rating Opto-Isolated
Free-Response:	300Hz—3KHz
MTBF:	Greater than 90000 Hours
Compliance:	UL60950-1 CSA C22.2 No.60950-1
Compatibility:	Mitel Cisco Genetec

PO Box 59
Windsor, NJ 08561

92 N Main St , Bldg. 18A
Windsor, NJ 08561

Contact: info@emcomsys.com
+1 (609) 585-5500
www.emcomsys.com

The dynamic nature of this product design dictates that the information contained in this document be subject to change without notice.
Emcom assumes no responsibility for errors and/or omissions contained herein.

01 JULY 20

emcom

H305 - Door For Surface Mount Box H300

The H305 is a rugged, stainless steel, door that mates with the Emcom H300 surface mount enclosure. The door includes a keyed lock and a concealed stainless steel spring closure. The door can be mounted to open from the left side or the right side.

Advantages

- Stainless Steel Construction
- Concealed SS Spring Closure
- Door Latches in Open Position
- Door Can be Reversed



Shown with H300 Housing

Dimensions

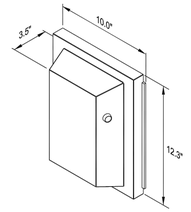

Specifications

Dimensions:	12.3" H x 10" W x 3.5" D
Material:	16 Ga. (.062") Stainless Steel
Weight:	7 lbs.
Finish:	Brushed Stainless Red Powder Coat Yellow Powder Coat (shown)

127 Route 206 South, STE 27
Trenton, NJ 08610

Contact: info@emcomsys.com
+1 (609) 585-5500
www.emcomsys.com

The dynamic nature of this product design dictates that the information contained in this document be subject to change without notice.
Emcom assumes no responsibility for errors and/or omissions contained herein.

28 FEB 19

1 BLUE LIGHT EMERGENCY TOWER DETAIL

NOT TO SCALE

CALL BEFORE YOU DIG 1–800–424–5555

NO.	REVISION COMMENTS	BY	REVIEW	DATE

DESIGNER | DRAWN BY | CHECKED BY

LLI Submittal, Rev 3/22/2022

STATE OF WASHINGTON
THOMAS LUKE ENTLY
21998
REGISTERED LANDSCAPE ARCHITECT
EXP. 07/08/2022
9/24/21

communitytransit
Swift ORANGE LINE – 100% SUBMITTAL
LANDSCAPING & HARDSCAPING DETAILS
BLUE LIGHT EMERGENCY TOWER

TITLE

Otak

11241 Willows Road NE, Suite 200
Redmond, WA 98052
425.822.4446
www.otak.com

32880.H
PROJECT NUMBER

C6.407
DRAWING NO.

SHEET 399 OF 622

© 2021 OTAK, INC.

Plotted: Sep 24, 2021 – 12:03pm K:\Project\32800\32880H\CADD\ACAD\Dwg\C6.406–C6.407.dwg Layout Name: C6.407

PDR-009[3]-2021

Lynnwood Edmonds College Terminus

PLANT SCHEDULE

TREES	QTY	BOTANICAL / COMMON NAME	CONT	CAL	SIZE
	18	ACER CIRCINATUM / VINE MAPLE	5 GAL		5'–6'
	15	CORNUS KOUSA CHINENSIS / CHINESE DOGWOOD	B&B	2"	8'–12'
	13	GLEDITSIA TRIACANTHOS 'DRAVES' TM / STREET KEEPER HONEY LOCUST	B&B	2"	6'–8'
	7	JUNIPERUS SCOPULORUM 'GRAY GLEAM' / GRAY GLEAM JUNIPER	B&B		6'–8'
	37	JUNIPERUS VIRGINIANA 'TAYLOR' / TAYLOR EASTERN REDCEDAR	B&B		6'–8'
	10	PLATANUS X ACERIFOLIA 'BLOODGOOD' / LONDON PLANE TREE	B&B	2"	
	52	POPULUS TREMULOIDES 'JFS–COLUMN' TM / MOUNTAIN SENTINEL QUAKING ASPEN	B&B	2"	8'–10'
	5	QUERCUS GARRYANA / OREGON OAK	B&B	1 1/2"	8'–12'
	22	QUERCUS ROBUR X ALBA 'JFS–KW1QX' / STREET SPIRE OAK	B&B	2"	8'–12'
	3	THUJA PLICATA / WESTERN RED CEDAR	5 GAL		4'–6'

SHRUBS	QTY	BOTANICAL / COMMON NAME	CONT
	17	ARBUTUS UNEDO 'COMPACTA' / DWARF STRAWBERRY TREE	5 GAL
	567	BERBERIS AQUIFOLIUM / OREGON GRAPE	5 GAL
	52	BERBERIS NERVOSA / LONGLEAF BARBERRY	1 GAL.
	105	BERBERIS THUNBERGII 'CONCORDE' / CONCORDE JAPANESE BARBERRY	1 GAL
	27	BERBERIS X GLADWYNESIS 'WILLIAM PENN' / WILLIAM PENN BARBERRY	2 GAL
	22	CALAMAGROSTIS X ACUTIFLORA 'KARL FOERSTER' / FEATHER REED GRASS	1 GAL.
	227	CISTUS X AGUILARII 'MACULATUS' / ROCKROSE	2 GAL
	66	CLEMATIS ARMANDII / EVERGREEN CLEMATIS	1 GAL.
	100	CORNUS STOLONIFERA 'FARROW' / ARCTIC FIRE DOGWOOD	1 GAL.
	26	CORYLUS CORNUTA / WESTERN HAZELNUT	5 GAL
	3,211	EPIMEDIUM X VERSICOLOR 'NEO–SULPHUREUM' / NEO–SULPHUREUM BARRENWORT	1 GAL
	610	ESCALLONIA X 'COMPACTA' / COMPACT ESCALLONIA	2 GAL
	108	GAULTHERIA SHALLON / SALAL	1 GAL.
	24	HOLODISCUS DISCOLOR / OCEAN–SPRAY	2 GAL.
	133	JUNCUS INFLEXUS 'BLUE ARROWS' / BLUE ARROWS JUNCUS	1 GAL.
	179	JUNIPERUS HORIZONTALIS 'YOUNGSTOWN' / CREEPING JUNIPER	1 GAL.
	14	JUNIPERUS PROCUMBENS 'NANA' / SHORE JUNIPER	1 GAL.
	31	LAVANDULA X INTERMEDIA 'PROVENCE' / PROVENCE LAVENDER	2 GAL
	3,038	LIRIOPE MUSCARI 'EMERALD GODDESS' / EMERALD GODDESS LILYTURF	1 GAL.
	492	MAHONIA REPENS / CREEPING MAHONIA	2 GAL
	13	MYRICA CALIFORNICA / PACIFIC WAX MYRTLE	5 GAL
	620	NANDINA DOMESTICA 'TUSCAN FLAME' / TUSCAN FLAME HEAVENLY BAMBOO	2 GAL
	33	PENNISETUM ALOPECUROIDES 'HAMELN' / HAMELN FOUNTAIN GRASS	1 GAL
	23	PINUS MUGO 'SLOWMOUND' / MUGO PINE	3 GAL
	279	POLYSTICHUM MUNITUM / WESTERN SWORD FERN	1 GAL.
	160	POTENTILLA FRUTICOSA 'GOLD DROP' / GOLD DROP POTENTILLA	2 GAL
	51	PRUNUS LAUROCERASUS 'OTTO LUYKEN' / OTTO LUYKEN LAUREL	5 GAL
	198	RHAPHIOLEPIS INDICA 'BALLERINA' / BALLERINA INDIAN HAWTHORN	2 GAL
	66	ROSA NUTKANA / NOOTKA ROSE	2 GAL
	86	SALIX SCOULERIANA / SCOULER'S WILLOW	LIVE STAKES
	500	SPIRAEA X BUMALDA 'GOLDFLAME' / GOLDFLAME SPIREA	2 GAL
	140	STIPA TENUISSIMA / FINESTEM NEEDLEGRASS	1 GAL.
	1,064	SYMPHORICARPOS ALBUS / COMMON WHITE SNOWBERRY	1 GAL
	59	TAXUS X MEDIA 'DENSIFORMIS' / DENSE YEW	5 GAL
	181	VIBURNUM DAVIDII / DAVID VIBURNUM	5 GAL

GROUND COVERS	QTY	BOTANICAL / COMMON NAME	CONT	
	48,942 SF	2" DEPTH BARK MULCH	N/A	
	1,648	CAREX OBNUPTA / SLOUGH SEDGE	PLUG	18" o.c.
	8	CORNUS STOLONIFERA / DOGWOOD	LIVE STAKE	96" o.c.
	28,842 SF	EROSION CONTROL SEED MIX	SEED	
	6,336	JUNCUS TENUIS / POVERTY RUSH	PLUG	12" o.c.
	34,248 SF	LAWN	SOD	
	1,556 SF	ROCK MULCH / 1–1/2" ROUND ROCK	N/A	
	203 SF	4" DEPTH COMPACTED 3/4" CLEAN CRUSHED LANDSCAPE GRAVEL		

CALL BEFORE YOU DIG 1–800–424–5555

LU Submittal, Rev 3/22/2022

NO.	REVISION COMMENTS	BY	REVIEW	DATE

DESIGNER | DRAWN BY | CHECKED BY

STATE OF WASHINGTON
THOMAS LUKE EARLY
LICENSED LANDSCAPE ARCHITECT
EXP. 07/08/2022

10/7/21

communitytransit
Swift ORANGE LINE – 100% SUBMITTAL
PROJECT-WIDE PLANTING SCHEDULE

TITLE

Otak
11241 Willows Road NE, Suite 200
Redmond, WA 98052
425.822.4446
www.otak.com

32880.H
PROJECT NUMBER

C6.500
DRAWING NO.

SHEET 400 OF 622

© 2021 OTAK, INC.

Plotted: Oct 07, 2021 – 7:40pm K:\Project\32800\32880H\CADD\ACAD\Dwg\C6.500.dwg Layout Name: C6.500

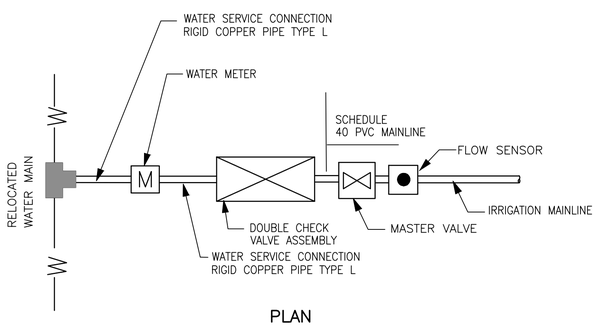

PLAN

(EDMONDS COLLEGE)

1 C6.502 IRRIGATION POINT OF CONNECTION DIAGRAM

NOT TO SCALE

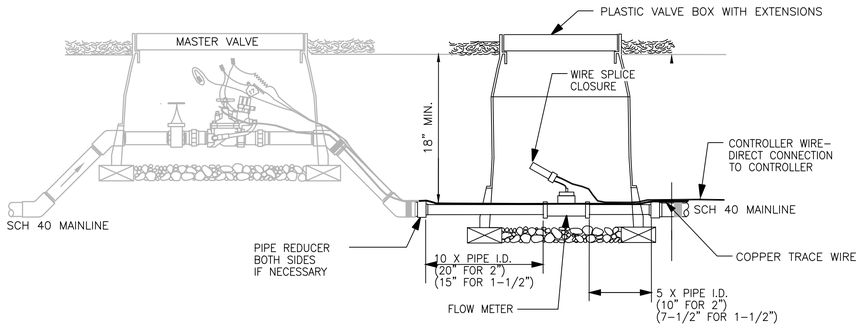

SECTION

2 C6.502 MASTER VALVE FLOW SENSOR

NOT TO SCALE

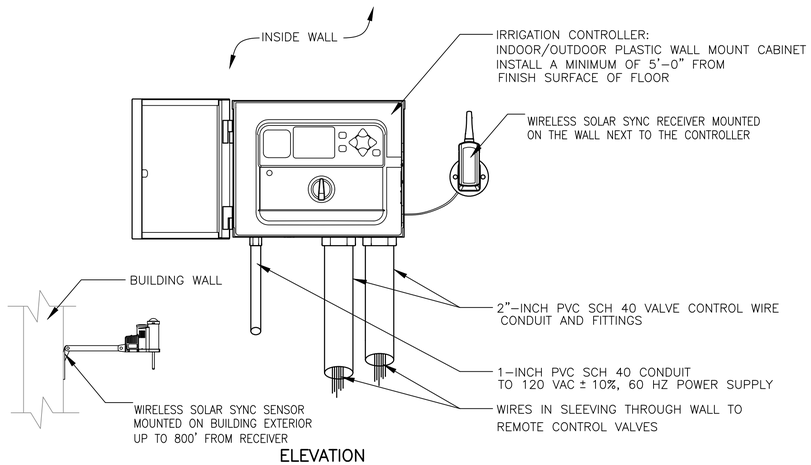

ELEVATION

(EDMONDS COLLEGE)

3 C6.502 WALL MOUNT IRRIGATION CONTROLLER

NOT TO SCALE

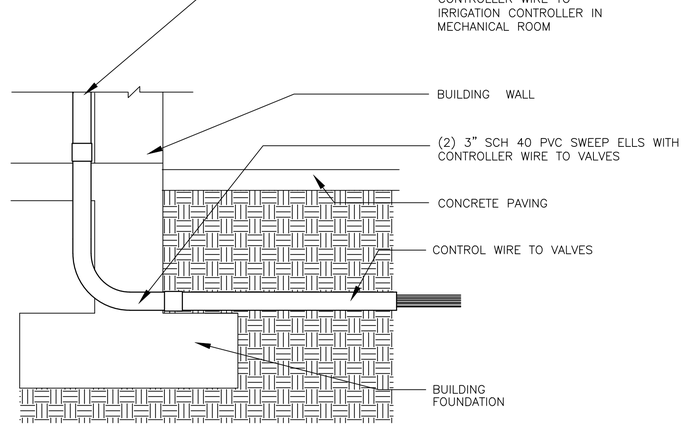

(EDMONDS COLLEGE)

3 C6.502 CONTROLLER WIRE SWEEP ELL CONNECTION

NOT TO SCALE

CALL BEFORE YOU DIG 1–800–424–5555

NO.	REVISION COMMENTS	BY	REVIEW	DATE

DESIGNER XXX | DRAWN BY XXX | CHECKED BY XXX

STATE OF WASHINGTON · MARK G. SHEETS · 20898 · EXP. 08/23/2022 · LICENSED LANDSCAPE ARCHITECT

9/24/21

community transit
Swift ORANGE LINE – 100% SUBMITTAL
IRRIGATION DETAILS

TITLE

Otak
11241 Willows Road NE, Suite 200
Redmond, WA 98052
425.822.4446
www.otak.com

32880.H
PROJECT NUMBER

C6.502
DRAWING NO.

SHEET 402 OF 622

© 2021 OTAK, INC.

Plotted: Sep 28, 2021 – 10:04am K:\Project\32800\32880H\CADD\ACAD\Dwg\C6.502 – C6.503.dwg Layout Name: C6.502

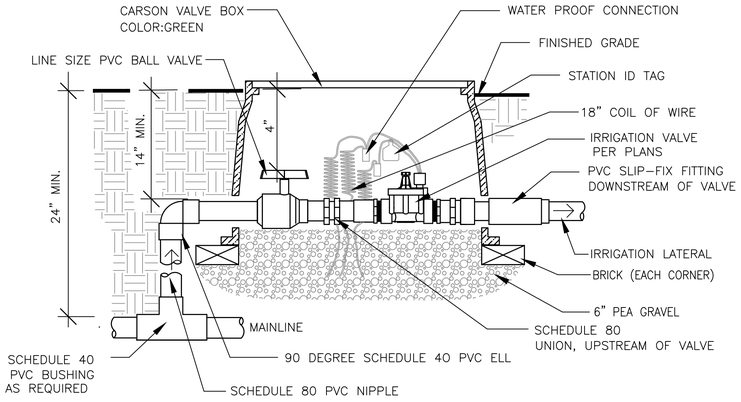

1 CONTROL VALVE ASSEMBLY
C6.503 NOT TO SCALE

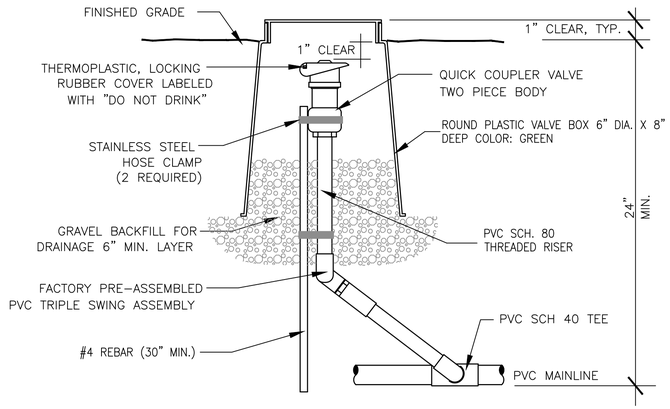

2 QUICK COUPLER VALVE ASSEMBLY
C6.503 NOT TO SCALE

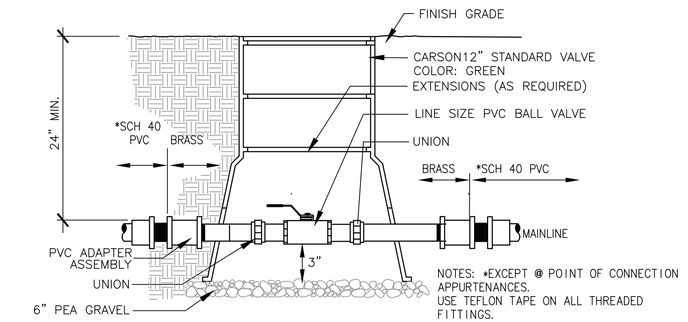

NOTES: *EXCEPT @ POINT OF CONNECTION APPURTENANCES.
USE TEFLON TAPE ON ALL THREADED FITTINGS.

NOTE:
BALL VALVE INSTALLATION UP FLOW FROM THE CROSS-CONNECTION CONTROL DEVICE SHALL RECEIVE ALL RIGID COPPER, TYPE L PIPE AND BRASS OR BRONZE FITTINGS AS REQUIRED.

3 BALL VALVE
C6.503 NOT TO SCALE

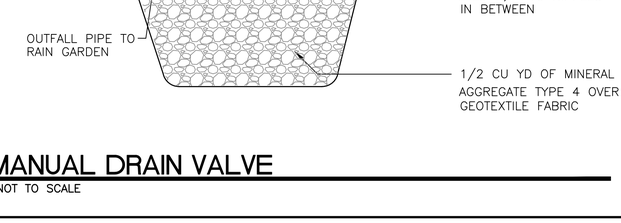

NOTES:
SNAKE ALL P.V.C. PIPING IN TRENCHING.
TIE LOOSE 3' LOOP IN ALL IRRIGATION WIRING AT CHANGES IN DIRECTION GREATER THAN 30 DEG.. UNTIE AFTER ALL CONNECTIONS HAVE BEEN MADE.

WHERE ELECTRICAL WIRING DOES NOT SHARE COMMON TRENCH, OVEREXCAVATE TRENCH 2" MIN. AND BACKFILL WITH SPECIFIED BEDDING MATERIAL.
LOCATE ALL WIRING NOT IN COMMON TRENCHES ACCURATELY ON RECORD DWGS..

4 TYPICAL TRENCHING IN LANDSCAPE AREAS
C6.503 NOT TO SCALE

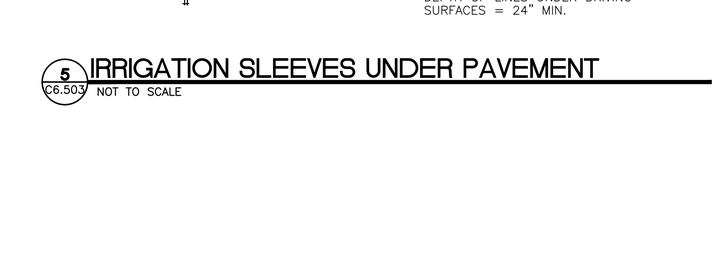

NOTES:
- EXTEND IRRIGATION SLEEVE 6" BEYOND EACH SIDE OF PAVING.
- DEPTH OF MAINLINE = 24".
- DEPTH OF LATERAL @ PAVING = 14" MIN.
- DEPTH OF LINES UNDER DRIVING SURFACES = 24" MIN.

5 IRRIGATION SLEEVES UNDER PAVEMENT
C6.503 NOT TO SCALE

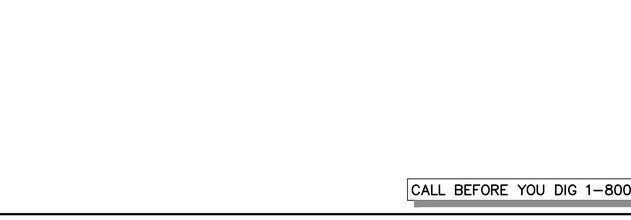

6 POP-UP HEAD
C6.503 NOT TO SCALE

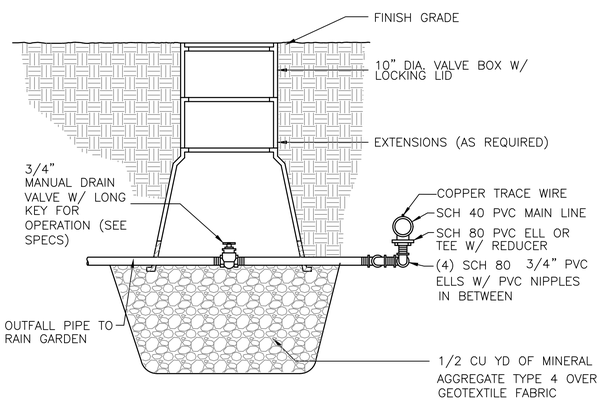

7 MANUAL DRAIN VALVE
C6.503 NOT TO SCALE

NO.	REVISION COMMENTS	BY	DATE
DESIGNER XXX	DRAWN BY XXX	CHECKED BY XXX	REVIEW

STATE OF WASHINGTON
MARK G. SHEETS
20898
LICENSED LANDSCAPE ARCHITECT
EXP. 08/23/2022
9/24/21

communitytransit
Swift ORANGE LINE - 100% SUBMITTAL
IRRIGATION DETAILS

TITLE

Otak
11241 Willows Road NE, Suite 200
Redmond, WA 98052
425.822.4446
www.otak.com

32880 H
PROJECT NUMBER

C6.503
DRAWING NO.

SHEET 403 OF 622

© 2021 OTAK, INC.

CALL BEFORE YOU DIG 1-800-424-5555

Plotted: Sep 28, 2021 - 10:04am K:\Project\32800\32880H\CADD\ACAD\Dwg\C6.502 - C6.503.dwg Layout Name: C6.503

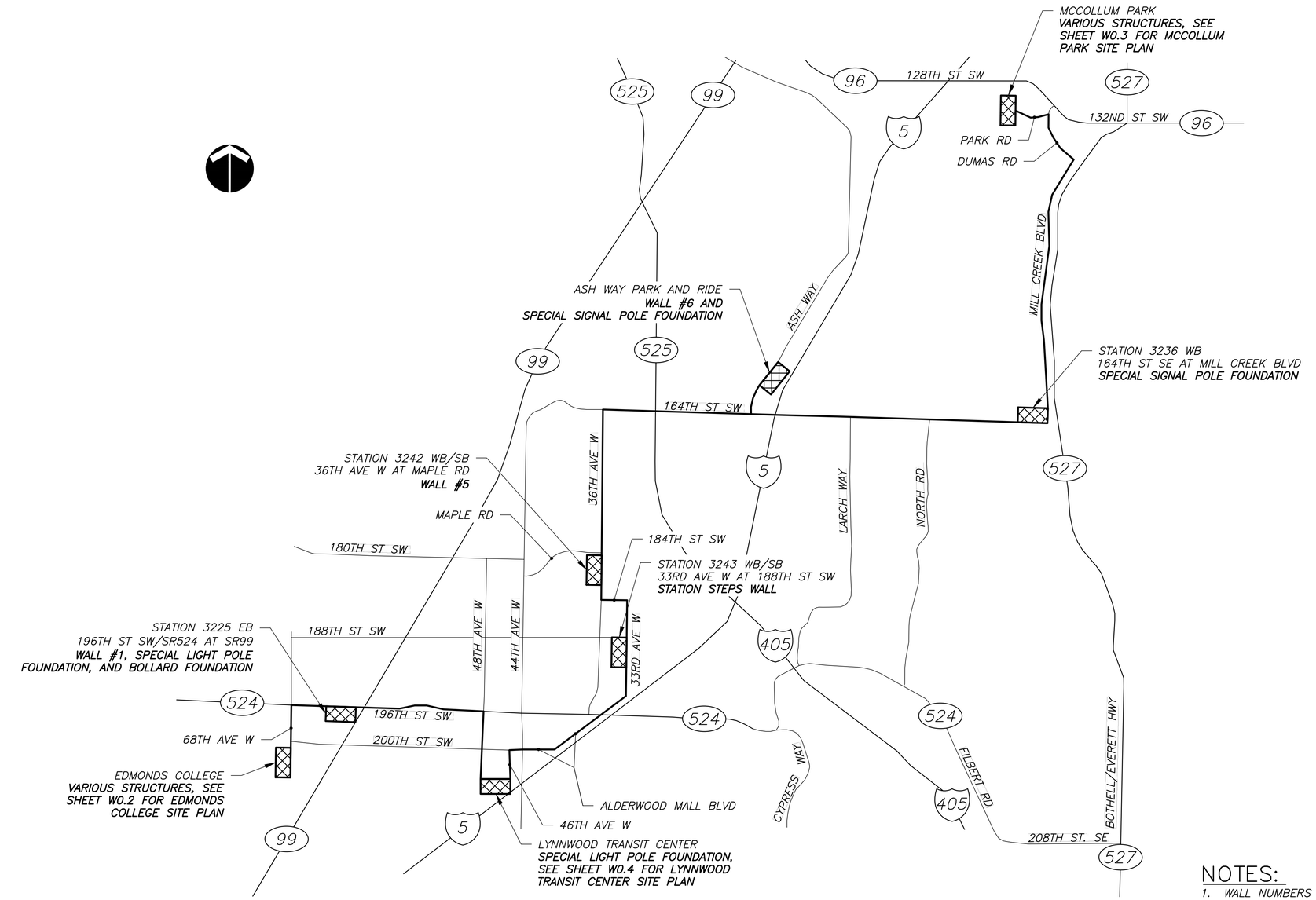

WALL AND SPECIAL POLE FOUNDATION PROJECT SITE PLAN

SCALE: N.T.S.

NOTES:

1. WALL NUMBERS 2–4 NOT USED.
2. SEE SHEET **W0.2** FOR EDMONDS COLLEGE SITE PLAN.
3. SEE SHEET **W0.3** FOR MCCOLLUM PARK SITE PLAN.
4. SEE SHEET **W0.4** FOR LYNNWOOD TRANSIT CENTER SITE PLAN.
5. SEE SHEET **W0.5** FOR GENERAL NOTES.
6. SEE SHEETS **W1.1–W1.3** FOR STATION WALL LAYOUTS.
7. SEE SHEETS **W1.4–W1.7** FOR EDMONDS COLLEGE WALL LAYOUTS.
8. SEE SHEETS **W2.1–W2.4** FOR REINFORCED CONCRETE WALL DETAILS.
9. SEE SHEETS **W3.1–W3.2** FOR STRUCTURAL EARTH WALL DETAILS.
10. SEE SHEETS **W4.1–W4.3** FOR MISCELLANEOUS WALL DETAILS.
11. SEE SHEETS **W5.1–W5.4** FOR SPECIAL POLE FOUNDATION DETAILS.

CALL BEFORE YOU DIG 1–800–424–5555

DESIGNER	DRAWN BY	CHECKED BY
XXX	XXX	XXX

NO.	REVISION COMMENTS	BY	REVIEW	DATE

11/2/21

community transit
Swift ORANGE LINE – 100% SUBMITTAL
WALL AND SPECIAL POLE FOUNDATION SITE PLANS
PROJECT SITE PLAN

TITLE

Otak
11241 Willows Road NE, Suite 200
Redmond, WA 98052
425.822.4446
www.otak.com

32880.H
PROJECT NUMBER

W0.1
DRAWING NO.

SHEET 404 OF 622

© 2021 OTAK, INC.

Plotted: Nov 02, 2021 – 4:33pm K:\Project\32800\32880H\CADD\ACAD\Dwg\W0.1.dwg Layout Name: W0.1

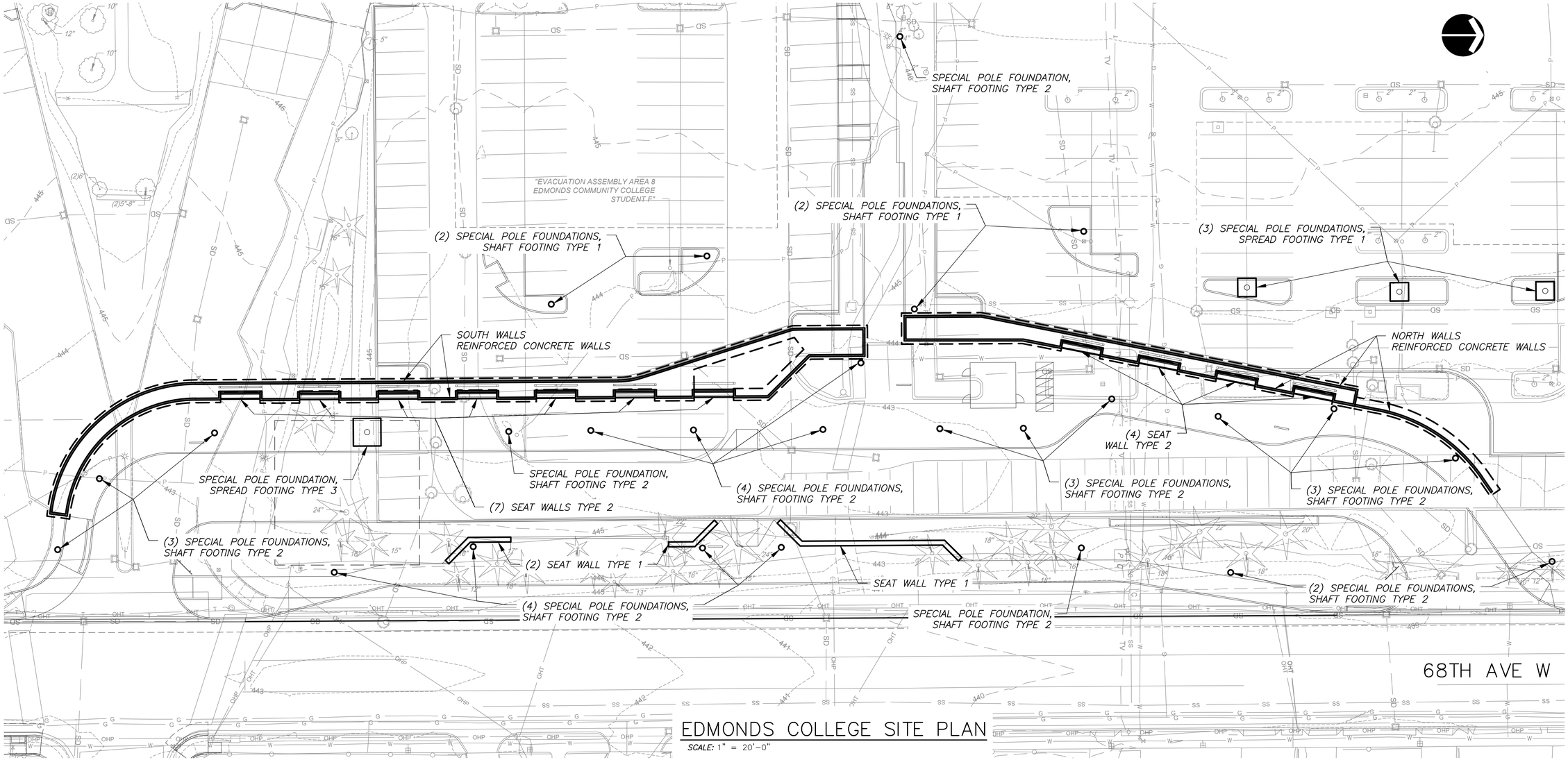

EDMONDS COLLEGE SITE PLAN

SCALE: 1" = 20'-0"

NOTES:

1. SEE SHEETS **W1.4–W1.7** FOR EDMONDS COLLEGE WALL PLAN AND ELEVATION LAYOUT INFORMATION.
2. SEE SHEET **W2.2** FOR WALL TYPE RCW 5, WALL TYPE RCW 6, SEAT WALL TYPE 1, AND SEAT WALL TYPE 2 DETAILS.
3. SEE SHEETS **W5.1–W5.4** FOR SPECIAL POLE FOUNDATION DETAILS.

CALL BEFORE YOU DIG 1-800-424-5555

NO.	REVISION COMMENTS	BY	REVIEW	DATE

DESIGNER XXX | DRAWN BY XXX | CHECKED BY XXX

ROBERT P. DOHERTY, STATE OF WASHINGTON, 43425, REGISTERED PROFESSIONAL ENGINEER

11/2/21

communitytransit
Swift ORANGE LINE – 100% SUBMITTAL
WALL AND SPECIAL POLE FOUNDATION SITE PLANS
EDMONDS COLLEGE TERMINUS SITE PLAN

TITLE

Otak

11241 Willows Road NE, Suite 200
Redmond, WA 98052
425.822.4446
www.otak.com

32880.H
PROJECT NUMBER

W0.2
DRAWING NO.

SHEET 405 OF 622

© 2021 OTAK, INC.

GENERAL NOTES

1. ALL WORK SHALL BE IN IN ACCORDANCE WITH THE WASHINGTON STATE DEPARTMENT OF TRANSPORTATION (WSDOT) STANDARD SPECIFICATIONS FOR ROAD, BRIDGE, AND MUNICIPAL CONSTRUCTION, 2021.

2. CONCRETE FOR SPECIAL SIGNAL POLE FOUNDATIONS SHALL BE CLASS 4000P.

3. ALL OTHER CONCRETE SHALL BE CLASS 4000.

4. REINFORCING STEEL SHALL BE EITHER ASTM A615, GRADE 60 OR ASTM A706, GRADE 60.

5. PROVIDE CONTROL JOINTS AT MAXIMUM 20' CENTERS IN THE EXPOSED SURFACES OF CONCRETE RETAINING WALLS AND STRUCTURAL SIDEWALK SECTIONS. JOINTS IN WALLS AT STATIONS SHALL LINE UP WITH JOINTING IN STATION PLATFORMS. SEE STATION PLATFORM AND CONCRETE ROADWAY JOINTING DETAIL ON SHEET **C3.400**.

6. STRUCTURAL EARTH WALLS AND GRAVITY BLOCK WALLS SHALL BE CONTRACTOR DESIGNED.

   6.1. STRUCTURAL EARTH WALL TYPE SHALL BE IN ACCORDANCE WITH SPECIAL PROVISION 6-13.

   6.2. GRAVITY BLOCK WALL TYPE SHALL BE IN ACCORDANCE WITH THE SPECIAL PROVISION 8-24.

   6.3. DESIGN SHALL BE IN ACCORDANCE WITH THE AASHTO LRFD BRIDGE DESIGN SPECIFICATIONS, 8TH EDITION; THE WSDOT GEOTECHNICAL DESIGN MANUAL, CURRENT EDITION; AND THE WSDOT BRIDGE DESIGN MANUAL, CURRENT EDITION.

   6.4. SEISMIC DESIGN SHALL BE IN ACCORDANCE WITH THE AASHTO GUIDE SPECIFICATIONS FOR LRFD SEISMIC BRIDGE DESIGN USING THE USGS 2014 SEISMIC HAZARD MAPS WITH SEVEN PERCENT PROBABILITY OF EXCEEDENCE IN 75 YEARS (1000 YEAR RETURN PERIOD) AND THE SITE COEFFICIENTS OR SITE-SPECIFIC COEFFICIENTS OR SITE-SPECIFIC PROCEDURE PROVIDED IN THE WSDOT DESIGN MEMORANDUM DATED JANUARY 8, 2017 AND THE WSDOT BDM, CHAPTER 4.

7. WALL TYPE DESIGNATIONS:

   7.1. RCW = REINFORCED CONCRETE WALL

   7.2. SEW = STRUCTURAL EARTH WALL

   7.3. GBW = GRAVITY BLOCK WALL

   7.4. TES = THICKENED EDGE SIDEWALK (STRUCTURAL SIDEWALK)

8. REINFORCED CONCRETE WALL NOTES

   8.1. DESIGN IN ACCORDANCE WITH AASHTO LRFD BRIDGE DESIGN SPECIFICATIONS, 8TH EDITION AND PROJECT GEOTECHNICAL REPORT DATED SEPTEMBER 13, 2021.

   8.2. DESIGN PARAMETERS:
   8.2.1. SOIL UNIT WEIGHT: 130 PCF

   8.2.2. SOIL FRICTION ANGLE: 35°

   8.2.3. FRICTION COEFFICIENT FOR SLIDING: 0.50

   8.2.4. EARTH PRESSURE COEFFICIENTS:

BACKSLOPE	ACTIVE, K_a	SEISMIC, K_{AE}	PASSIVE, K_p
LEVEL	0.25	0.15	3.25
2H:1V	0.37	0.60	3.25

   8.2.5. BEARING CAPACITIES:

EFFECTIVE WIDTH, B' (FT)	BEARING CAPACITY (KSF)	
	STRENGTH I	EXTREME I
3.0	2.7	5.3
4.0	3.5	6.5
5.0	3.9	7.6
6.0	4.4	8.8
7.0	4.9	9.9
8.0	5.3	11.0
9.0	5.8	12.1
10.0	6.2	13.1

9. SPECIAL POLE FOUNDATION NOTES

   9.1. DESIGN OF SPECIAL SIGNAL AND LIGHT POLE FOUNDATIONS IN ACCORDANCE WITH AASHTO LRFD SPECIFICATIONS FOR STRUCTURAL SUPPORTS FOR HIGHWAY SIGNS, LUMINARIES, AND TRAFFIC SIGNALS, 1ST EDITION AND PROJECT GEOTECHNICAL REPORT DATED SEPTEMBER 13, 2021.

   9.2. DESIGN PARAMETERS:
   9.2.1. BASIC WIND SPEED: 115 MPH.

   9.3. LIGHT POLE ANCHORAGE:
   9.3.1. ALL NEW POLES SHALL BE INSTALLED PER MANUFACTURER EXCEPT AT McCOLLUM PARK TERMINUS.

   9.3.2. INSTALL POLES AT MCCOLLUM PARK TERMINUS ACCORDING TO DETAIL SHOWN.

   9.3.3. ANCHOR BOLTS SHALL CONFORM TO THE REQUIREMENTS OF ASTM F1554, GRADE 55. NUTS SHALL CONFORM TO A563. WASHERS SHALL CONFORM TO F436.

10. HANDRAIL NOTES

   10.1. HORIZONTAL AND VERTICAL MEMBERS SHALL CONFORM TO THE REQUIREMENTS OF ASTM A120.

   10.2. BASE PLATES SHALL CONFORM TO THE REQUIREMENTS OF ASTM A36.

   10.3. BOLTS SHALL CONFORM TO THE REQUIREMENTS OF A307. NUTS SHALL CONFORM TO A563. WASHERS SHALL CONFORM TO F436.

   10.4. RESIN BONDING MATERIAL SHALL BE A TWO COMPONENT EPOXY RESIN CONFORMING TO TYPE IV ASTM C 881.

   10.5. WELDING SHALL CONFORM TO AMERICAN WELDING SOCIETY STRUCTURAL WELDING CODE AWS D1.1-72.

   10.6. AFTER FABRICATION EACH SECTION OF RAILING SHALL BE HOT-DIPPED GALVANIZED WITH A MINIMUM ZINC COATING OF 2 OUNCES PER SQUARE FOOT. ALL BURRS AND SHARP EDGES SHALL BE REMOVED PRIOR TO GALVANIZING. FIELD WELDS SHALL BE GALVANIZED WITH "GALVALLOY" OR APPROVED EQUIVALENT. PAINTING OF WELDS WILL NOT BE PERMITTED.

DESIGNER	DRAWN BY	CHECKED BY
XXX	XXX	XXX

NO.	REVISION COMMENTS	BY	REVIEW	DATE
1	LU Submittal, Rev 1			3/22/2022

ROBERT P. DOHERTY
STATE OF WASHINGTON
43425
REGISTERED
PROFESSIONAL ENGINEER

11/2/21

communitytransit
Swift ORANGE LINE – 100% SUBMITTAL
WALL AND SPECIAL POLE FOUNDATION SITE PLANS
GENERAL NOTES

TITLE

Otak
11241 Willows Road NE, Suite 200
Redmond, WA 98052
425.822.4446
www.otak.com

32880.H
PROJECT NUMBER

W0.5
DRAWING NO.

SHEET 408 OF 622

© 2021 OTAK, INC.

CALL BEFORE YOU DIG 1-800-424-5555

Plotted: Nov 02, 2021 - 4:34pm K:\Project\32800\32880H\CADD\ACAD\Dwg\W0.1.dwg Layout Name: W0.5

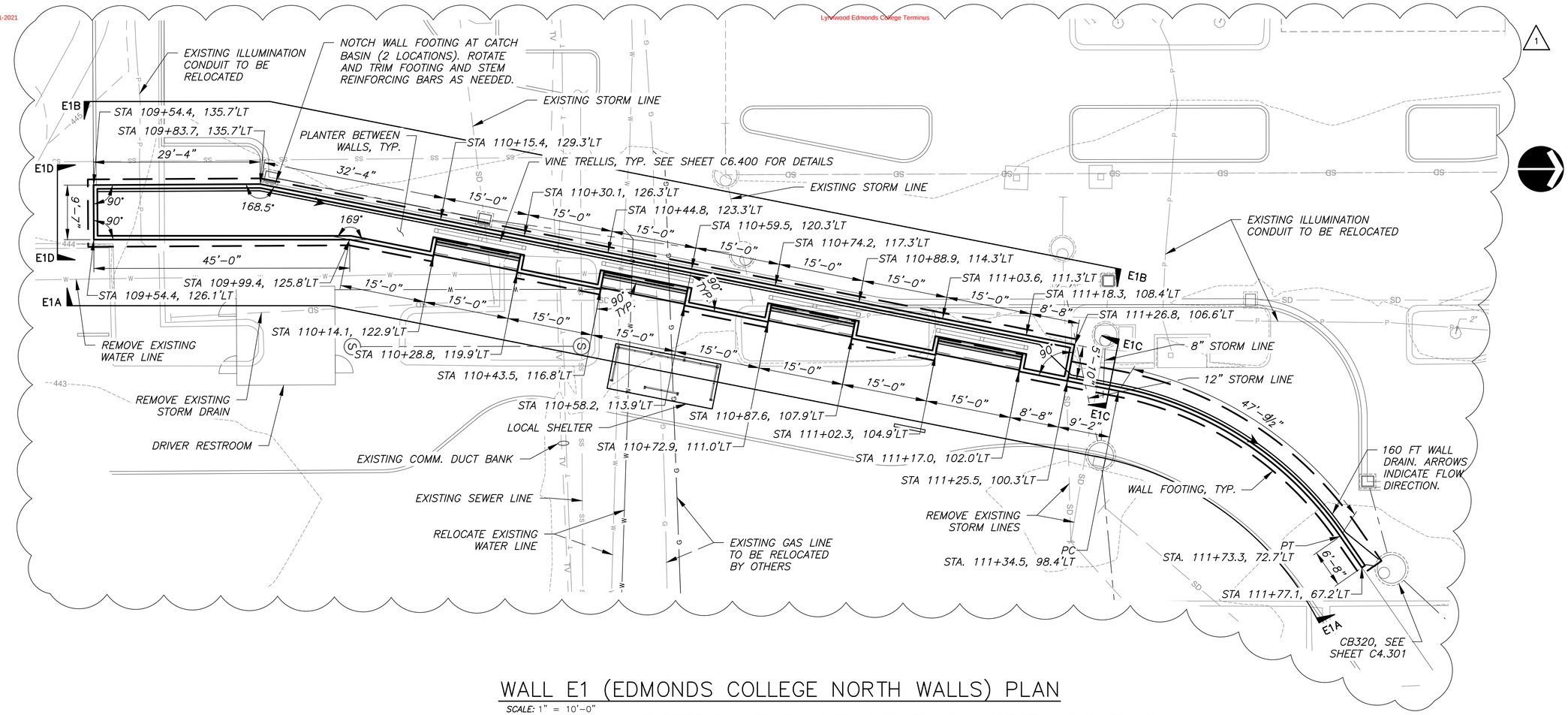

WALL E1 (EDMONDS COLLEGE NORTH WALLS) PLAN

SCALE: 1" = 10'-0"

STATION–OFFSET CALLOUTS REFERENCE CONSTRUCTION CENTERLINE FOR EDMONDS COLLEGE TERMINUS AT 68TH AVE W SEE SHEET C3.300 FOR CONSTRUCTION CENTERLINE ALIGNMENT.

NOTE: EXISTING UTILITIES ARE CALLED OUT FOR REFERENCE ONLY. SEE C2.301 AND C4.301 FOR ACTUAL UTILITY REMOVAL AND RELOCATION INFORMATION

WALL TYPE: RCW 5, RCW 6, AND SEAT WALL TYPE 2
(SEE ELEVATION VIEWS ON FOLLOWING SHEET)

CALL BEFORE YOU DIG 1–800–424–5555

NO.	REVISION COMMENTS	BY	REVIEW	DATE
1	ADDENDUM #1 – CONTOURS	JLL	BD	11/16/2022

DESIGNER XXX | DRAWN BY XXX | CHECKED BY XXX

ROBERT P. DOHERTY — STATE OF WASHINGTON — 43425 — REGISTERED PROFESSIONAL ENGINEER

11/16/21

TITLE

communitytransit

Swift ORANGE LINE – 100% SUBMITTAL

TERMINI WALL LAYOUT

WALL E1 LAYOUT - NORTH WALLS AT EDMONDS COLLEGE TERMINUS

Otak

11241 Willows Road NE, Suite 200
Redmond, WA 98052
425.822.4446
www.otak.com

32880.H
PROJECT NUMBER

W1.4
DRAWING NO.

SHEET 412 OF 622

© 2021 OTAK, INC.

Plotted: Nov 16, 2021 – 12:34pm C:\temp\AcPublish_18428\W1.7–W1.10.dwg Layout Name: W1.4

Preliminary Submittal, Not for Construction 12/2/2022

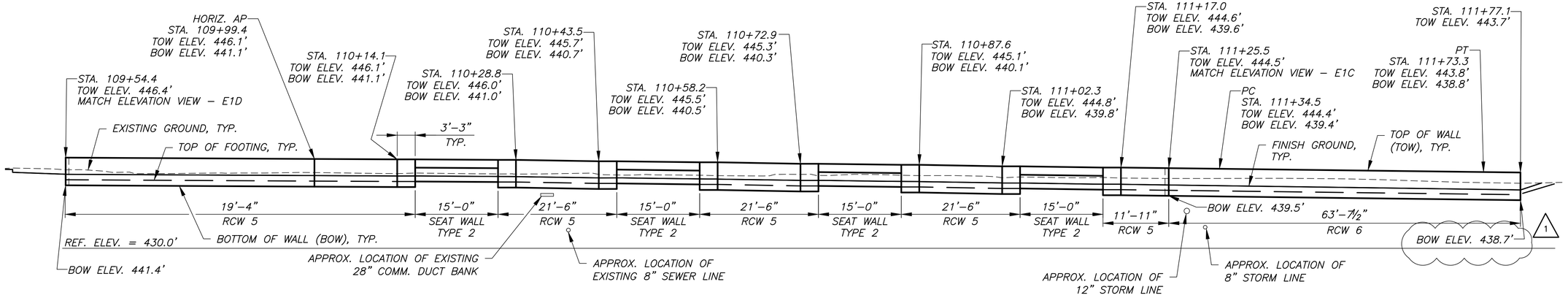

ELEVATION VIEW – E1A

SCALE: 1" = 10'–0"

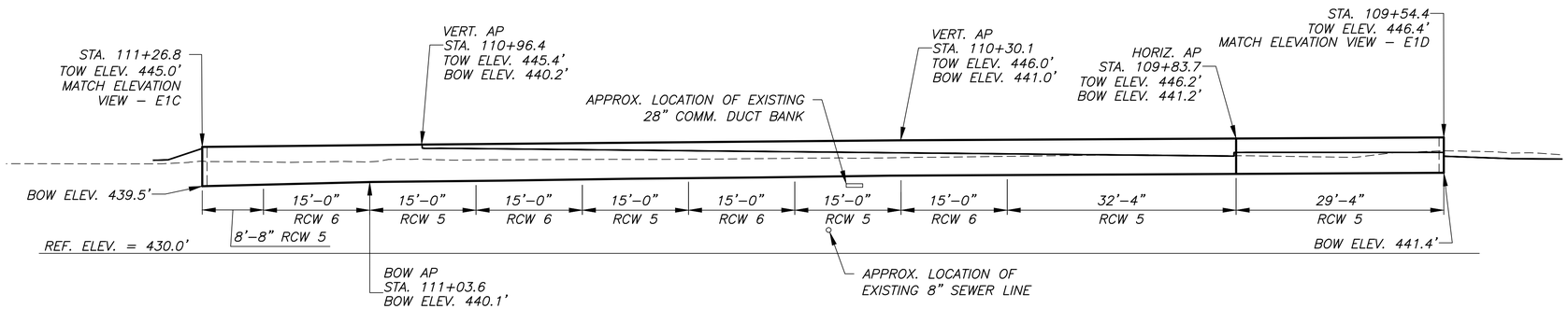

ELEVATION VIEW – E1B

SCALE: 1" = 10'–0"

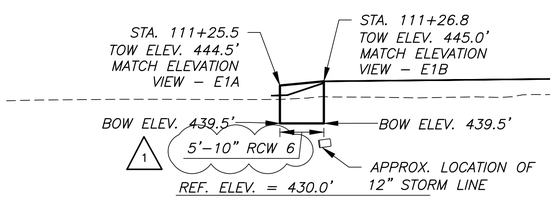

ELEVATION VIEW – E1C

SCALE: 1" = 10'–0"

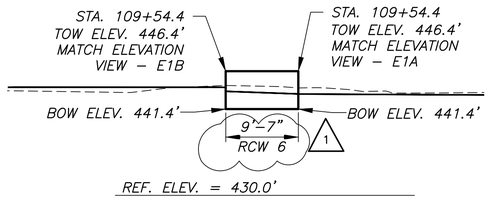

ELEVATION VIEW – E1D

SCALE: 1" = 10'–0"

NO.	REVISION COMMENTS	BY	REVIEW	DATE
1	ADDENDUM #1 – TEXT EDITS	JLL	BD	11/16/2021

DESIGNER XXX
DRAWN BY XXX
CHECKED BY XXX



11/16/21

community transit
Swift ORANGE LINE – 100% SUBMITTAL

TERMINI WALL LAYOUT
WALL E1 SECTIONS - NORTH WALLS AT
EDMONDS COLLEGE TERMINUS

TITLE

Otak
11241 Willows Road NE, Suite 200
Redmond, WA 98052
425.822.4446
www.otak.com

32880.H
PROJECT NUMBER

W1.5
DRAWING NO.

SHEET 413 OF 622

© 2021 OTAK, INC.

CALL BEFORE YOU DIG 1–800–424–5555

Plotted: Nov 16, 2021 – 12:35pm C:\temp\AcPublish_18428\W1.7–W1.10.dwg Layout Name: W1.5

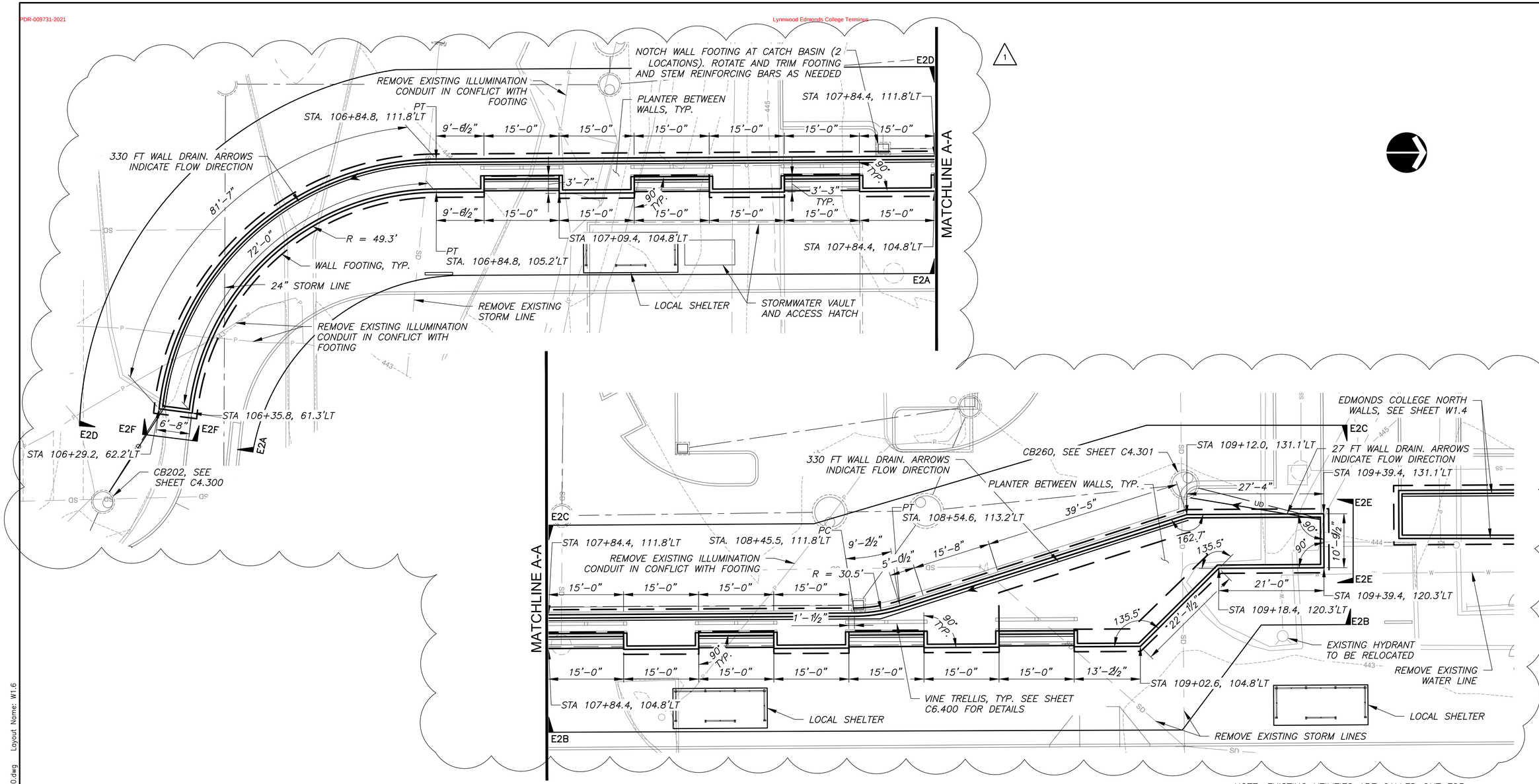

NOTE: EXISTING UTILITIES ARE CALLED OUT FOR REFERENCE ONLY. SEE C2.300–C2.301 AND C4.300–C4.301 FOR ACTUAL UTILITY REMOVAL AND RELOCATION INFORMATION.

WALL E2 (EDMONDS COLLEGE SOUTH WALLS) PLAN

SCALE: 1" = 10'-0"

STATION–OFFSET CALLOUTS REFERENCE CONSTRUCTION CENTERLINE FOR EDMONDS COLLEGE TERMINUS AT 68TH AVE W SEE SHEET C3.300 FOR CONSTRUCTION CENTERLINE ALIGNMENT.

WALL TYPE: RCW 5, RCW 6, AND SEAT WALL TYPE 2 (SEE ELEVATION VIEWS ON FOLLOWING SHEET)

CALL BEFORE YOU DIG 1–800–424–5555

DESIGNER	DRAWN BY	CHECKED BY
XXX	XXX	XXX

NO.	REVISION COMMENTS	BY	REVIEW	DATE
1	ADDENDUM #1 – CONTOURS	JLL	BD	11/16/21

ROBERT P. DOHERTY, STATE OF WASHINGTON, 43425, REGISTERED PROFESSIONAL ENGINEER

11/16/21

communitytransit Swift ORANGE LINE – 100% SUBMITTAL
TERMINI WALL LAYOUT
WALL E2 LAYOUT - SOUTH WALLS AT EDMONDS COLLEGE TERMINUS

TITLE

Otak
11241 Willows Road NE, Suite 200
Redmond, WA 98052
425.822.4446
www.otak.com

32880.H
PROJECT NUMBER

W1.6
DRAWING NO.

SHEET 414 OF 622

© 2021 OTAK, INC.

Plotted: Nov 16, 2021 – 12:35pm C:\temp\AcPublish_18428\W1.7–W1.10.dwg Layout Name: W1.6

PDR-009731-2021

Lynnwood Edmonds Extension

100% Submittal, Rev 3 3/22/2022

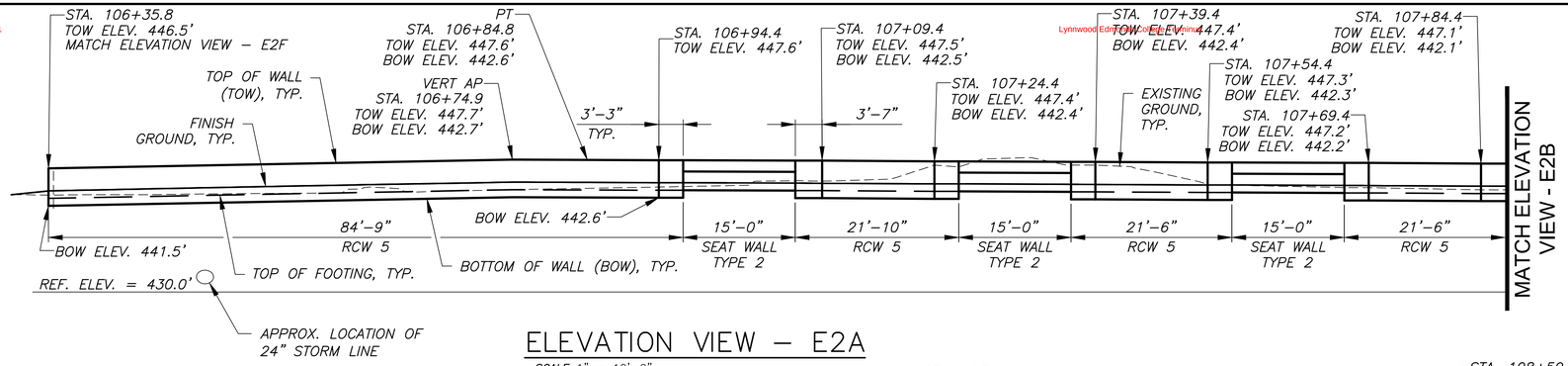

ELEVATION VIEW – E2A

SCALE: 1" = 10'–0"

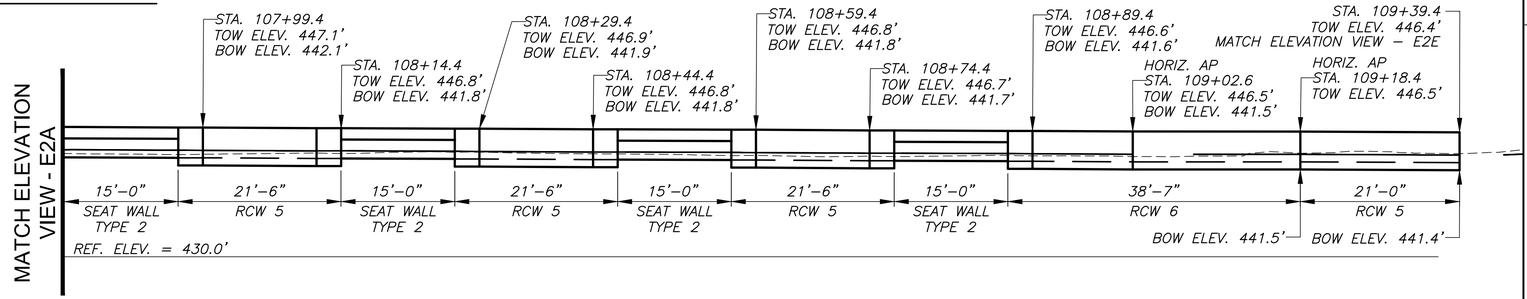

ELEVATION VIEW– E2B

SCALE: 1" = 10'–0"

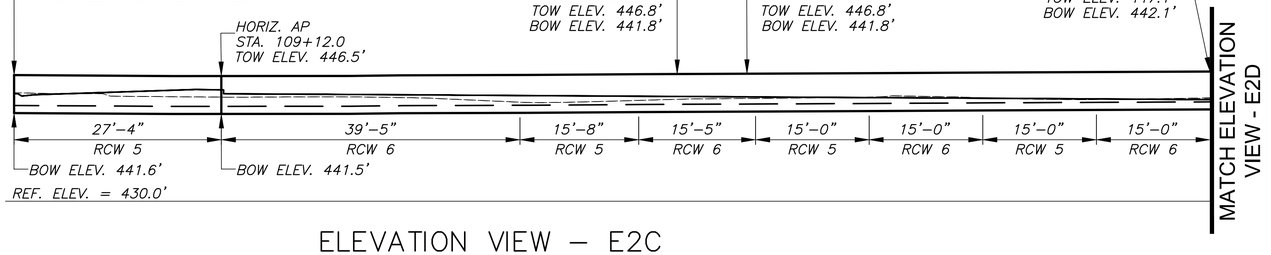

ELEVATION VIEW – E2C

SCALE: 1" = 10'–0"

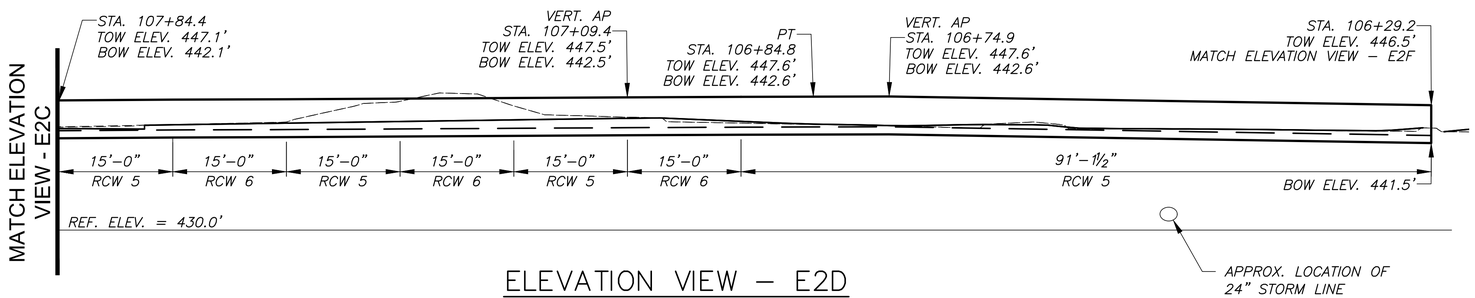

ELEVATION VIEW – E2D

SCALE: 1" = 10'–0"

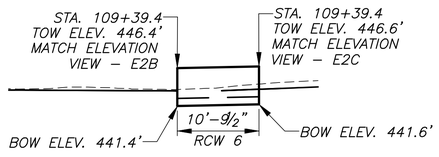

ELEVATION VIEW – E2E

SCALE: 1" = 10'–0"

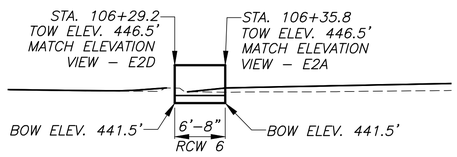

ELEVATION VIEW – E2F

SCALE: 1" = 10'–0"

NO.	REVISION COMMENTS	BY	REVIEW	DATE
DESIGNER XXX		DRAWN BY XXX	CHECKED BY XXX	

ROBERT P. DOHERTY — STATE OF WASHINGTON — 43425 — REGISTERED PROFESSIONAL ENGINEER

11/2/21

TITLE

communitytransit

Swift ORANGE LINE – 100% SUBMITTAL

TERMINI WALL LAYOUT

WALL E2 SECTIONS - SOUTH WALLS AT EDMONDS COLLEGE TERMINUS

Otak
11241 Willows Road NE, Suite 200
Redmond, WA 98052
425.822.4446
www.otak.com

32880.H
PROJECT NUMBER

W1.7
DRAWING NO.

SHEET 415 OF 622

© 2021 OTAK, INC.

CALL BEFORE YOU DIG 1–800–424–5555

Plotted: Nov 02, 2021 – 4:37pm K:\Project\32800\32880H\CADD\ACAD\Dwg\W1.7–W1.10.dwg Layout Name: W1.7

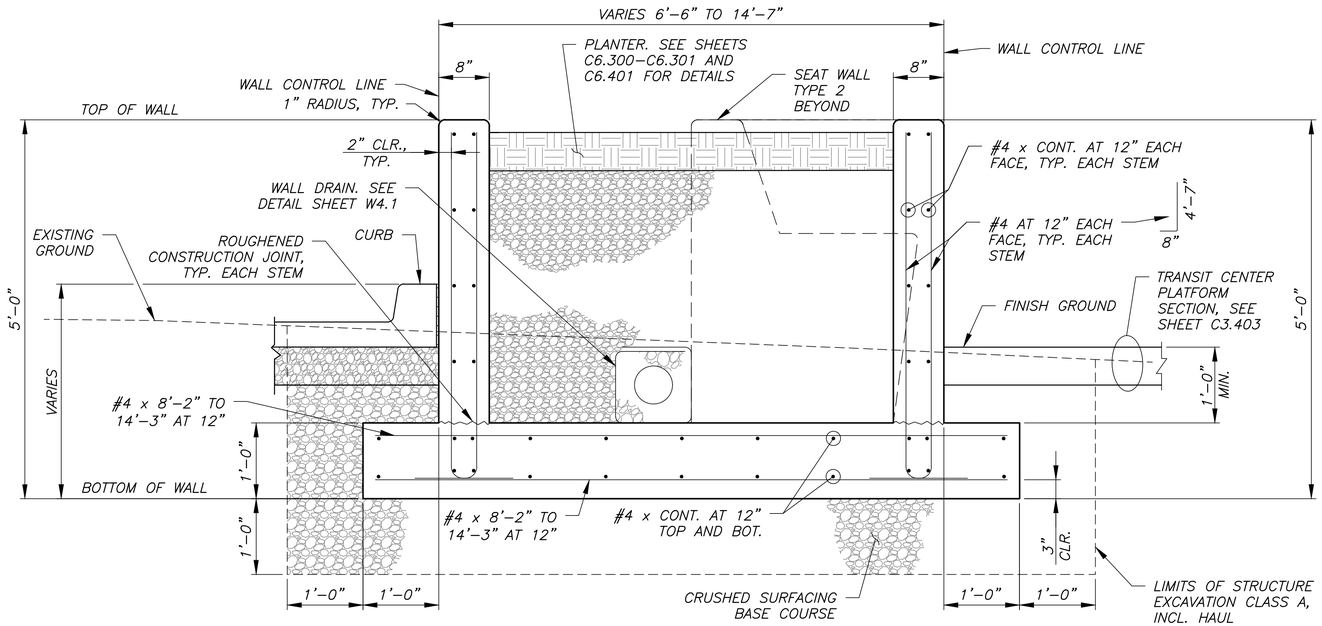

TYPICAL SECTION – WALL TYPE RCW 5

SCALE: 1" = 1'–0"
LOCATED AT EDMONDS COLLEGE TERMINUS
SEE SHEETS W1.4 – W1.7 FOR WALL LAYOUT

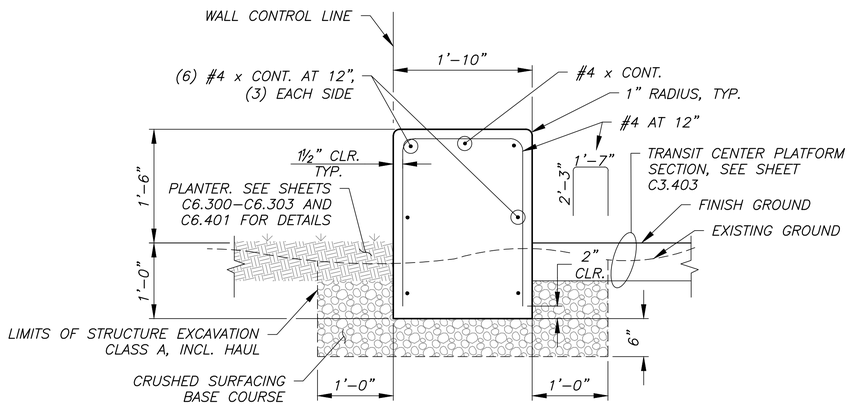

TYPICAL SECTION – SEAT WALL TYPE 1

SCALE: 1" = 1'–0"
LOCATED AT EDMONDS COLLEGE AND MCCOLLUM PARK TERMINI
SEE SHEETS C3.300–C3.303 FOR WALL LAYOUT

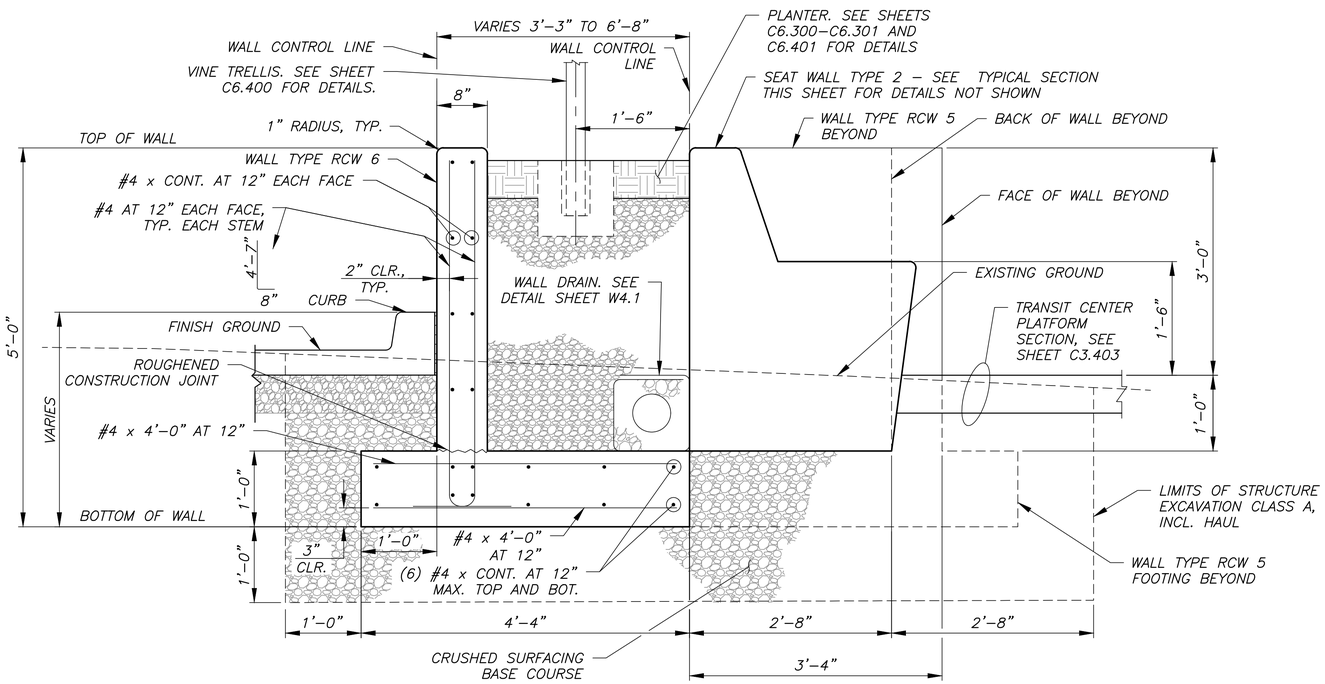

TYPICAL SECTION – WALL TYPE RCW 6 AND SEAT WALL TYPE 2

SCALE: 1" = 1'–0"
LOCATED AT EDMONDS COLLEGE TERMINUS
SEE SHEETS W1.4–W1.7 FOR WALL LAYOUT

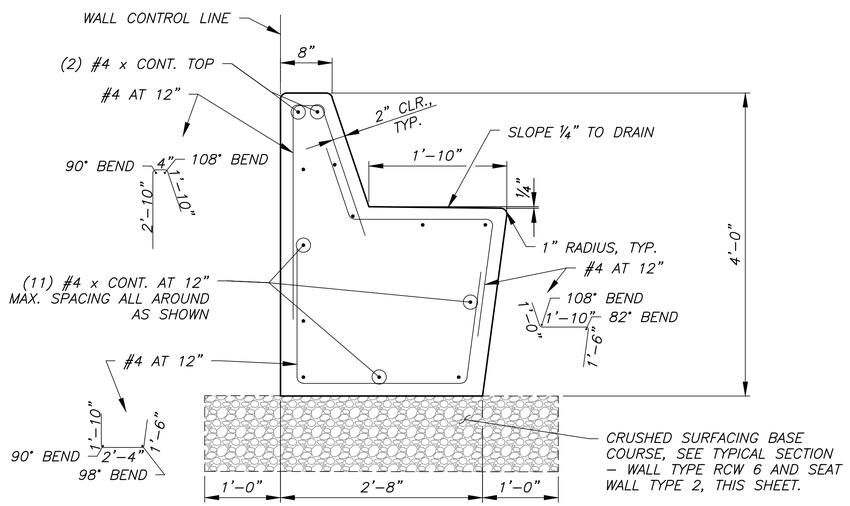

TYPICAL SECTION – SEAT WALL TYPE 2

SCALE: 1" = 1'–0"
LOCATED AT EDMONDS COLLEGE TERMINUS
SEE SHEETS W1.4–W1.7 FOR WALL LAYOUT

CALL BEFORE YOU DIG 1–800–424–5555

NO.	REVISION COMMENTS	BY	REVIEW	DATE

DESIGNER

DRAWN BY

CHECKED BY

ROBERT P. DOHERTY
STATE OF WASHINGTON
43425
REGISTERED
PROFESSIONAL ENGINEER

11/2/21

communitytransit
Swift ORANGE LINE – 100% SUBMITTAL
REINFORCED CONCRETE WALL DETAILS
3 OF 5

TITLE

Otak
11241 Willows Road NE, Suite 200
Redmond, WA 98052
425.822.4446
www.otak.com

32880.H
PROJECT NUMBER

W2.2
DRAWING NO.

SHEET 417 OF 622

© 2021 OTAK, INC.

Plotted: Nov 02, 2021 – 4:38pm K:\Project\32800\32880H\CADD\ACAD\Dwg\W2.1–W2.3.dwg Layout Name: W2.3

PDR-009731-2021

Lynnwood Edmonds College Terminus

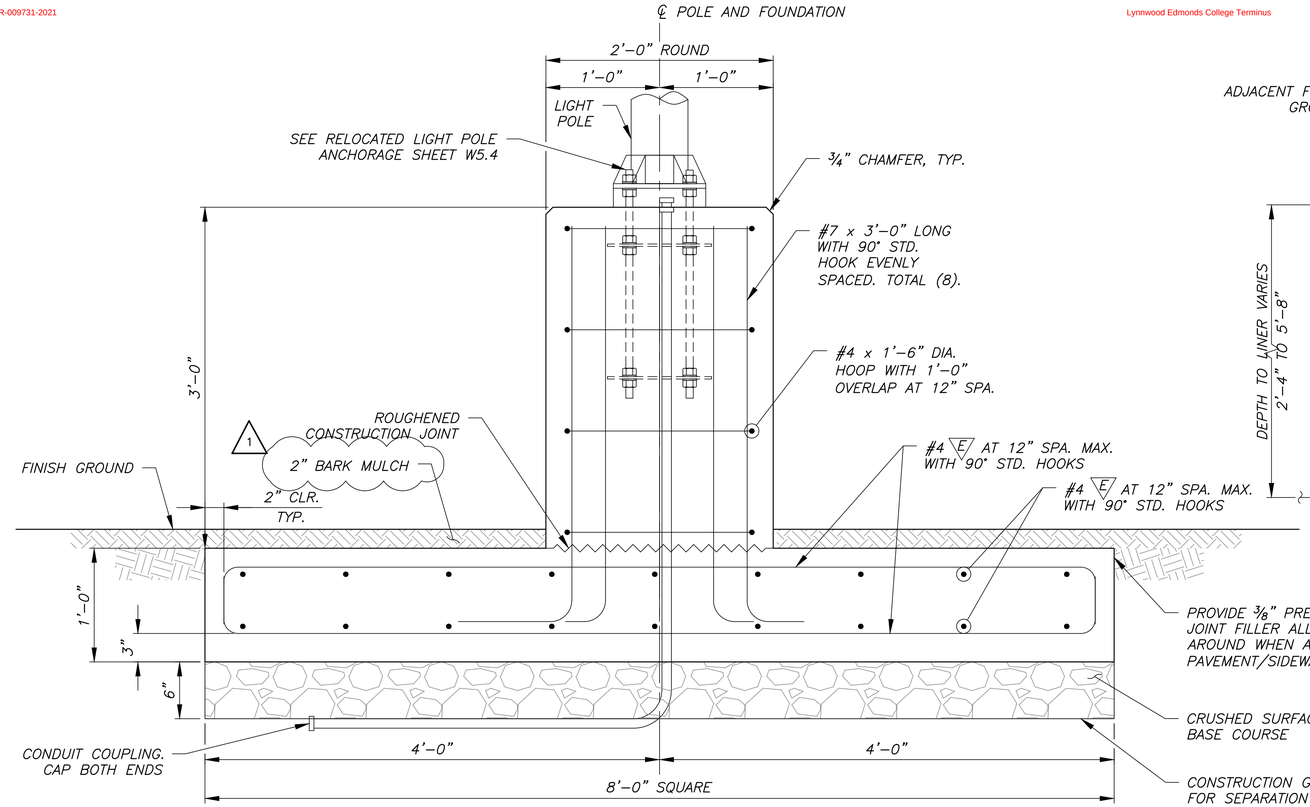

POLE SPREAD FOOTING TYPE 1

SCALE: 1 1/2" = 1'–0"

PARKING LOT LIGHT POLES AT EDMONDS COLLEGE LUM. POLE NUMBERS IL27, IL28, & IL29

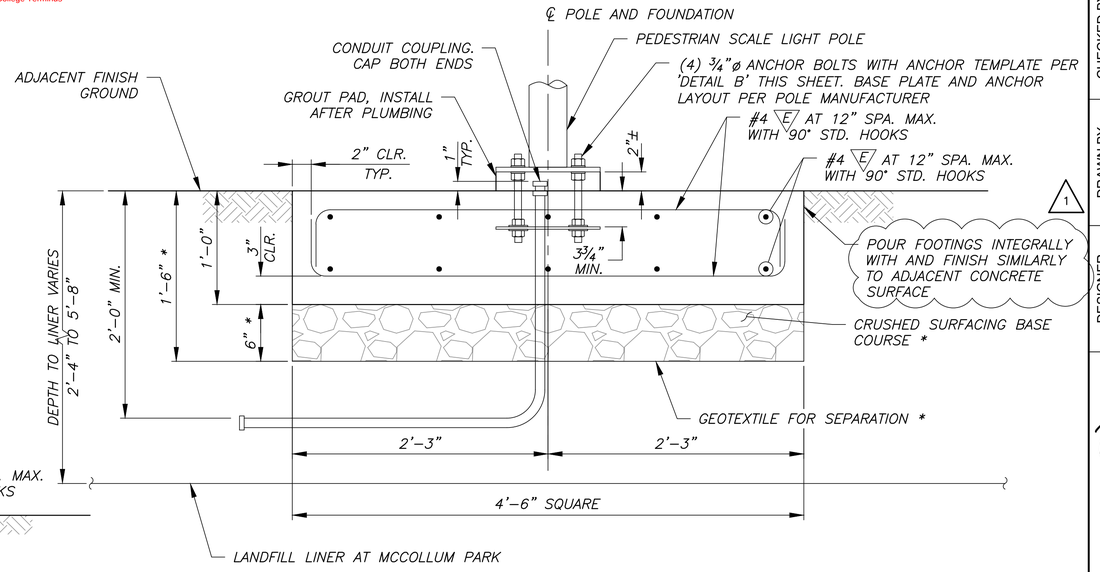

POLE SPREAD FOOTING TYPE 2

SCALE: 1 1/2" = 1'–0"

PEDESTRIAN SCALE LIGHT POLES LOCATED AT MCCOLLUM PARK.

* AT MCCOLLUM PARK, UNDERLAY SPREAD FOOTINGS WITH 6" STRUCTURAL FILL FOLLOWED BY A LAYER OF GEOGRID REINFORCING. PROVIDE 6" OF STRUCTURAL FILL UNDERNEATH GEOGRID AND REPEAT WITH (2) ADDITIONAL LAYERS OF ALTERNATING GEOGRID AND 6" STRUCTURAL FILL AS LINER DEPTH ALLOWS. EXTEND STRUCTURAL FILL AND GEOGRID TO A MINIMUM DISTANCE EQUAL TO HALF OF FOOTING WIDTH OUTSIDE FOOTING PERIMETER.

1

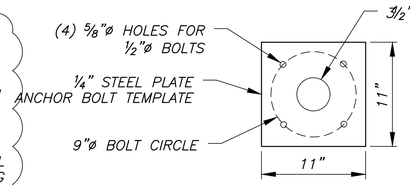

DETAIL B

SCALE: 1–1/2" = 1'–0"

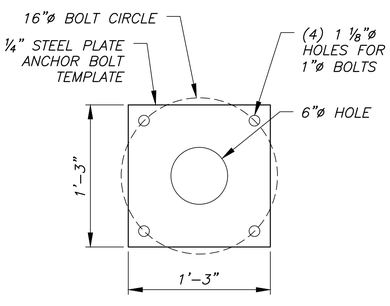

DETAIL A

SCALE: 1 1/2" = 1'–0"

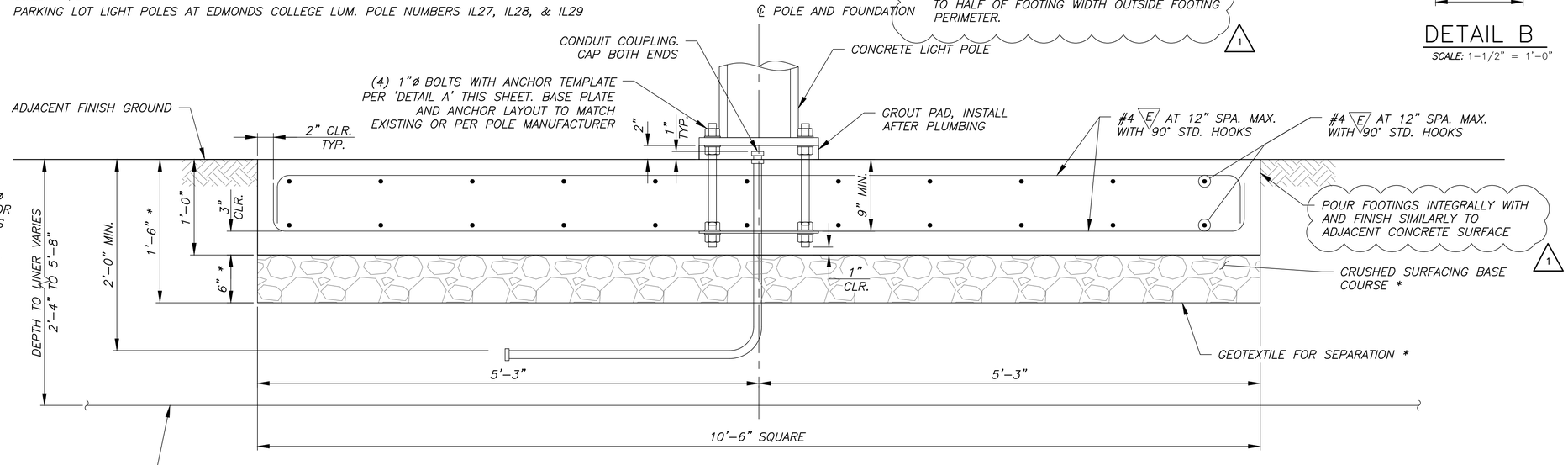

POLE SPREAD FOOTING TYPE 3

SCALE: 1 1/2" = 1'–0"

LIGHT POLES AT EDMONDS COLLEGE LUM. POLE NUMBERS IL19

LIGHT POLES AT MCCOLLUM PARK LUM. POLE NUMBERS IL1, IL4, IL6, IL9, IL13, IL15, IL18, IL29, IL30, IL31, IL32, IL33, & IL34

NO.	REVISION COMMENTS	BY	REVIEW	DATE
1	ADDENDUM #1 – FDN DETAILS	JLL	BD	11/16/21

DESIGNER XXX | DRAWN BY XXX | CHECKED BY XXX

Plan Review Submittal, 12/2/2022

ROBERT P. DOHERTY — STATE OF WASHINGTON — 43425 — REGISTERED PROFESSIONAL ENGINEER

11/15/21

100% SUBMITTAL

community transit
Swift ORANGE LINE – 100% SUBMITTAL
POLE FOUNDATION DETAILS
3 OF 4

TITLE

Otak
11241 Willows Road NE, Suite 200
Redmond, WA 98052
425.822.4446
www.otak.com

32880.H
PROJECT NUMBER

W5.3
DRAWING NO.

SHEET 427 OF 622

© 2021 OTAK, INC.

CALL BEFORE YOU DIG 1–800–424–5555

Plotted: Nov 16, 2021 – 2:01pm K:\Project\32800\32880H\CADD\ACAD\Dwg\W5.1-W5.3.dwg Layout Name: W5.3

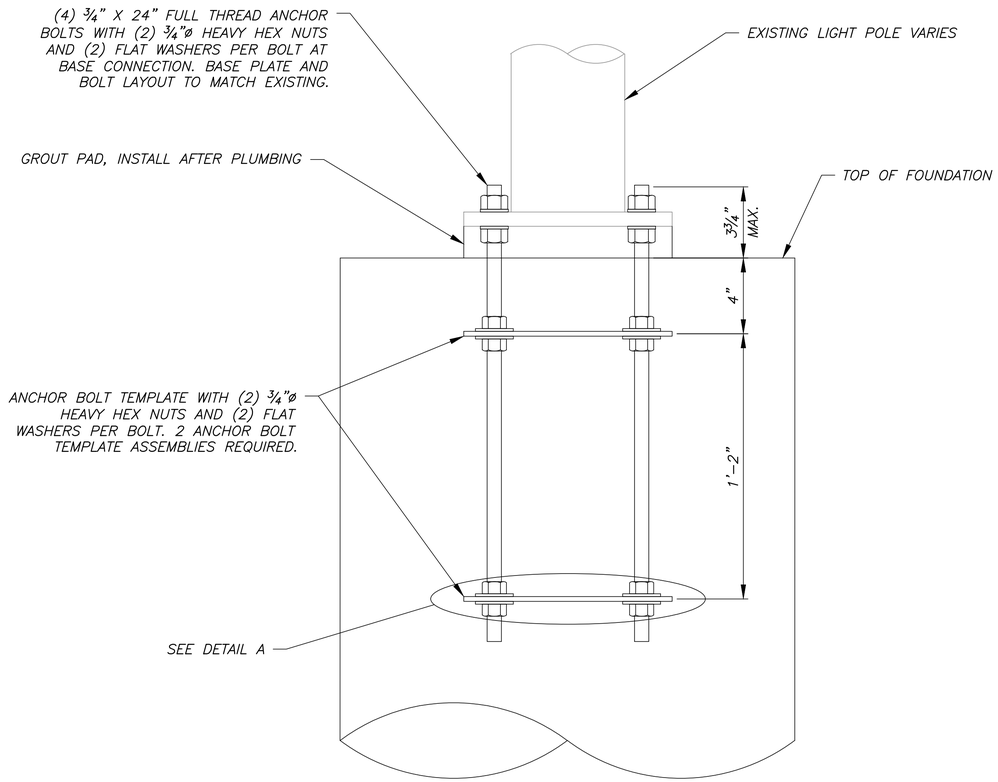

RELOCATED LIGHT POLE ANCHORAGE

SCALE: 3" = 1'-0"

APPLIES AT LIGHT POLE SHAFT FOUNDATION TYPE 1 AND LIGHT POLE SPREAD FOOTING TYPE 1 AND LIGHT POLE SHAFT FOUNDATION TYPE 2

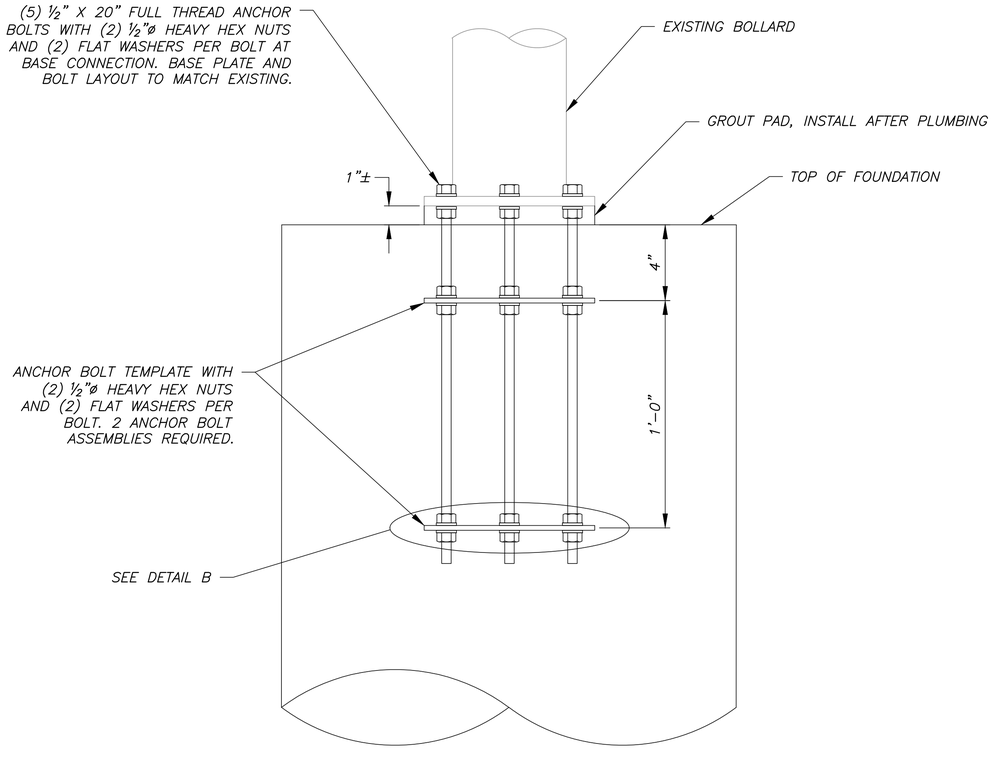

RELOCATED BOLLARD ANCHORAGE

SCALE: 3" = 1'-0"

APPLIES AT LIGHT POLE SHAFT FOUNDATION TYPE 2

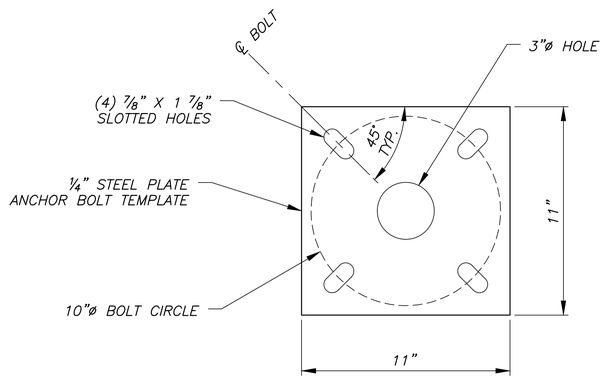

DETAIL A

SCALE: 3" = 1'-0"

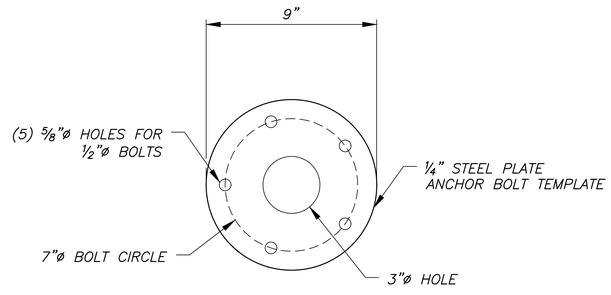

DETAIL B

SCALE: 3" = 1'-0"

CALL BEFORE YOU DIG 1-800-424-5555

DESIGNER	DRAWN BY	CHECKED BY
XXX	XXX	XXX

NO.	REVISION COMMENTS	BY	REVIEW	DATE
1	100% Submittal, PDR			3/22/2022

ROBERT P. DOHERTY
STATE OF WASHINGTON
43425
REGISTERED
PROFESSIONAL ENGINEER

11/2/21

100% SUBMITTAL

communitytransit

Swift ORANGE LINE

POLE FOUNDATION DETAILS
4 OF 4

TITLE

Otak
11241 Willows Road NE, Suite 200
Redmond, WA 98052
425.822.4446
www.otak.com

32880.H
PROJECT NUMBER

W5.4
DRAWING NO.

SHEET 428 OF 622

© 2021 OTAK, INC.

Plotted: Nov 02, 2021 - 4:39pm K:\Project\32800\32880H\CADD\ACAD\Dwg\W5.1-W5.3.dwg Layout Name: W5.4

ARCHITECTURAL SHEET INDEX

ARCHITECTURE

A1.100	TYPICAL SHELTER AND AMENITIES ISOMETRIC VIEW
A1.101	TYPICAL SHELTER PLAN AND ELEVATION
A1.200	MODIFIED SHELTER AND AMENITIES ISOMETRIC VIEW
A1.201	MODIFIED SHELTER AND ELEVATION
A1.400	SHELTER EXPLODED AXON
A1.401	SHELTER GA - ELEVATION AND RCP
A1.402	SHELTER GA - ENLARGED ELEVATIONS
A1.403	SHELTER BEAM AMENDMENT DETAILS
A1.404	BEAM AMENDMENT AXONS
A1.405	ROOF GLAZING
A1.406	WINDSCREENS
A1.407	WINDSCREEN AT SLOPE
A1.408	WINDSCREEN DETAILS
A1.409	ICONIC MARKER ASSEMBLY
A1.410	ICONIC MARKER DETAILS
A1.411	ICONIC MARKER DETAILS
A1.413	INFORMATION CABINET
A1.414	REAL TIME PASSENGER INFORMATION DISPLAY
A2.100	SHARED GREEN AND ORANGE LINE SHELTER AND AMENITIES ISOMETRIC VIEW
A2.101	SHARED GREEN AND ORANGE LINE PLATFORM PLAN AND ELEVATION
A2.200	RETROFIT STATION NAME SIGN
A2.201	RETROFIT ICONIC MARKER
A2.202	RETROFIT ICONIC MARKER DETAIL
A2.203	RETROFIT RTPI
A3.200	LYNNWOOD TRANSIT CENTER RETROFITS
A3.201	LYNNWOOD TRANSIT CENTER DETAILS

ARCHITECTURAL SYMBOLS

A1.201 ■ 1 — STATION ELEVATION

A541 — STATION ELEVATION

1 / A101 — STATION SECTION

TYP 1 / A511 — DETAIL SECTION

TYP 1 / A511 — DETAIL CALLOUT

VERTICAL ELEVATION

05 5000-A — SPECIFICATION KEYNOTE*

*LETTER IS A DESIGNATOR AND IS NOT LINKED TO A SPECIFIC SPEC ITEM

08 — KEYNOTE

GRID LINE

SLOPE 4:12 — SLOPE ARROW (SLOPE AS INDICATED)

A — ROOF GLAZING PANELS

ARCHITECTURAL ABBREVIATIONS

@	AT
AB	ANCHOR BOLT
AC	ASPHALTIC CONCRETE
ALUM	ALUMINUM
BLDG	BUILDING
BO	BOTTOM OF
CB	CATCH BASIN
CFCI	CONTRACTOR FURNISHED CONTRACTOR INSTALLED
CJ	CONTROL JOINT
CL	CENTER LINE
CLG	CEILING
CLR	CLEAR
COL	COLUMN
CONC	CONCRETE
CONT	CONTINUOUS
DBL	DOUBLE
DIAG	DIAGONAL
DIA	DIAMETER
DN	DOWN
DS	DOWNSPOUT
DTL	DETAIL
DWG	DRAWING
(E)	EXISTING
EA	EACH
EJ	EXPANSION JOINT
EL, ELEV	ELEVATION
ELEC	ELECTRICAL
EQ	EQUAL
EW	EACH WAY
EXT	EXTERIOR
FD	FLOOR DRAIN
FO	FACE OF
FTG	FOOTING
GA	GENERAL ARRANGEMENT
HGT	HEIGHT
HORIZ	HORIZONTAL
HR	HANDRAIL
IB	INBOUND DIRECTION OF TRAVEL
JT	JOINT
LOC	LOCATION
MAX	MAXIMUM
MECH	MECHANICAL
MFR	MANUFACTURER
MIN	MINIMUM
MISC	MISCELLANEOUS
MTL	METAL
NTS	NOT TO SCALE
OB	OUTBOUND DIRECTION OF TRAVEL ON CENTER
OC	OUTSIDE DIMENSION
OD	OWNER FURNISHED CONTRACTOR INSTALLED
OFCI	OWNER FURNISHED OWNER INSTALLED
OFOI	OPPOSITE
OPP	POWER CONTROL CABINET
PCC	ROOF DRAIN
RD	RIGHT OF WAY
ROW	REAL TIME PASSENGER INFORMATION
RTPI	REVEAL
RVL	STAND ALONE FARE TRANSACTION PROCESSOR
SAFTP	STORM DRAIN
SD	SHEET
SHT	SIMILAR
SIM	SPECIFICATIONS
SPECS	SQUARE FOOT
SQFT, SF	STAINLESS STEEL
S.S.	STANDARD
STD	STRUCTURAL
STRUC	TEMPERED
T	TOP & BOTTOM
T&B	TEMPORARY
TEMP	TOP OF
TO	TOP OF CONCRETE
TOC	TOP OF WALL
TOW	TOP OF STRUCTURE
TOS	TYPICAL
TYP	UNLESS NOTED OTHERWISE
UNO	VERIFY
VFY	

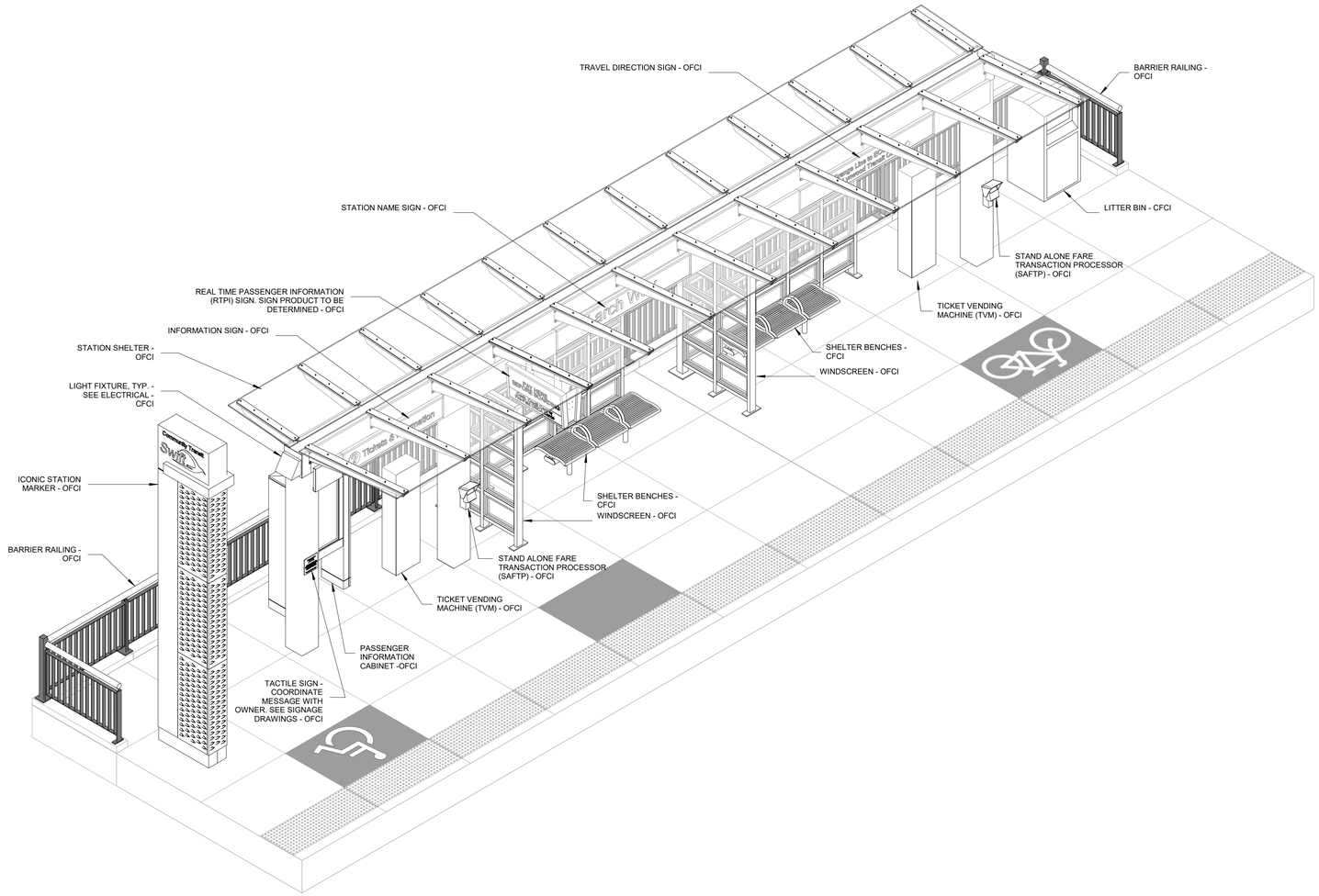

1 AXON - ORANGE LINE SHELTER & AMENITIES

DESIGNER	DRAWN BY		CHECKED BY		
SC & NT	SC & NT		KGT		
NO.	REVISION COMMENTS	BY	REVIEW	DATE	

PDR Submittal, 3/22/2022

PIVOT ARCHITECTURE

13052 REGISTERED ARCHITECT
KARI GREENE TURNER
STATE OF WASHINGTON

community transit
Swift ORANGE LINE - 100% SUBMITTAL

ORANGE LINE PLATFORM ARCHITECTURAL PLANS
TYPICAL SHELTER AND AMENITIES ISOMETRIC VIEW

TITLE

Otak
11241 Willows Road NE, Suite 200
Redmond, WA 98052
425.822.4446
www.otak.com

32880.H
PROJECT NUMBER

A1.100
DRAWING NO.

SHEET 429 OF 622

© 2021 OTAK, INC.

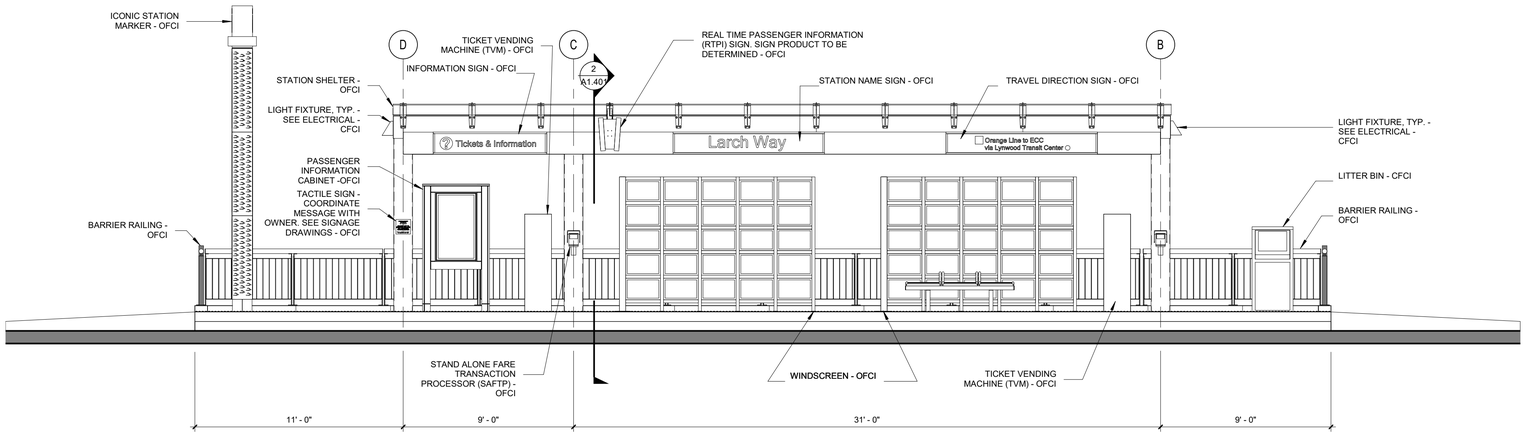

3 PLATFORM ELEVATION
1/4" = 1'-0"

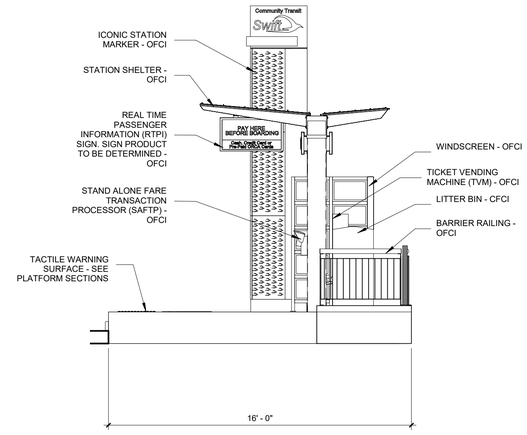

2 PLATFORM SIDE ELEVATION
1/4" = 1'-0"

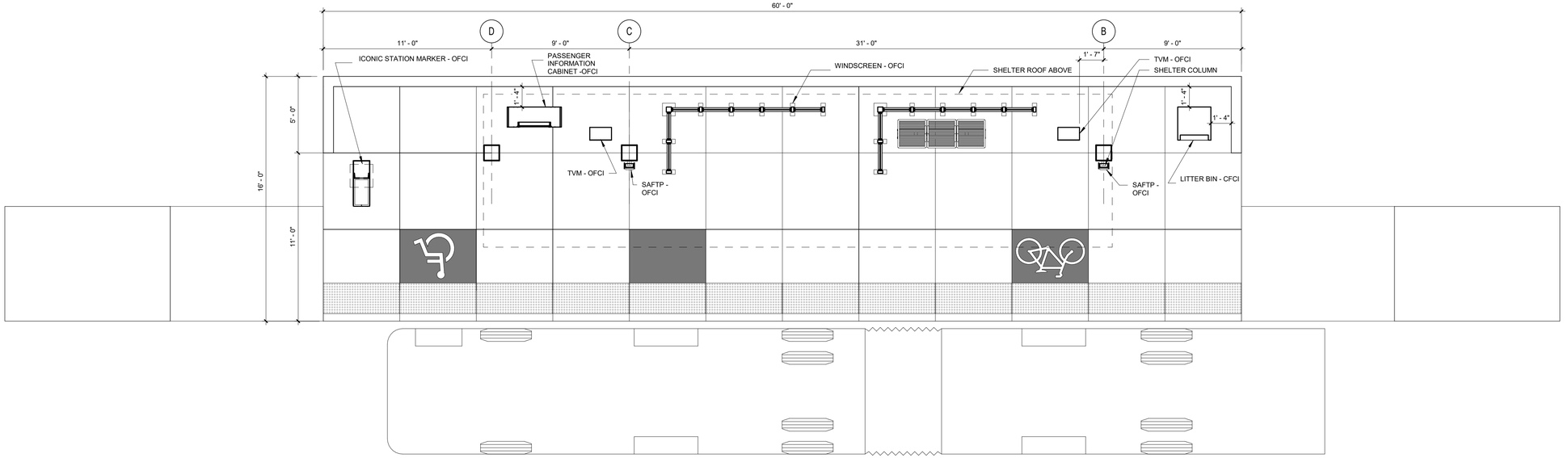

1 PLATFORM PLAN
1/4" = 1'-0"

NO.	REVISION COMMENTS	BY	REVIEW	DATE

DESIGNER: SC & NT
DRAWN BY: SC & NT
CHECKED BY: KGT

P.VOT ARCHITECTURE

13052 REGISTERED ARCHITECT
KARI GREENE TURNER
STATE OF WASHINGTON

communitytransit Swift
ORANGE LINE - 100% SUBMITTAL
ORANGE LINE PLATFORM ARCHITECTURAL PLANS
TYPICAL SHELTER PLAN AND ELEVATION

TITLE

Otak

11241 Willows Road NE, Suite 200
Redmond, WA 98052
425.822.4446
www.otak.com

32880.H
PROJECT NUMBER

A1.101
DRAWING NO.

SHEET 430 OF 622

© 2021 OTAK, INC.

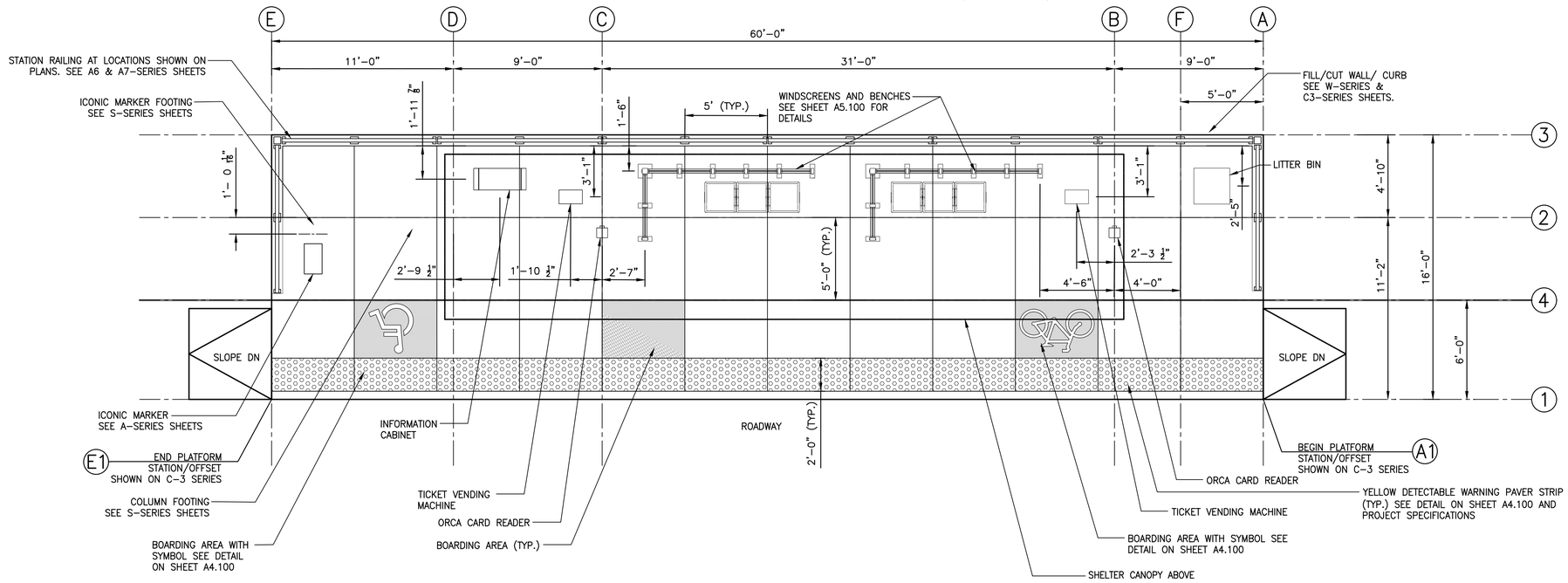

TYPICAL PLATFORM AND GRAPHICS PLAN

SCALE: 1/4" = 1'–0"

NOTES

1. RAILING TO BE OWNER FURNISHED, AND CONTRACTOR INSTALLED. SEE PROJECT SPECIFICATIONS.

SYMBOL LEGEND

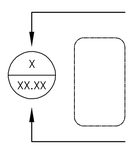

DETAIL ENLARGEMENT



STRUCTURAL GRID SEE A1-SERIES

NO.	REVISION COMMENTS	BY	REVIEW	DATE

DESIGNER

DRAWN BY

CHECKED BY



9/30/21

communitytransit

Swift ORANGE LINE – 100% SUBMITTAL

ORANGE LINE PLATFORM ARCHITECTURAL PLANS

TYPICAL PLATFORM & GRAPHICS PLAN

TITLE

Otak

11241 Willows Road NE, Suite 200
Redmond, WA 98052
425.822.4446
www.otak.com

32880.H
PROJECT NUMBER

A1.102
DRAWING NO.

SHEET 431 OF 622

© 2021 OTAK, INC.

CALL BEFORE YOU DIG 1–800–424–5555

Plotted: Oct 01, 2021 – 9:48am K:\Project\32800\32880H\CADD\ACAD\Dwg\A1.100-A1.300.dwg Layout Name: A1.102

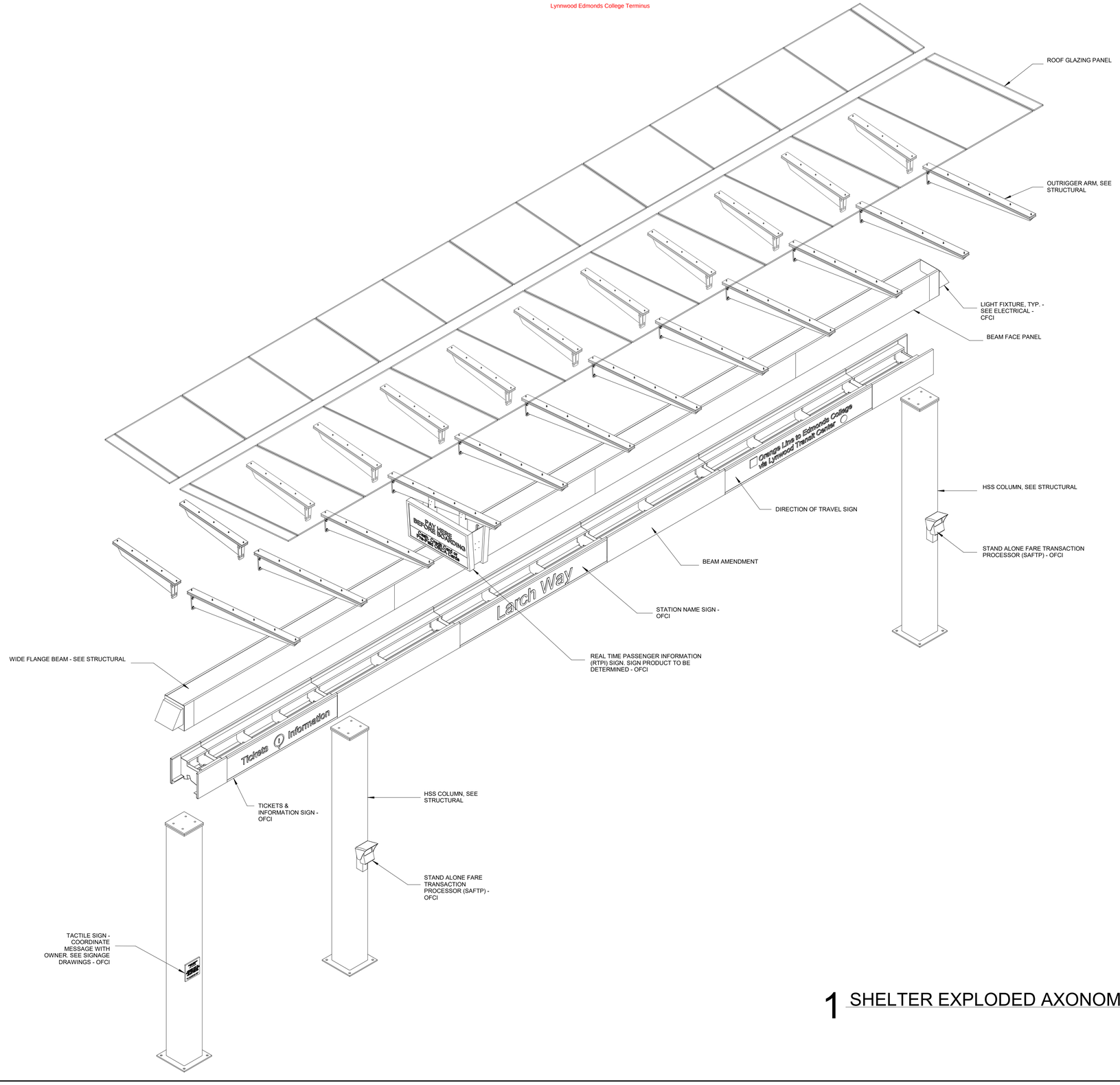

1 SHELTER EXPLODED AXONOMETRIC

DESIGNER	DRAWN BY	CHECKED BY
SC & NT	SC & NT	KGT

NO.	REVISION COMMENTS	BY	DATE	REVIEW

PIVOT ARCHITECTURE

13052 REGISTERED ARCHITECT
KARI GREENE TURNER
STATE OF WASHINGTON

community transit
Swift

ORANGE LINE - 100% SUBMITTAL
ORANGE LINE PLATFORM ARCHITECTURAL PLANS
SHELTER EXPLODED AXON

TITLE

Otak
11241 Willows Road NE, Suite 200
Redmond, WA 98052
425.822.4446
www.otak.com

32880.H
PROJECT NUMBER

A1.400
DRAWING NO.

SHEET 437 OF 622

© 2021 OTAK, INC.

PDR-009731-2021

Lynnwood Edmonds College Terminus

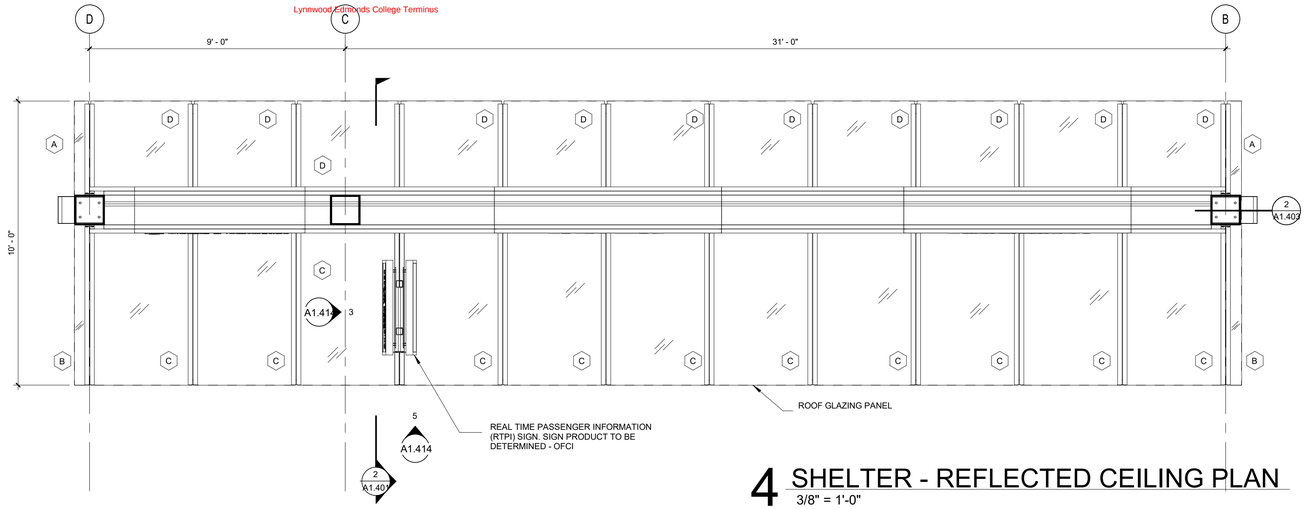

4 SHELTER - REFLECTED CEILING PLAN
3/8" = 1'-0"

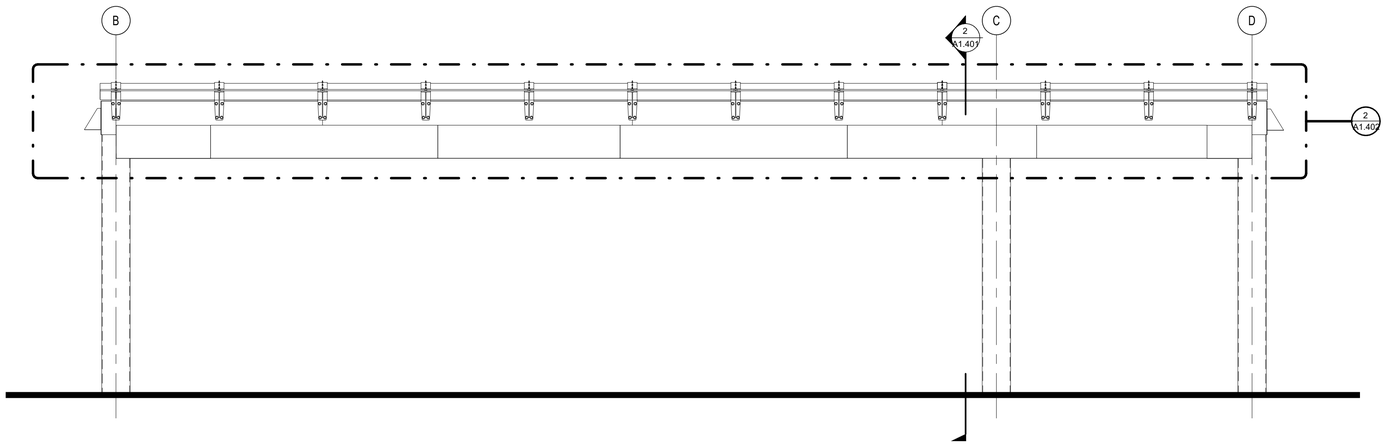

3 SHELTER - BACK ELEVATION
3/8" = 1'-0"

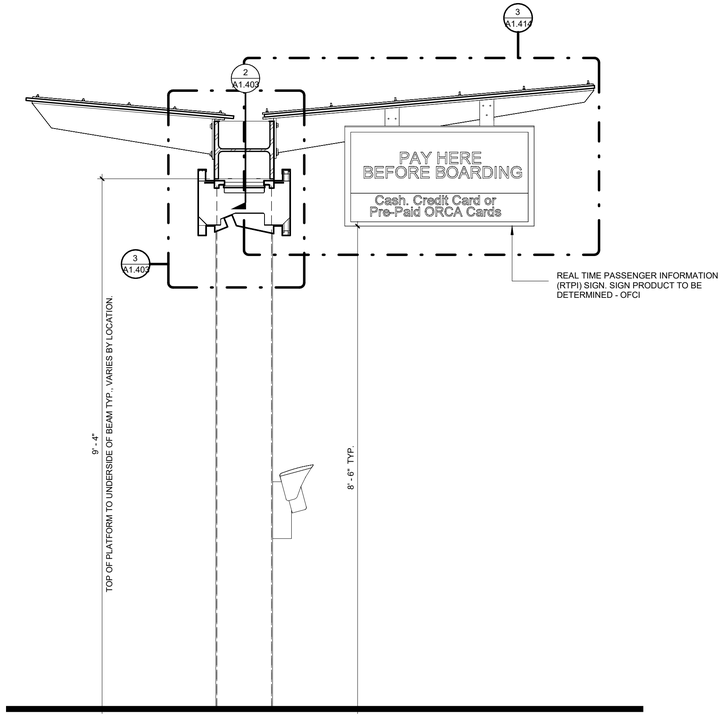

2 SHELTER - TRANSVERSE SECTION
3/4" = 1'-0"

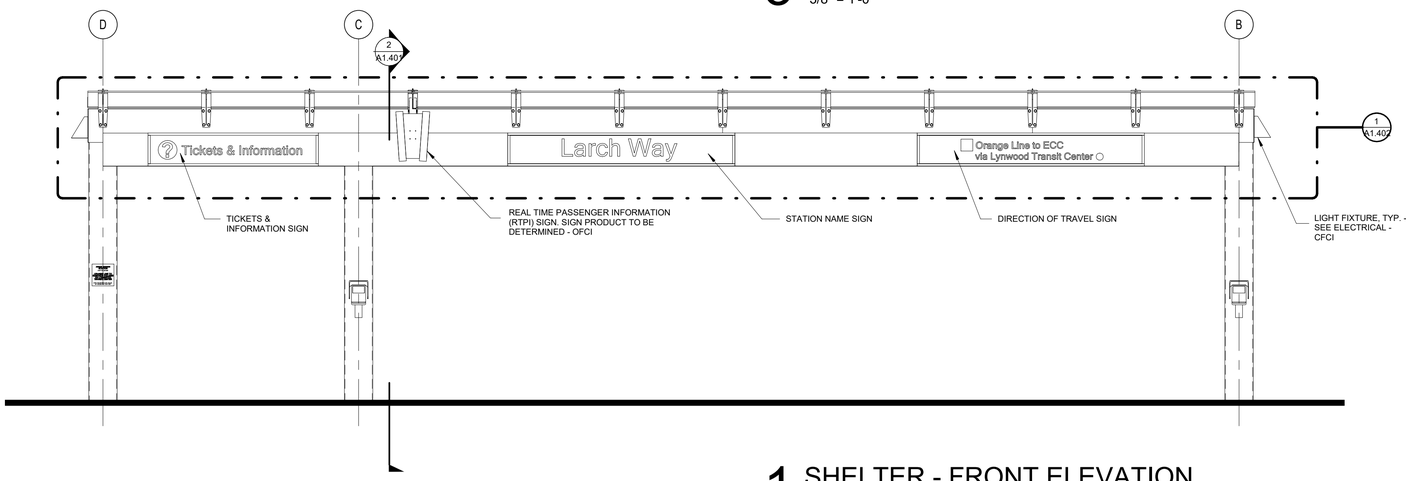

1 SHELTER - FRONT ELEVATION
3/8" = 1'-0"

NO.	REVISION COMMENTS	BY	REVIEW	DATE
				3/22/2022

Submittal,

DESIGNER SC & NT
DRAWN BY SC & NT
CHECKED BY KGT

PIVOT ARCHITECTURE

13052 REGISTERED ARCHITECT
KARI GREENE TURNER
STATE OF WASHINGTON

communitytransit
Swift ORANGE LINE - 100% SUBMITTAL
ORANGE LINE PLATFORM ARCHITECTURAL PLANS
SHELTER GA - ELEVATION AND RCP

TITLE

Otak
11241 Willows Road NE, Suite 200
Redmond, WA 98052
425.822.4446
www.otak.com

32880.H
PROJECT NUMBER

A1.401
DRAWING NO.

SHEET 438 OF 622

© 2021 OTAK, INC.

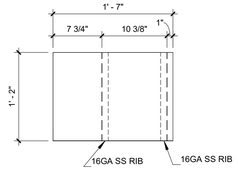

8 AMENDMENT SEGMENT TYPE 6
1" = 1'-0"

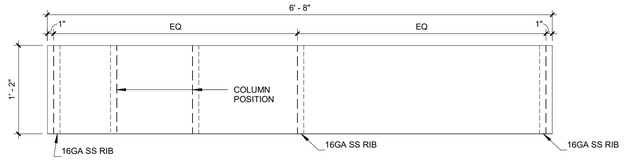

6 AMENDMENT SEGMENT TYPE 4
1" = 1'-0"

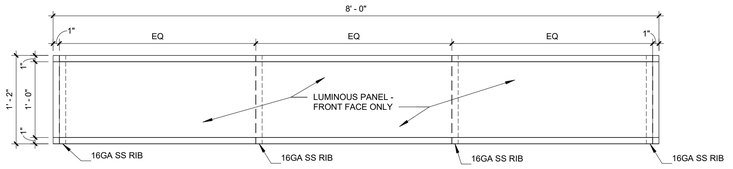

4 AMENDMENT SEGMENT TYPE 2
1" = 1'-0"

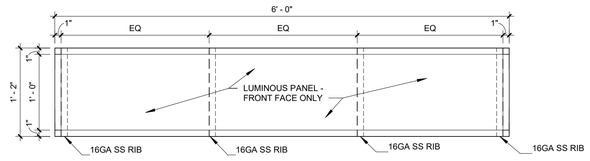

7 AMENDMENT SEGMENT TYPE 5
1" = 1'-0"

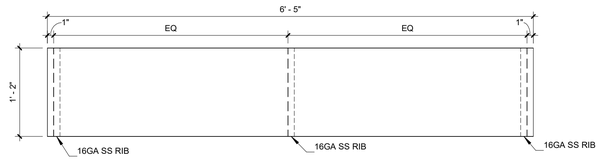

5 AMENDMENT SEGMENT TYPE 3
1" = 1'-0"

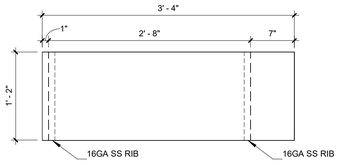

3 AMENDMENT SEGMENT TYPE 1
1" = 1'-0"

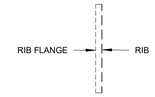

NOTE: IN ORDER TO ENSURE ACCESS TO FASTENERS, RIB FLANGES VARY IN ORIENTATION. NOTE LINE TYPES IN ADJACENT SEGMENT ELEVATIONS THAT DESIGNATE ORIENTATION IN EACH INSTANCE.

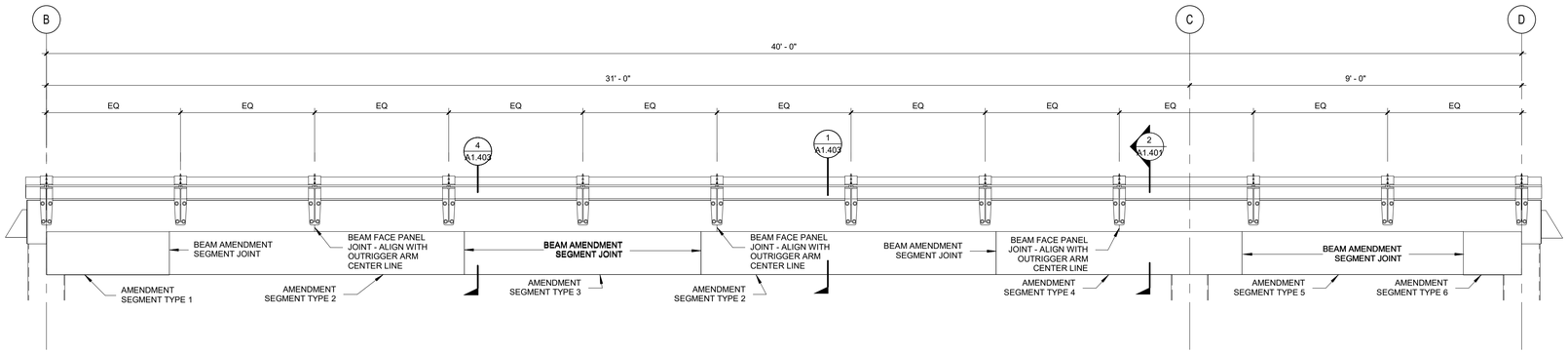

2 SHELTER - ROOF BACK ELEVATION
1/2" = 1'-0"

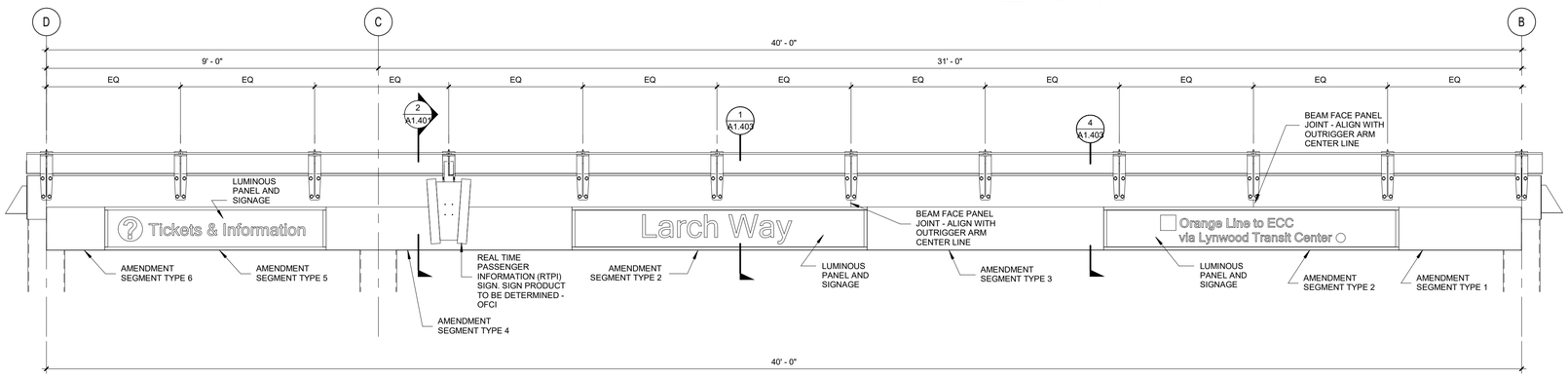

1 SHELTER - ROOF FRONT ELEVATION
1/2" = 1'-0"

NOTE: SEE WAYFINDING DRAWINGS FOR SIGNAGE GRAPHICS INFORMATION

DESIGNER	DRAWN BY	CHECKED BY
SC & NT	SC & NT	KGT

NO.	REVISION COMMENTS	BY	REVIEW	DATE
1	100% Submittal, Final			3/22/2022

PIVOT ARCHITECTURE

13052 REGISTERED ARCHITECT
KARI GREENE TURNER
STATE OF WASHINGTON

community transit
Swift
ORANGE LINE - 100% SUBMITTAL
ORANGE LINE PLATFORM ARCHITECTURAL PLANS
SHELTER GA - ENLARGED ELEVATIONS

TITLE

Otak
11241 Willows Road NE, Suite 200
Redmond, WA 98052
425.822.4446
www.otak.com

32880.H
PROJECT NUMBER

A1.402
DRAWING NO.

SHEET 439 OF 622

© 2021 OTAK, INC.

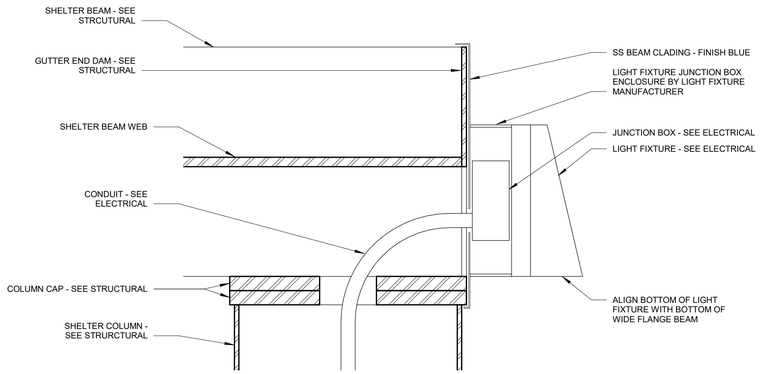

2 BEAM END LIGHT FIXTURE MOUNTING
3" = 1'-0"

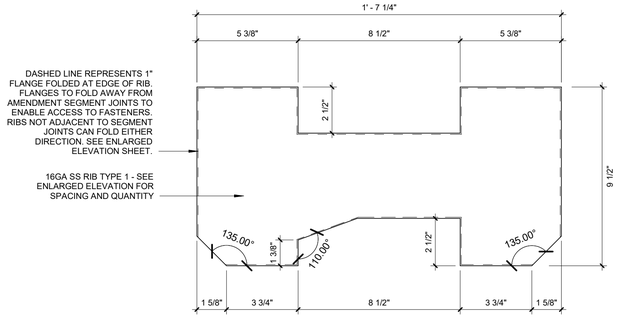

5 BEAM AMENDMENT RIB TYPE 1
3" = 1'-0"

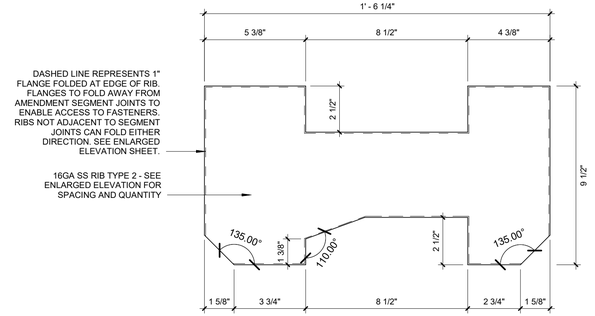

4 BEAM AMENDMENT RIB TYPE 2
3" = 1'-0"

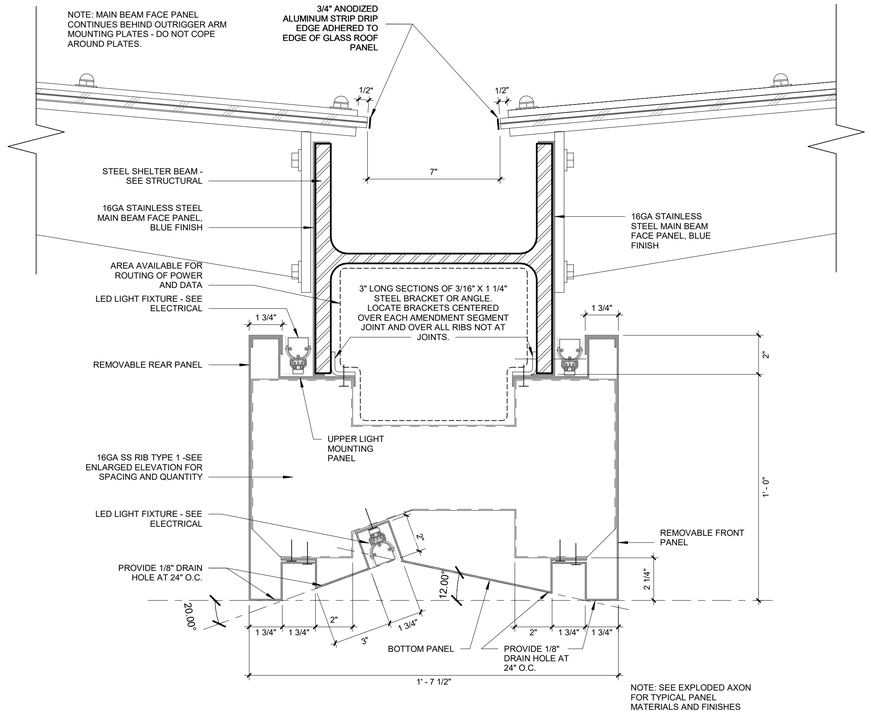

3 BEAM AMENDMENT TYPICAL SECTION
3" = 1'-0"

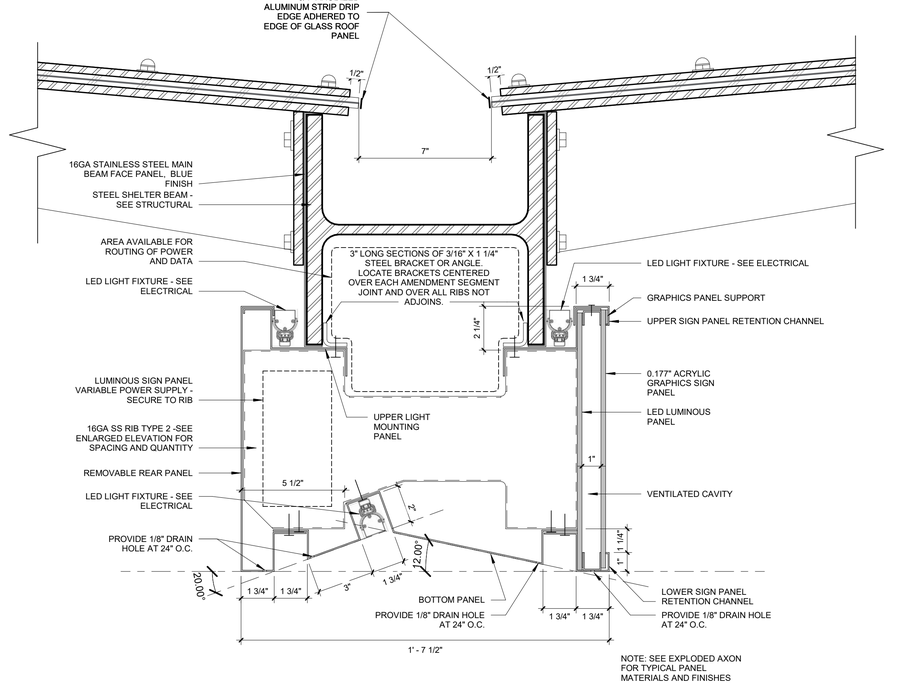

1 BEAM AMENDMENT @ STATION SIGN
3" = 1'-0"

DESIGNER	DRAWN BY	CHECKED BY
SC & NT	SC & NT	KGT

NO.	REVISION COMMENTS	BY	REVIEW	DATE

PIVOT ARCHITECTURE

13052 REGISTERED ARCHITECT
KARI GREENE TURNER
STATE OF WASHINGTON

communitytransit
Swift ORANGE LINE - 100% SUBMITTAL
ORANGE LINE PLATFORM ARCHITECTURAL PLANS
SHELTER BEAM AMENDMENT DETAILS

TITLE

Otak

11241 Willows Road NE, Suite 200
Redmond, WA 98052
425.822.4446
www.otak.com

32880.H
PROJECT NUMBER

A1.403
DRAWING NO.

SHEET 440 OF 622

© 2021 OTAK, INC.

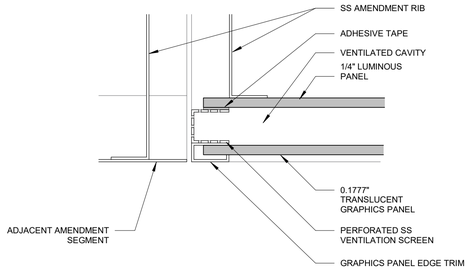

3 JAMB AT AMENDMENT SEGMENTS WITH LUMINOUS PANELS

6" = 1'-0"

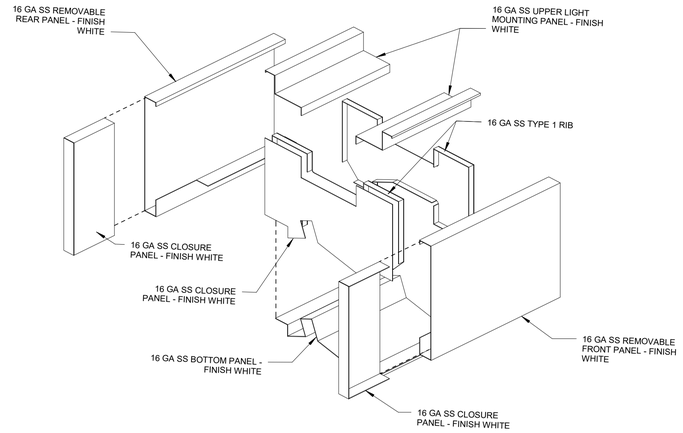

2 BEAM AMEMNDMENT SEGMENT TYPE 5 EXPLODED AXON

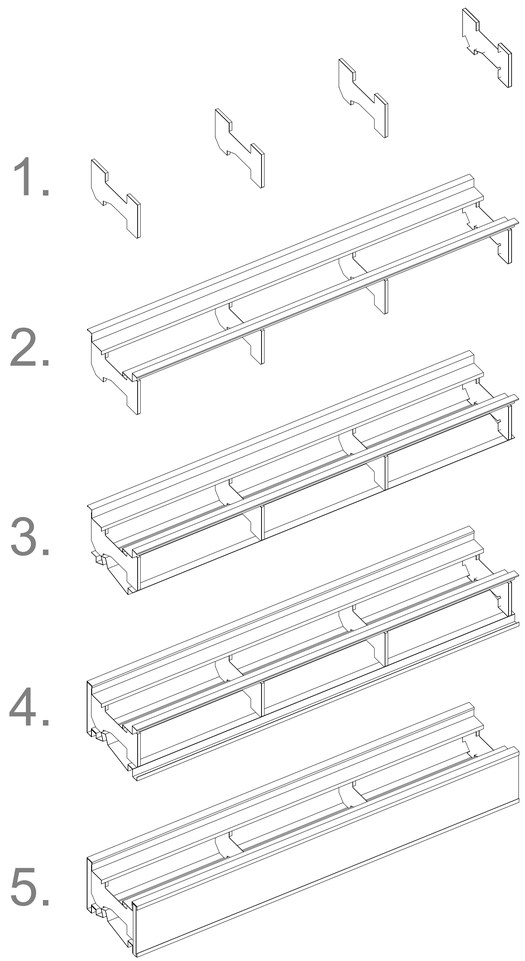

RECOMMENDED TYPICAL SEGMENT ASSEMBLY SEQUENCE:

1. ESTABLISH RIB SPACING AND ORIENTATION

2. ATTACH UPPER LIGHT MOUNTING PANELS. FASTEN ASSEMBLY TO BEAM (BEAM NOT SHOWN).

3. ATTACH BOTTOM PANEL

4. ATTACH REMOVABLE BACK PANEL AND LOWER SIGN PANEL RETENTION CHANNEL

5. INSTALL LED LUMINOUS PANEL, PERFORATED VENTILATION SCREENS, AND GRAPHICS SIGN PANEL. SECURE WITH UPPER SIGN PANEL RETENTION CHANNEL.

SEQUENCE FOR SEGMENT WITH SIGN PANEL SHOWN. SEQUENCE AT SEGMENTS WITHOUT SIGN PANELS SIMILAR.

4 AMENDMENT ASSEMBLY SEQUENCE

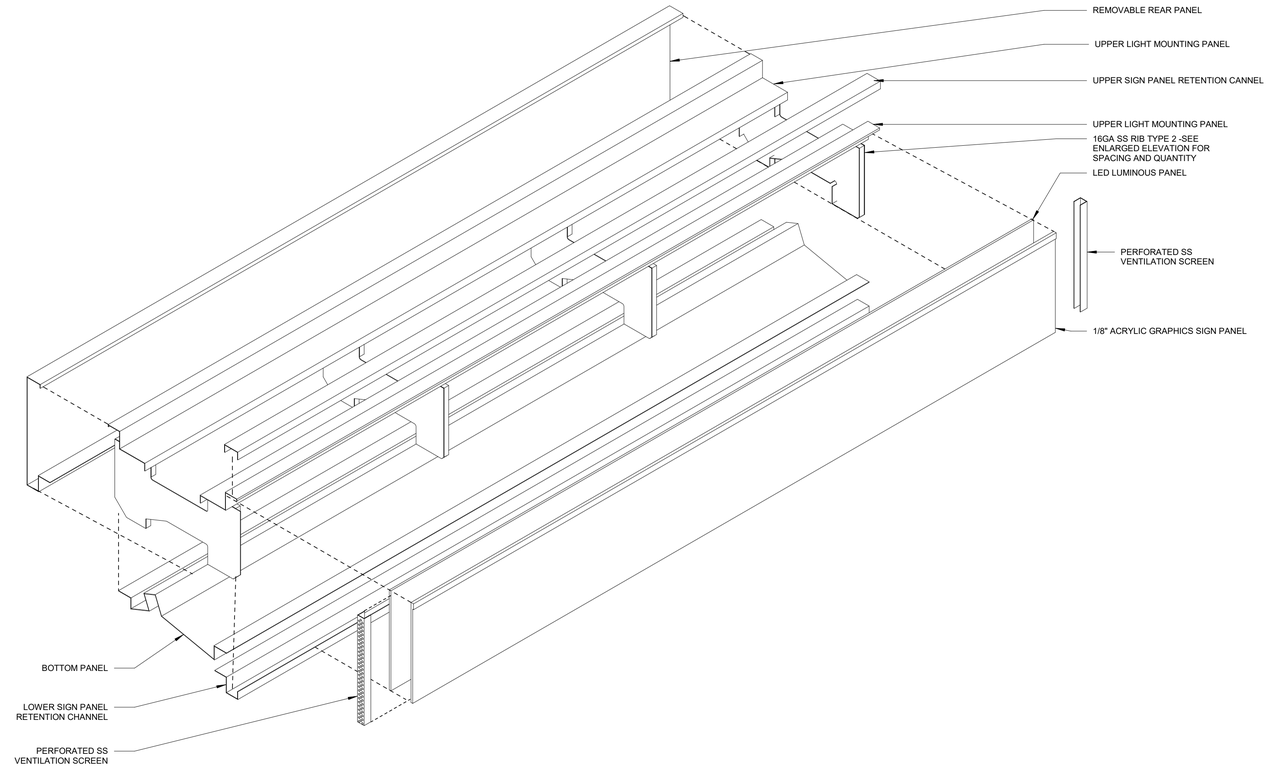

1 EXPLODED AXON - BEAM AMENDMENT TYPE 2

DESIGNER	DRAWN BY	CHECKED BY
SC & NT	SC & NT	KGT

NO.	REVISION COMMENTS	BY	REVIEW	DATE
1	Final Submittal,			3/22/2022

PIVOT ARCHITECTURE

13052 REGISTERED ARCHITECT
KARI GREENE TURNER
STATE OF WASHINGTON

communitytransit
Swift
ORANGE LINE - 100% SUBMITTAL
ORANGE LINE PLATFORM ARCHITECTURAL PLANS
BEAM AMENDMENT AXONS

TITLE

Otak
11241 Willows Road NE, Suite 200
Redmond, WA 98052
425.822.4446
www.otak.com

32880.H
PROJECT NUMBER

A1.404
DRAWING NO.

SHEET 441 OF 622

© 2021 OTAK, INC.

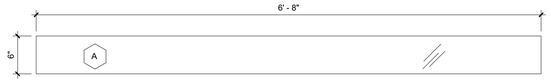

ROOF GLAZING PANEL TYPE A



ROOF GLAZING PANEL TYPE B



ROOF GLAZING PANEL TYPE C

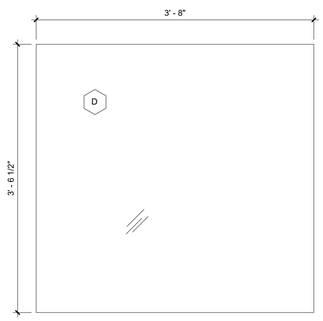

ROOF GLAZING PANEL TYPE D

1 GLASS ROOF PANEL TYPES
1" = 1'-0"

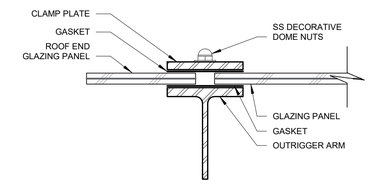

2 CANOPY CLAMP DETAIL @ END
3" = 1'-0"

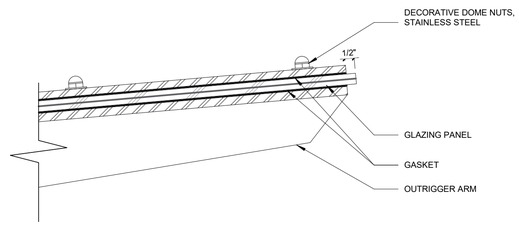

3 DETAIL @ RAKE
3" = 1'-0"

DESIGNER	DRAWN BY	CHECKED BY
SC & NT	SC & NT	KGT

NO.	REVISION COMMENTS	BY	REVIEW	DATE
1	100% Submittal, Final			3/22/2022

PIVOT ARCHITECTURE

13052 REGISTERED ARCHITECT
KARI GREENE TURNER
STATE OF WASHINGTON

community transit Swift

ORANGE LINE - 100% SUBMITTAL
ORANGE LINE PLATFORM ARCHITECTURAL PLANS
ROOF GLAZING

TITLE

Otak
11241 Willows Road NE, Suite 200
Redmond, WA 98052
425.822.4446
www.otak.com

32880.H
PROJECT NUMBER

A1.405
DRAWING NO.

SHEET 442 OF 622

© 2021 OTAK, INC.

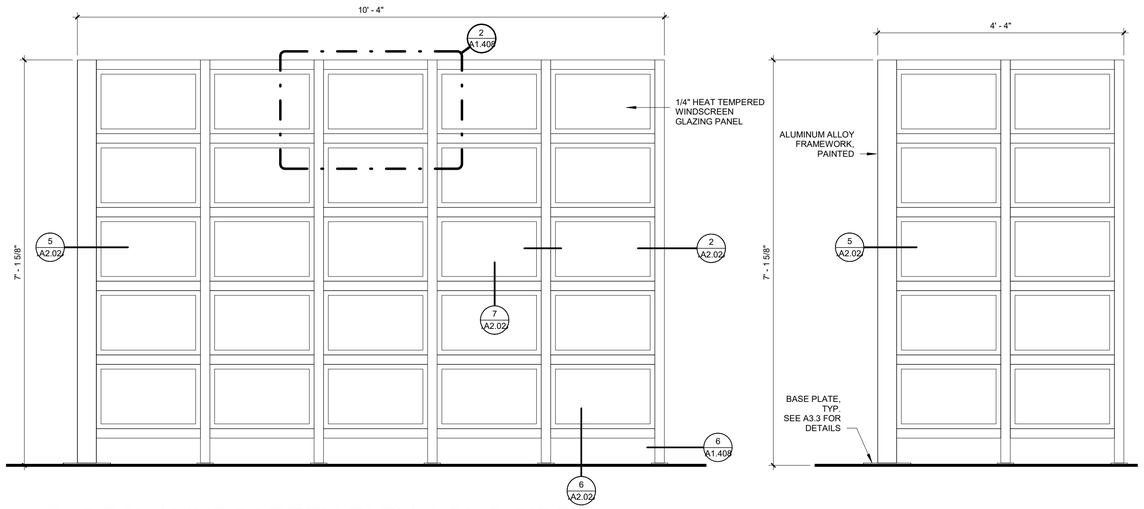

3 5 BAY WINDSCREEN ELEV. LONG SIDE
3/4" = 1'-0"

6 WINDSCREEN ELEV. SHORT SIDE
3/4" = 1'-0"

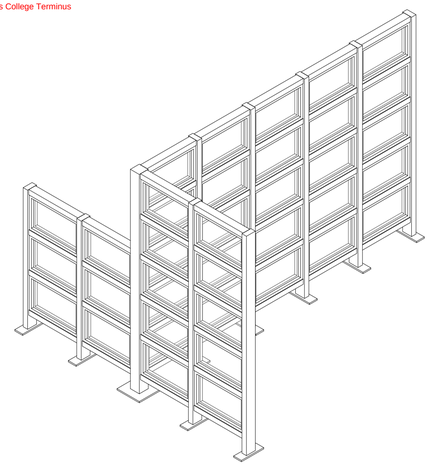

9 LTC WEST WINDSCREEN - PLATFORM C5

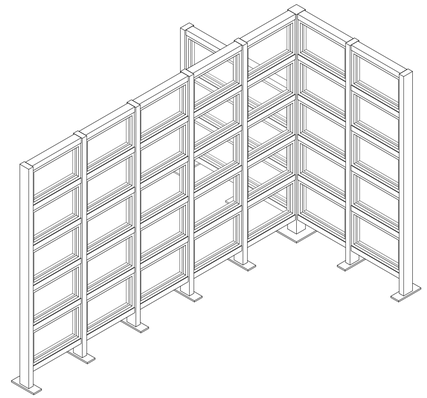

8 LTC EAST WINDSCREEN - PLATFORM C5

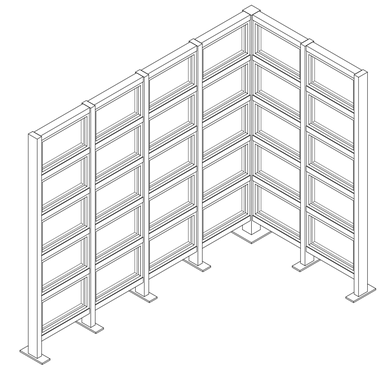

5 AXON - 4 BAY WINDSCREEN, REVERSE

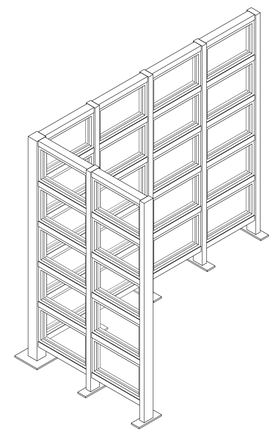

4 AXON - 4 BAY WINDSCREEN, STD.

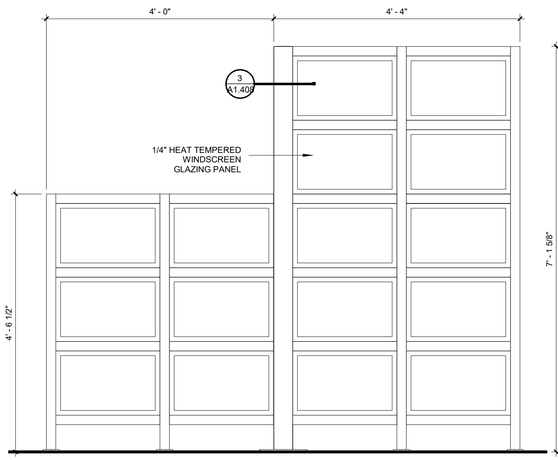

10 LYNNWWOD TC SHORT ELEVATION
3/4" = 1'-0"

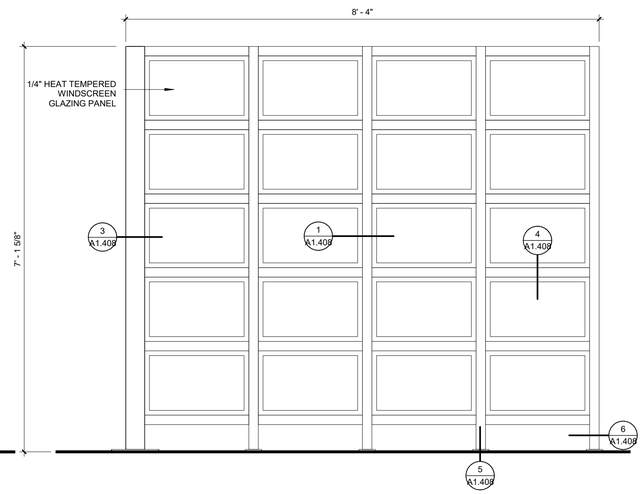

7 4 BAY WINDSCREEN ELEV. LONG SIDE
3/4" = 1'-0"

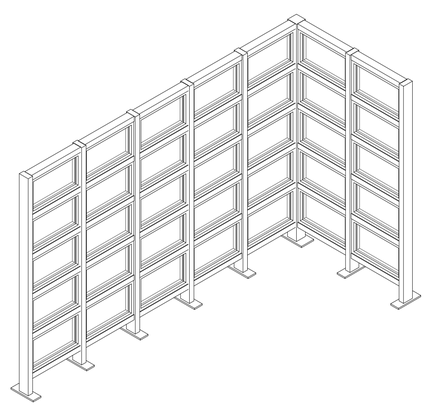

2 AXON - 5 BAY WINDSCREEN, REVERSE

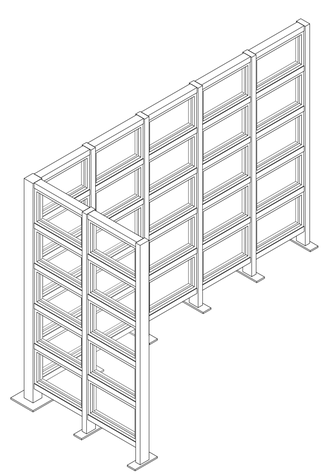

1 AXON - 5 BAY WINDSCREEN, STD.

NO.	REVISION COMMENTS	BY	REVIEW	DATE

DESIGNER: SC & NT
DRAWN BY: SC & NT
CHECKED BY: KGT

PIVOT ARCHITECTURE

13052 REGISTERED ARCHITECT
KARI GREENE TURNER
STATE OF WASHINGTON

communitytransit
Swift ORANGE LINE - 100% SUBMITTAL
ORANGE LINE PLATFORM ARCHITECTURAL PLANS
WINDSCREENS

TITLE

Otak
11241 Willows Road NE, Suite 200
Redmond, WA 98052
425.822.4446
www.otak.com

32880.H
PROJECT NUMBER

A1.406
DRAWING NO.

SHEET 443 OF 622

© 2021 OTAK, INC.

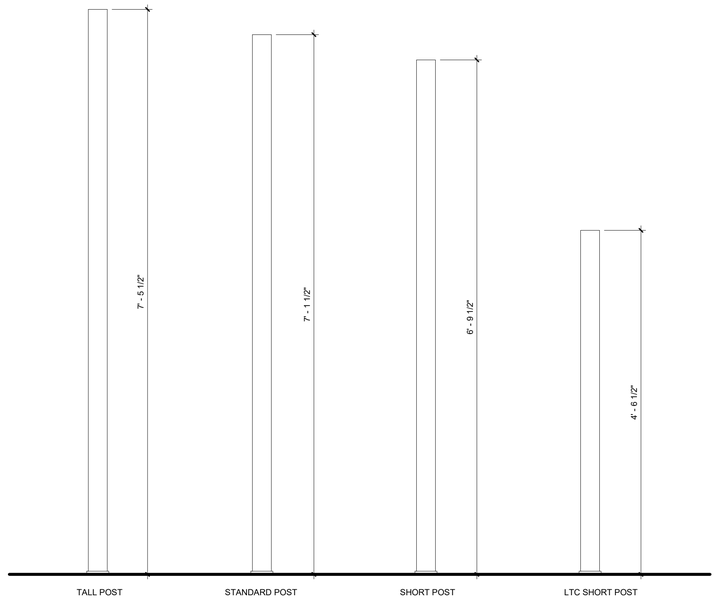

2 WINDSCREEN POST TYPES
1" = 1'-0"

WINDSCREEN POST LENGTH SCHEDULE								
Station	Station ID	Slope (%)	Slope (Degrees)	Windscreen configuration	Corner Post Quantity/Type	Quantities		
						Short	Standard	Tall
164th St SE at Mill Creek	3236	3.58	2.05	5	(2) Standard	0	10	2
164th St at Swamp Creek	3240	-5.77	-3.3	2	(2) Tall	4	6	4
164th St at Swamp Creek	3232	6.67	3.82	1	(2) Tall	4	6	4
164th St at Larch Way	3238	-8.32	-4.76	1	(2) Short	6	4	4
164th St at Larch Way	3234	8.62	4.93	2	(2) Short	6	4	4

Notes:
1. Negative slope values mean that the arrival side of the platform is LOWER than the departure side
2. See Windscreen Configuration sheet for windscreen configurations.
2. Three post lengths are provided to avoid shim stacks taller than approximately 3".
3. All posts not listed above to be of standard length

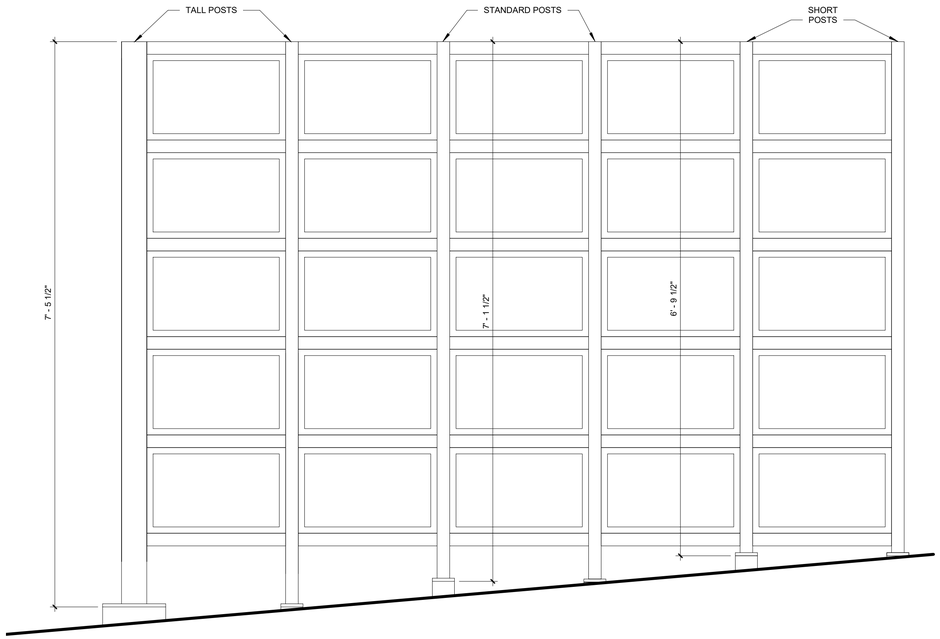

1 WINDSCREEN @ 8.62% SLOPE
1" = 1'-0"

NO.	REVISION COMMENTS	BY	REVIEW	DATE
				100% Submittal, Final 3/22/2022

DESIGNER SC & NT
DRAWN BY SC & NT
CHECKED BY KGT

PIVOT ARCHITECTURE

13052 REGISTERED ARCHITECT
KARI GREENE TURNER
STATE OF WASHINGTON

communitytransit
Swift ORANGE LINE - 100% SUBMITTAL
ORANGE LINE PLATFORM ARCHITECTURAL PLANS
WINDSCREEN AT SLOPE

TITLE

Otak
11241 Willows Road NE, Suite 200
Redmond, WA 98052
425.822.4446
www.otak.com

32880.H
PROJECT NUMBER

A1.407
DRAWING NO.

SHEET 444 OF 622

© 2021 OTAK, INC.

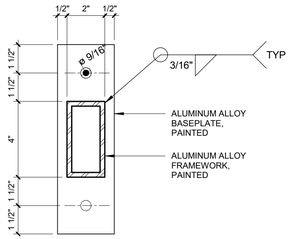

6 WINDSCREEN - BASE PLATE @ NEW PLATFORMS
3" = 1'-0"

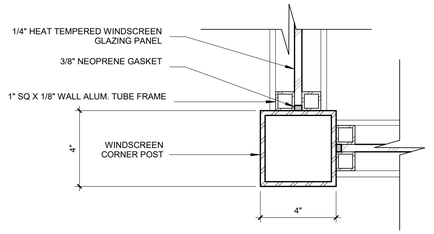

3 WINDSCREEN - CORNER POST
3" = 1'-0"

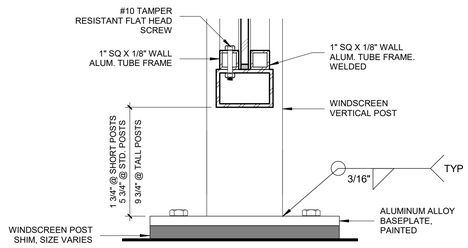

5 WINDSCREEN - BASE PLATE
3" = 1'-0"

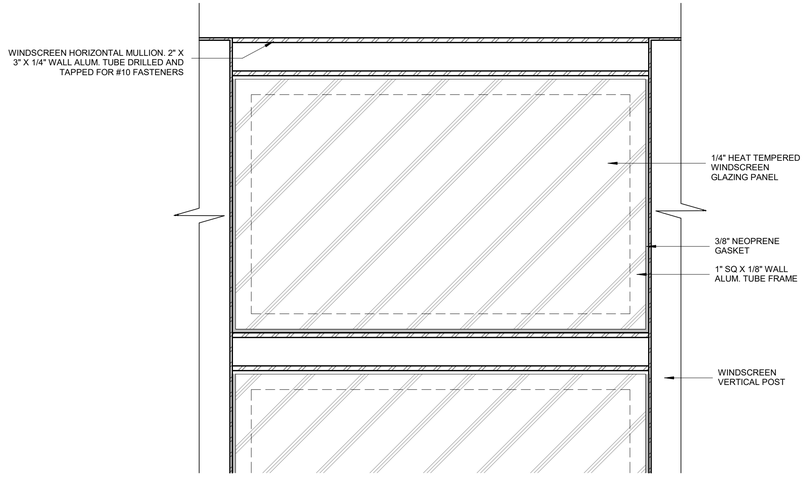

2 WINDSCREEN - HORIZONTAL MULLION DETAIL
3" = 1'-0"

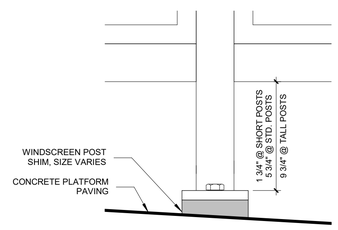

7 WINDSCREEN - BASE PLATE WITH SHIMS
3" = 1'-0"

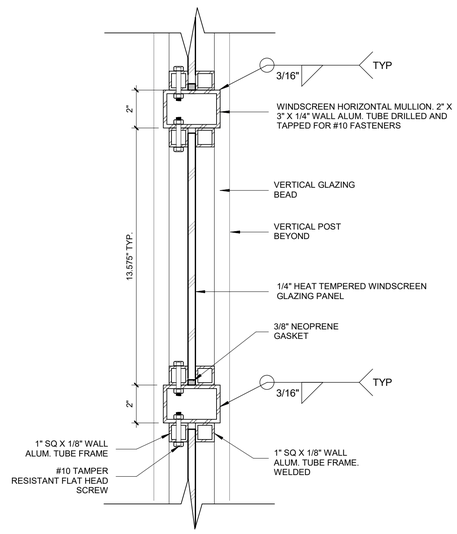

4 WINDSCREEN - DETAIL SECTION
3" = 1'-0"

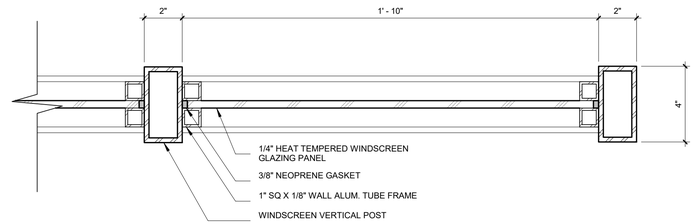

1 WINDSCREEN - MIDDLE POST AND END POST
3" = 1'-0"

NO.	REVISION COMMENTS	BY	REVIEW	DATE
				3/22/2022

DESIGNER SC & NT
DRAWN BY SC & NT
CHECKED BY KGT

1 Submittal, 3/22/2022

PIVOT ARCHITECTURE

13052 REGISTERED ARCHITECT
KARI GREENE TURNER
STATE OF WASHINGTON

communitytransit
Swift ORANGE LINE - 100% SUBMITTAL
ORANGE LINE PLATFORM ARCHITECTURAL PLANS
WINDSCREEN DETAILS

TITLE

Otak

11241 Willows Road NE, Suite 200
Redmond, WA 98052
425.822.4446
www.otak.com

32880.H
PROJECT NUMBER

A1.408
DRAWING NO.

SHEET 445 OF 622

© 2021 OTAK, INC.

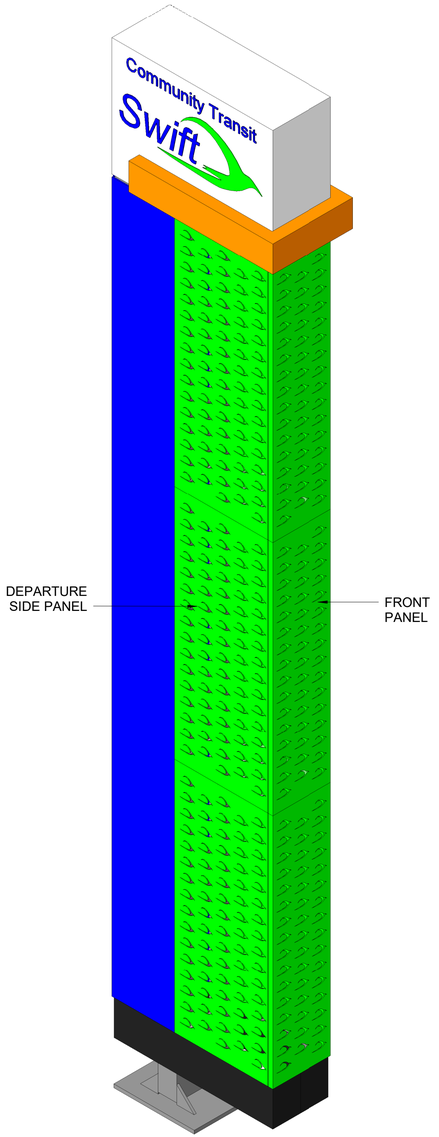

5 AXON - ICONIC MARKER

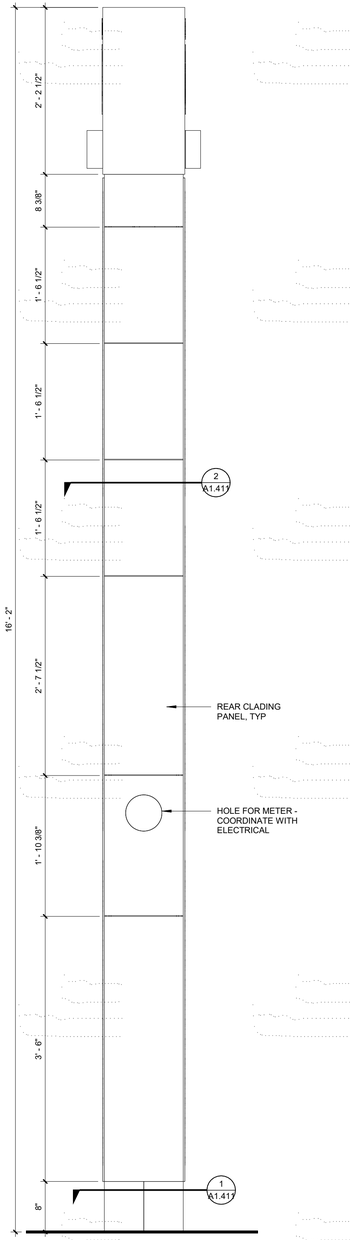

4 BACK ELEVATION
1" = 1'-0"

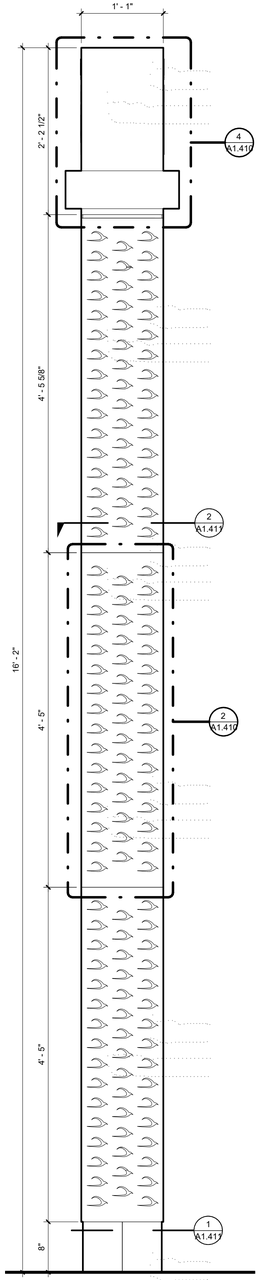

3 FRONT ELEVATION
1" = 1'-0"

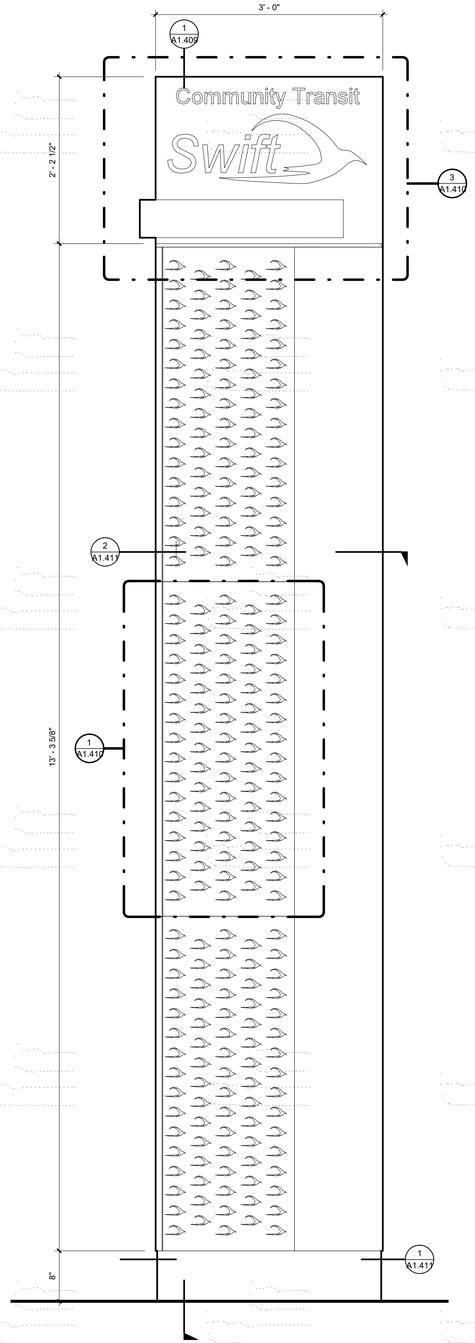

2 ARRIVAL SIDE ELEVATION
1" = 1'-0"

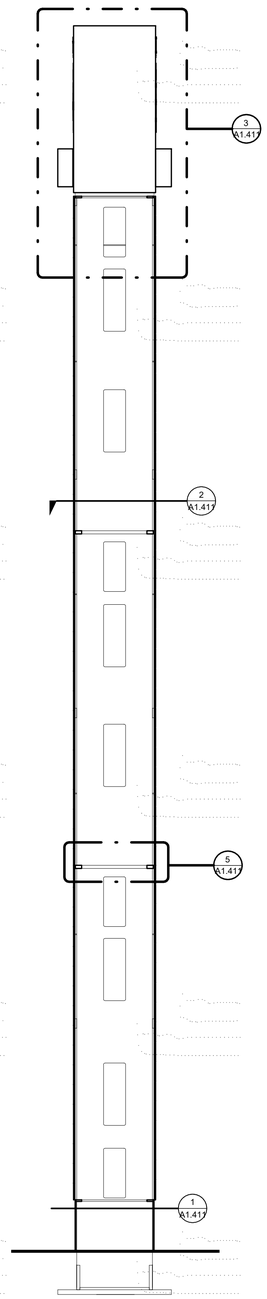

1 SECTION
1" = 1'-0"

DESIGNER	DRAWN BY	CHECKED BY
SC & NT	SC & NT	KGT

NO.	REVISION COMMENTS	BY	REVIEW	DATE
1	Submittal, Final			3/22/2022

PIVOT ARCHITECTURE

13052 REGISTERED ARCHITECT
KARI GREENE TURNER
STATE OF WASHINGTON

community transit
Swift ORANGE LINE - 100% SUBMITTAL
ORANGE LINE PLATFORM ARCHITECTURAL PLANS
ICONIC MARKER ASSEMBLY

TITLE

Otak
11241 Willows Road NE, Suite 200
Redmond, WA 98052
425.822.4446
www.otak.com

32880.H
PROJECT NUMBER

A1.409
DRAWING NO.

SHEET 446 OF 622

© 2021 OTAK, INC.

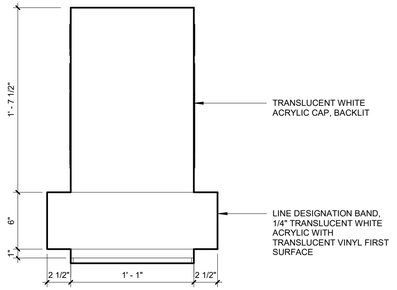

4 ICONIC MARKER - CAP FRONT ELEVATION
1 1/2" = 1'-0"

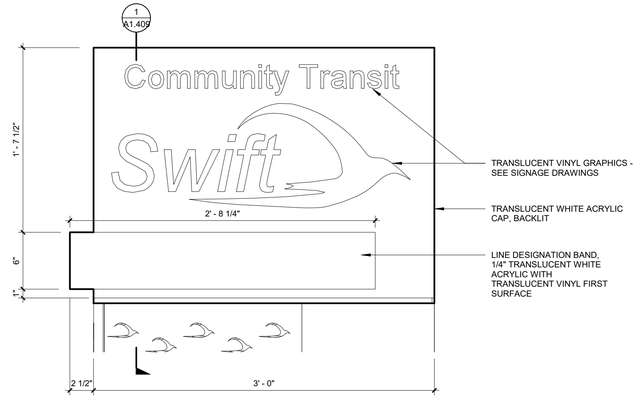

3 ICONIC MARKER - CAP SIDE ELEVATION
1 1/2" = 1'-0"

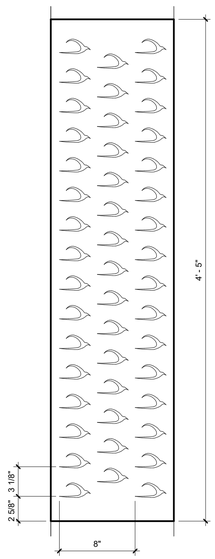

2 ICONIC MARKER - FRONT PANEL
1 1/2" = 1'-0"

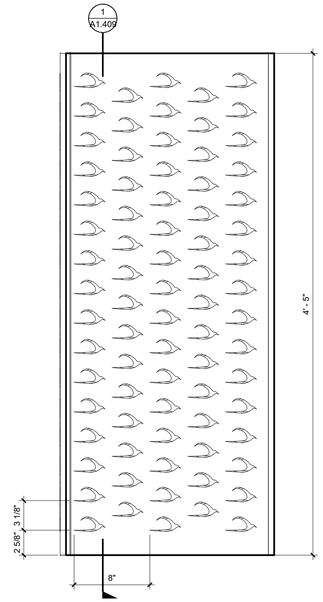

1 ICONIC MARKER - ARRIVAL SIDE PANEL
1 1/2" = 1'-0"

NO.	REVISION COMMENTS	BY	REVIEW	DATE

DESIGNER SC & NT
DRAWN BY SC & NT
CHECKED BY KGT

Submittal, 3/22/2022

P:VOT ARCHITECTURE

13052 REGISTERED ARCHITECT
KARI GREENE TURNER
STATE OF WASHINGTON

communitytransit
Swift ORANGE LINE - 100% SUBMITTAL
ORANGE LINE PLATFORM ARCHITECTURAL PLANS
ICONIC MARKER DETAILS

TITLE

Otak

11241 Willows Road NE, Suite 200
Redmond, WA 98052
425.822.4446
www.otak.com

32880.H
PROJECT NUMBER

A1.410
DRAWING NO.

SHEET 447 OF 622

© 2021 OTAK, INC.

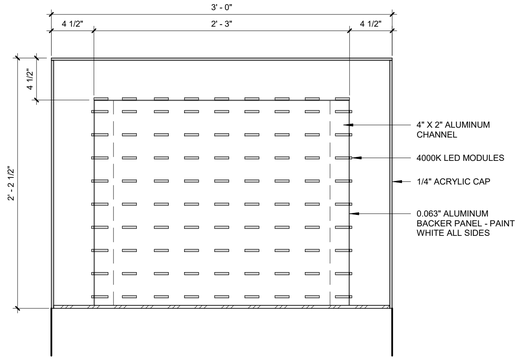

6 ICONIC MARKER CAP SECTION DETAIL
1 1/2" = 1'-0"

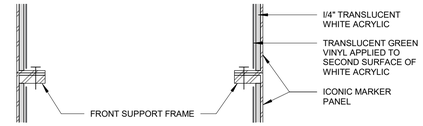

5 SECTION DETAIL - PANEL ATTACHMENT
3" = 1'-0"

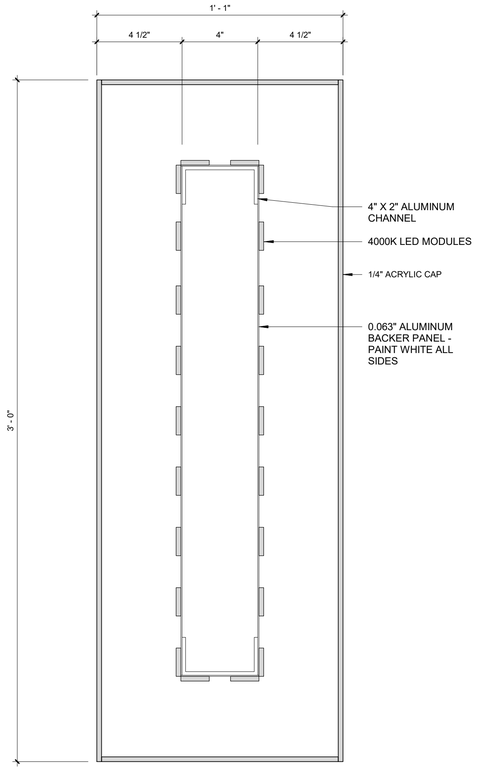

4 ICONIC MARKER CAP PLAN DETAIL
3" = 1'-0"

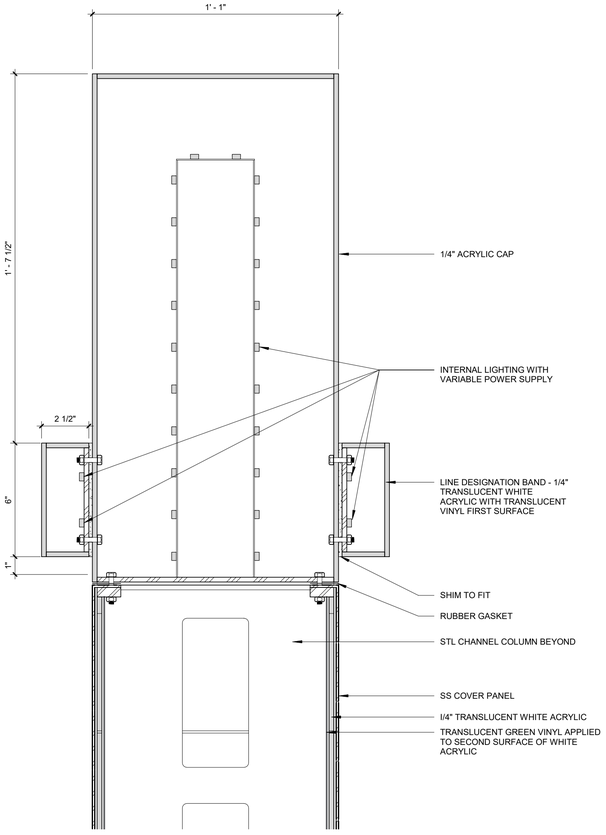

3 ICONIC MARKER CAP SECTION DETAIL
3" = 1'-0"

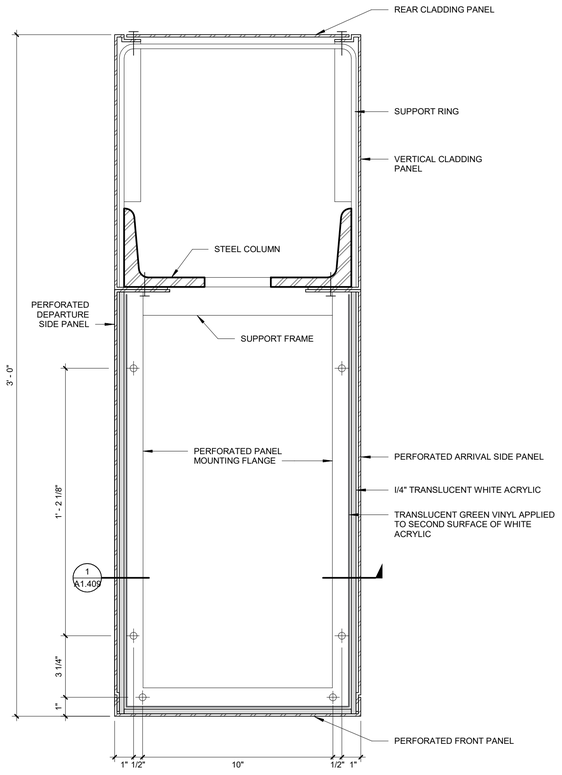

2 PLAN DETAIL - CLADDING ATTACHMENT
3" = 1'-0"

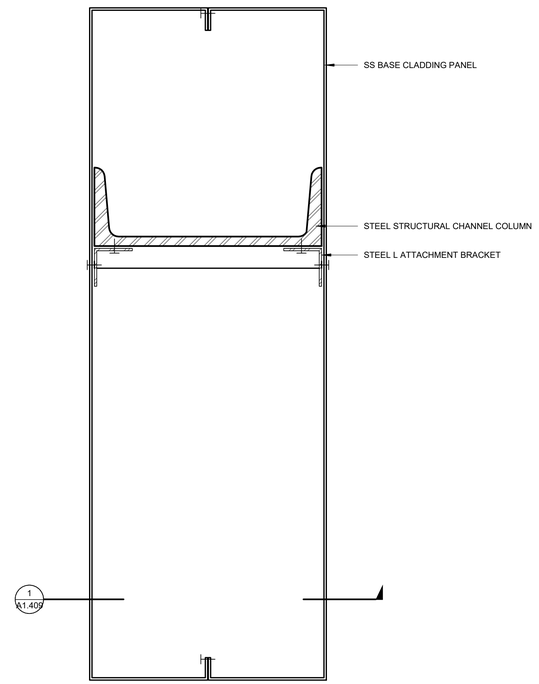

1 PLAN DETAIL - BASE CLADDING
3" = 1'-0"

NO.	REVISION COMMENTS	BY	REVIEW	DATE

DESIGNER SC & NT
DRAWN BY SC & NT
CHECKED BY KGT

PIVOT ARCHITECTURE

13052 REGISTERED ARCHITECT
KARI GREENE TURNER
STATE OF WASHINGTON

communitytransit
Swift ORANGE LINE - 100% SUBMITTAL
ORANGE LINE PLATFORM ARCHITECTURAL PLANS
ICONIC MARKER DETAILS

TITLE

Otak
11241 Willows Road NE, Suite 200
Redmond, WA 98052
425.822.4446
www.otak.com

32880.H
PROJECT NUMBER

A1.411
DRAWING NO.

SHEET 448 OF 622

© 2021 OTAK, INC.

PLAN SHEET NOT USED

CALL BEFORE YOU DIG 1-800-424-5555

DESIGNER	DRAWN BY	CHECKED BY

NO.	REVISION COMMENTS	BY	REVIEW	DATE

communitytransit
Swift ORANGE LINE – 100% SUBMITTAL
ORANGE LINE PLATFORM ARCHITECTURAL PLANS
SHELTER & AMENITIES INSTALLATION DETAILS

TITLE

Otak

11241 Willows Road NE, Suite 200
Redmond, WA 98052
425.822.4446
www.otak.com

32880.H
PROJECT NUMBER

A1.412
DRAWING NO.

SHEET 449 OF 622

© 2021 OTAK, INC.

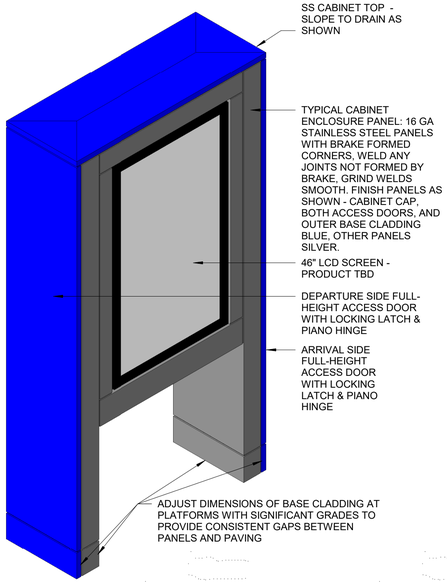

8 AXON - INFO CABINET

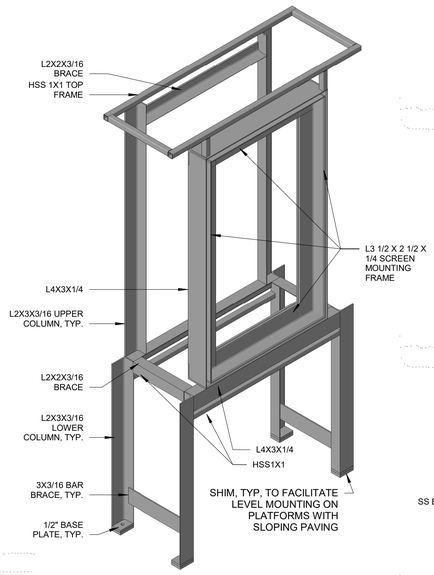

7 AXON - INFO CABINET FRAME

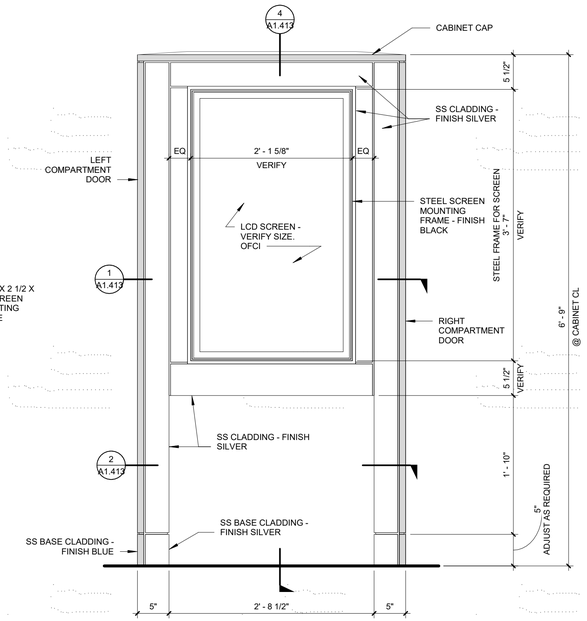

6 INFO CABINET - FRONT ELEVATION

1" = 1'-0"

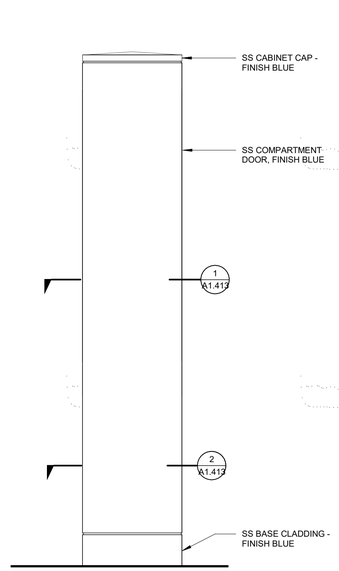

5 INFO CABINET - SIDE ELEV.

1" = 1'-0"

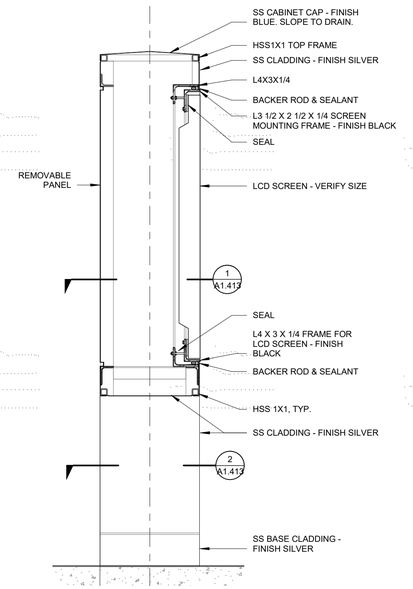

4 INFO CABINET - SECTION

1" = 1'-0"

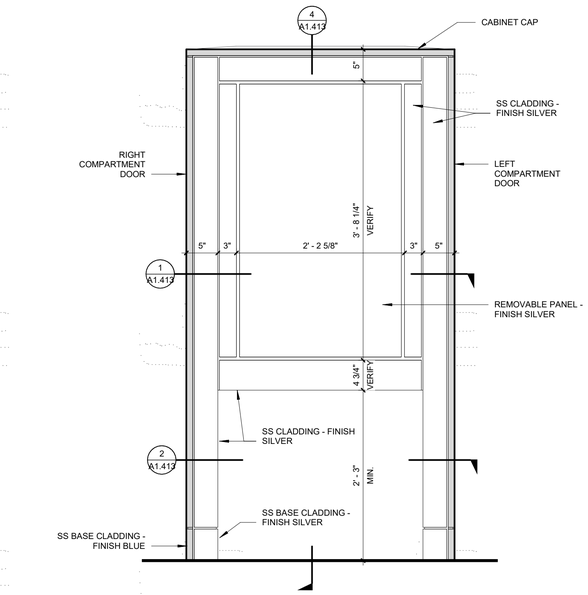

3 INFO CABINET - REAR ELEVATION

1" = 1'-0"

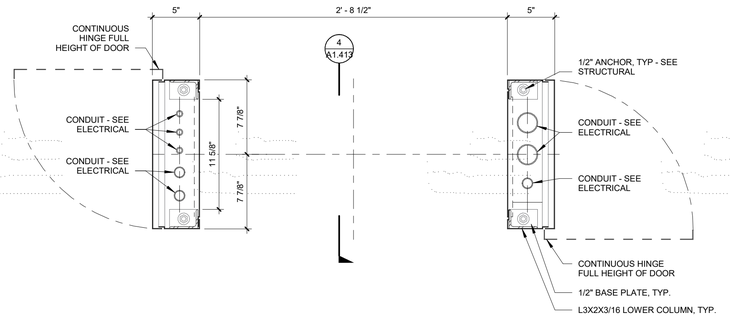

2 INFO CABINET - PLAN, LOW

1 1/2" = 1'-0"

NOTE: DIMENSIONS ON THIS SHEET NOTED AS "VERIFY" ARE SUBJECT TO REVISION BASED ON THE ACTUAL LCD SCREEN PRODUCT SELECTED BY THE OWNER. PRODUCT HAS NOT BEEN SELECTED AT THE TIME OF THE PRINTING OF THESE DRAWINGS. SELECTED PRODUCT MAY DIFFER IN SIZE FROM THE SCREEN SHOWN IN THESE DRAWINGS REQUIRING REVISION TO THE DIMENSIONS NOTED AS "VERIFY" AND POTENTIALLY OTHER REVISIONS AS WELL. THE MOUNTING SYSTEM SHOWN IS INTENDED TO ACCOMMODATE MINOR DEVIATIONS IN CASE SIZES OF 46" DISPLAYS BY VARIOUS MANUFACTURERS, BOTH FOR INITIAL INSTALLATION AND SUBSEQUENT REPLACEMENT. IT IS INTENDED THAT THE SCREEN MOUNTING FRAME CAN BE RECONFIGURED TO SUIT INITIAL INSTALLATION, AND COULD BE MODIFIED OR REPLACED WITH A MODIFIED FRAME TO SUIT INSTALLATION OF SOME DIFFERENT DISPLAY IN THE FUTURE.

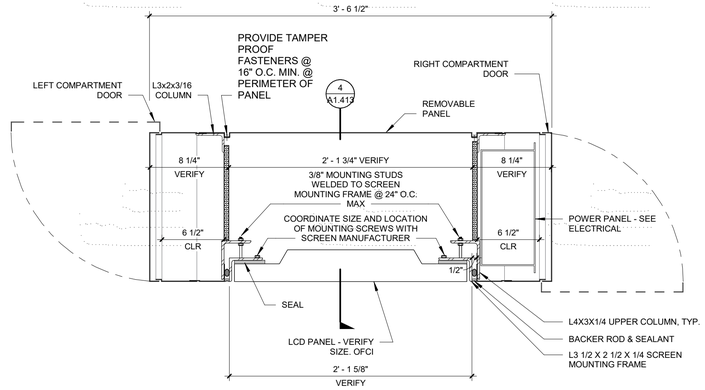

1 INFO CABINET - PLAN

1 1/2" = 1'-0"

NO.	REVISION COMMENTS	BY	REVIEW	DATE

DESIGNER SC & NT
DRAWN BY SC & NT
CHECKED BY KGT

FF Submittal, Rel 3/22/2022

PIVOT ARCHITECTURE

13052 REGISTERED ARCHITECT
KARI GREENE TURNER
STATE OF WASHINGTON

communitytransit
Swift ORANGE LINE - 100% SUBMITTAL
ORANGE LINE PLATFORM ARCHITECTURAL PLANS
INFORMATION CABINET

TITLE

Otak

11241 Willows Road NE, Suite 200
Redmond, WA 98052
425.822.4446
www.otak.com

32880.H
PROJECT NUMBER

A1.413
DRAWING NO.

SHEET 450 OF 622

© 2021 OTAK, INC.

PDR-009731-2021

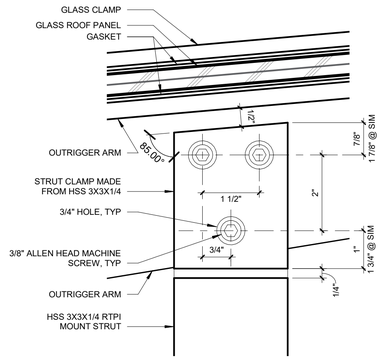

8 ELEVATION - RTPI MOUNT
6" = 1'-0"

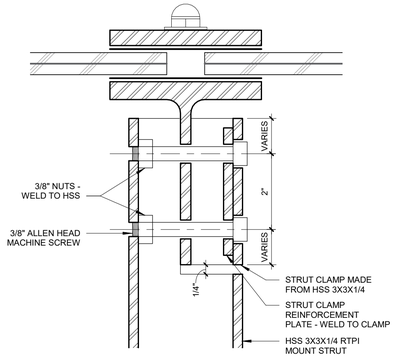

7 DETAIL - RTPI MOUNT
6" = 1'-0"

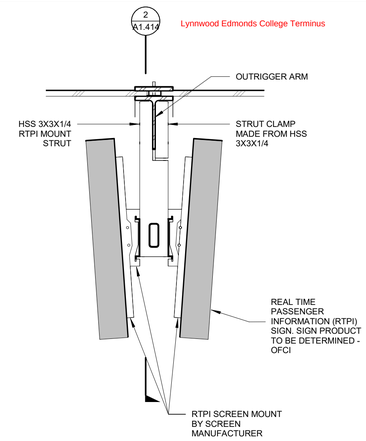

6 RTPI - SECTION
1 1/2" = 1'-0"

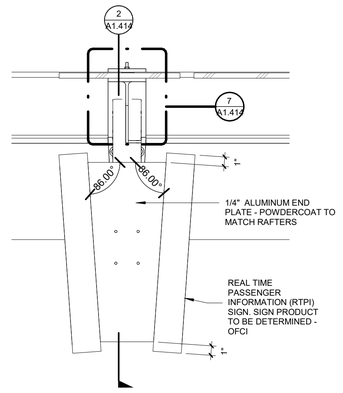

5 RTPI - SIDE ELEVATION
1 1/2" = 1'-0"

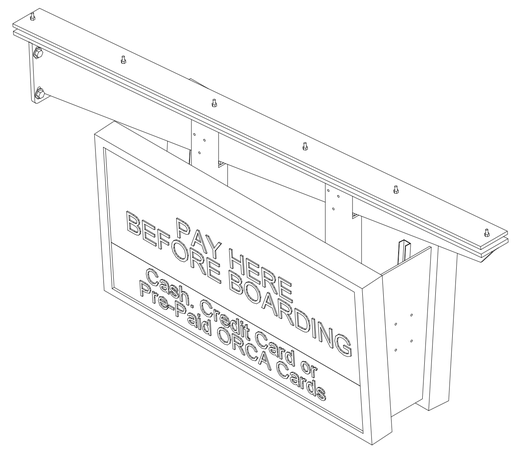

4 AXON - RTPI DISPLAY

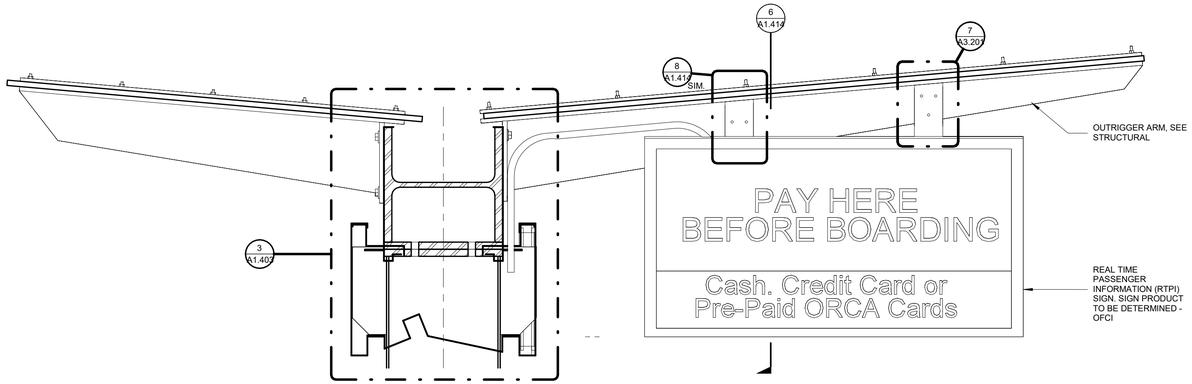

3 RTPI - FRONT ELEVATION
1 1/2" = 1'-0"

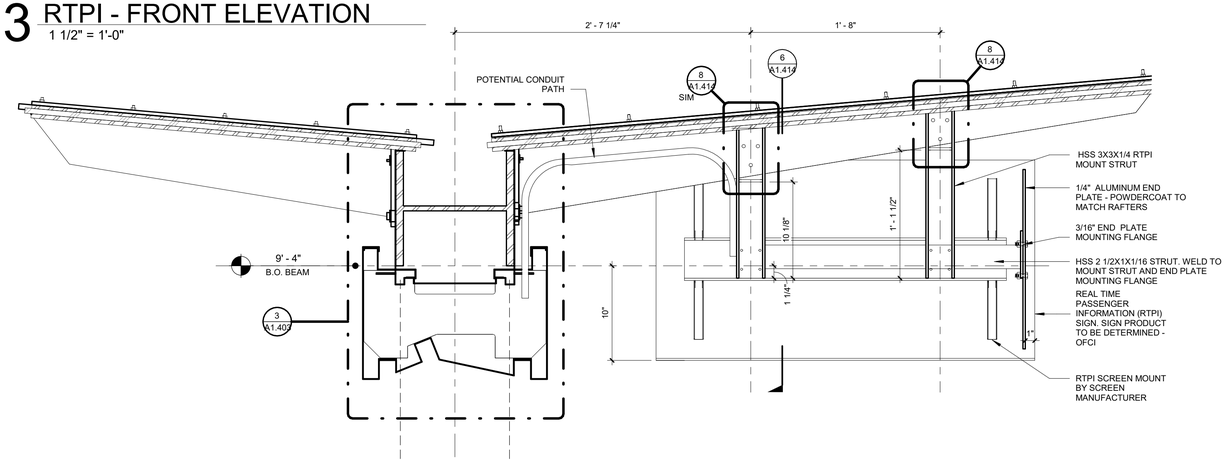

2 RTPI - LONGITUDINAL SECTION
1 1/2" = 1'-0"

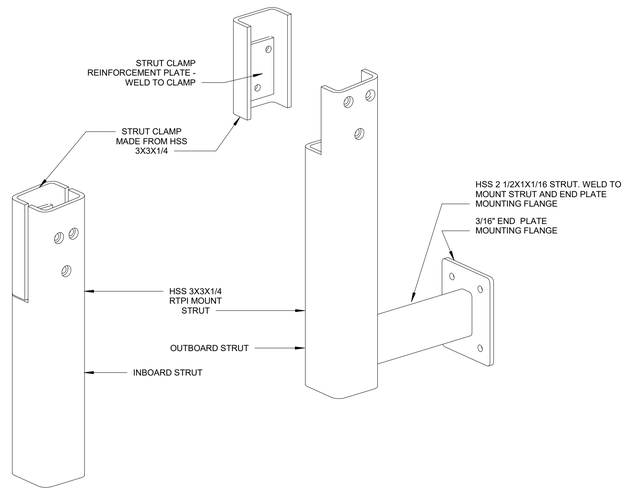

1 RTPI MOUNT COMPONENTS

DESIGNER	DRAWN BY	CHECKED BY
SC & NT	SC & NT	KGT

NO.	REVISION COMMENTS	BY	REVIEW	DATE
1	100% Submittal, Final	KGT	KGT	3/22/2022

PIVOT ARCHITECTURE

13052 REGISTERED ARCHITECT
KARI GREENE TURNER
STATE OF WASHINGTON

community transit
Swift
ORANGE LINE - 100% SUBMITTAL
ORANGE LINE PLATFORM ARCHITECTURAL PLANS
REAL TIME PASSENGER INFORMATION DISPLAY

TITLE

Otak

11241 Willows Road NE, Suite 200
Redmond, WA 98052
425.822.4446
www.otak.com

32880.H
PROJECT NUMBER

A1.414
DRAWING NO.

SHEET 451 OF 622

© 2021 OTAK, INC.



TICKETS | INFORMATION | LINK LIGHT RAIL | PARK & RIDE | GREEN LINE | ORANGE LINE | COMMUNITY TRANSIT SWIFT

1 GRAPHIC SYMBOLS, BRANDMARKS
NO SCALE

	1	2	3	4	5
ACRYLIC	A1 TRANSLUCENT WHITE				
VINYL		V2 OPAQUE BLACK 3M BLACK 3650-12	V3 TRANSLUCENT BLUE 3M BRIGHT BLUE 3630-167	V4 TRANSLUCENT GREEN 3M LIME GREEN 3630-136	V5 TRANSLUCENT ORANGE 3M TANGERINE 3630-84
PAINT	P1 OPAQUE WHITE REF ARCHITECTURAL FINISHES		P3 OPAQUE BLUE REF ARCHITECTURAL FINISHES		

3 FINISHES
NO SCALE

abcdefghilklmnopqrstuvwxyz
ABCDEFGHIJKLMNOPQRSTUV
WXYZ1234567890

TRANSIT NORMAL: FOR TACTILE SIGNS

abcdefghilklmnopqrstuvwxyz
ABCDEFGHIJKLMNOPQRSTUV
WXYZ1234567890

TRANSIT FRONT NEGATIVE NORMAL: FOR OVERHEAD SIGNS

abcdefghilklmnopqrstuvwxyz
ABCDEFGHIJKLMNOPQRSTUV
WXYZ1234567890

TRANSIT FRONT NEGATIVE BOLD: FOR OVERHEAD SIGNS

2 FONTS
NO SCALE

DESIGNER	DRAWN BY	CHECKED BY
XXX	XXX	XXX

NO.	REVISION COMMENTS	BY	REVIEW	DATE

ILIUM

communitytransit Swift

ORANGE LINE 100% SUBMITTAL
ORANGE LINE PLATFORM ARCHITECTURAL PLANS
STATION SIGNAGE DETAILS

TITLE

Otak

11241 Willows Road NE, Suite 200
Redmond, WA 98052
425.822.4446
www.otak.com

32880.H
PROJECT NUMBER

A1.500

DRAWING NO.

SHEET 452 OF 622

© 2021 OTAK, INC.

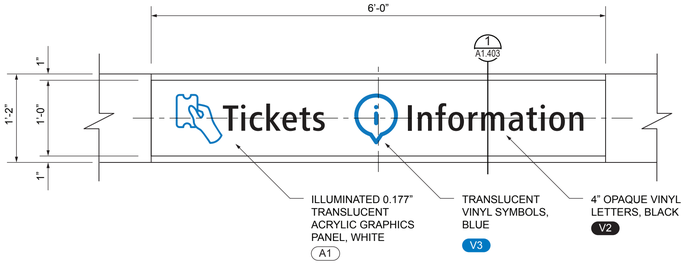

NOTE:
GRAPHIC CONTENT DOES NOT VARY

1 DETAIL - TICKETS & INFORMATION SIGN - NEW ORANGE AND BLUE LINE STATIONS

1" = 1'-0"

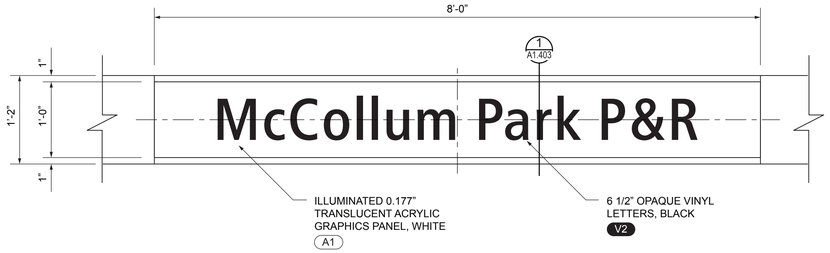

NOTE:
GRAPHIC CONTENT VARIES PER LOCATION

2 DETAIL - STATION NAME SIGN - NEW ORANGE AND BLUE LINE STATIONS

1" = 1'-0"

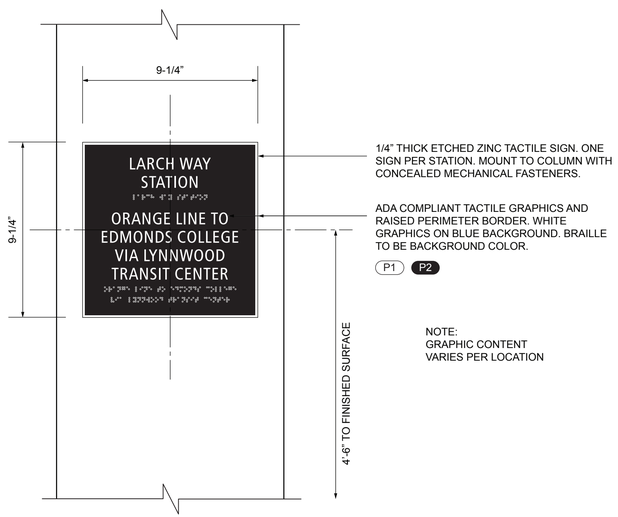

NOTE:
GRAPHIC CONTENT VARIES PER LOCATION

4 DETAIL - TACTILE SIGN - NEW ORANGE AND BLUE LINE STATIONS

3" = 1'-0"

NOTES:

1. VERIFY ALL SIGN MESSAGES WITH OWNER PRIOR TO FABRICATION.

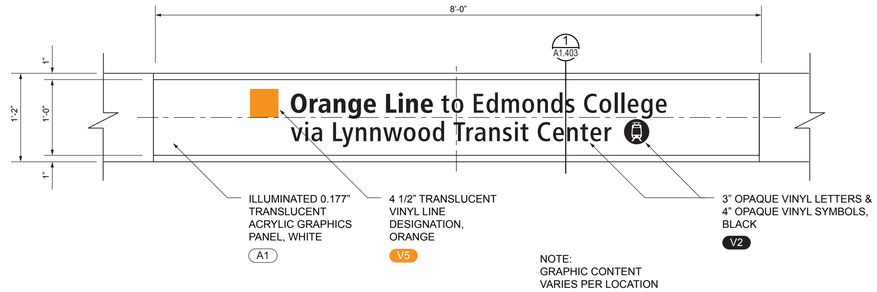

NOTE:
GRAPHIC CONTENT VARIES PER LOCATION

TYP ORANGLE LINE WESTBOUND



TYP ORANGE LINE EASTBOUND

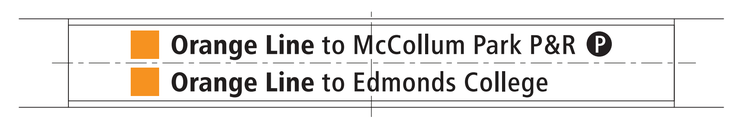

SPECIAL CONDITION AT ORANGLE LINE ASH WAY PARK & RIDE (SINGLE BI-DIRECTIONAL SHELTER)

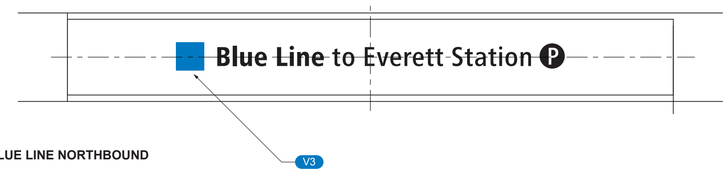

TYP BLUE LINE NORTHBOUND

3 DETAIL - DIRECTION OF TRAVEL SIGN - NEW ORANGE AND BLUE LINE STATIONS

1" = 1'-0"

NO.	REVISION COMMENTS	BY	REVIEW	DATE

DESIGNER XXX | DRAWN BY XXX | CHECKED BY XXX

ILIUM

community transit Swift

ORANGE LINE 100% SUBMITTAL
ORANGE LINE PLATFORM ARCHITECTURAL PLANS
STATION SIGNAGE DETAILS

TITLE

Otak

11241 Willows Road NE, Suite 200
Redmond, WA 98052
425.822.4446
www.otak.com

32880.H
PROJECT NUMBER

A1.501

DRAWING NO.

SHEET 453 OF 622

© 2021 OTAK, INC.

NOTES:

1. VERIFY ALL SIGN MESSAGES WITH OWNER PRIOR TO FABRICATION.

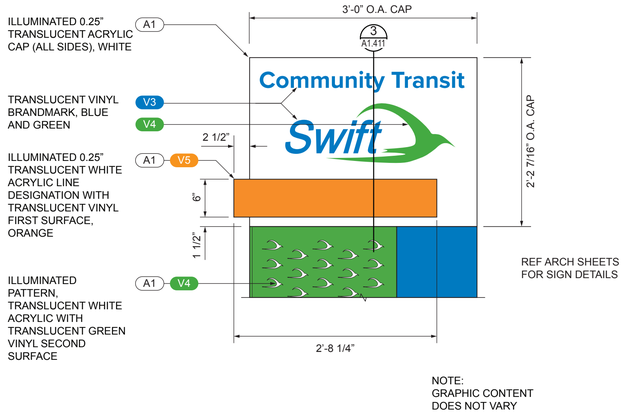

ARRIVAL SIDE

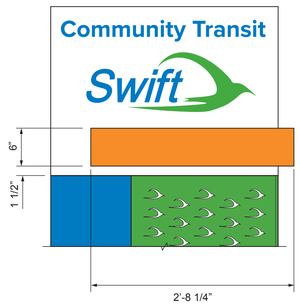

DEPARTURE SIDE

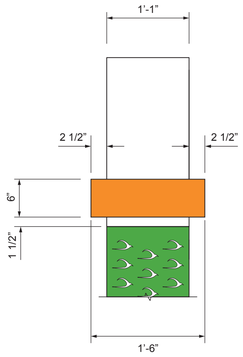

CURB SIDE

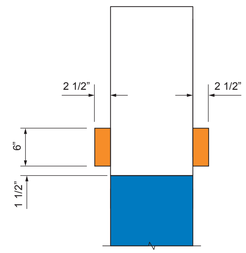

BACK SIDE

TYP NEW ORANGE LINE STATION

ARRIVAL SIDE

DEPARTURE SIDE

CURB SIDE

BACK SIDE

TYP NEW BLUE LINE STATION

1 DETAIL - ICONIC MARKER SIGN - NEW ORANGE AND BLUE LINE STATIONS

1" = 1'-0"

NO.	REVISION COMMENTS	BY	REVIEW	DATE
				100% Submittal, Fall 3/22/2022

DESIGNER XXX
DRAWN BY XXX
CHECKED BY XXX

ILIUM

communitytransit Swift

ORANGE LINE 100% SUBMITTAL
ORANGE LINE PLATFORM ARCHITECTURAL PLANS
STATION SIGNAGE DETAILS

TITLE

Otak
11241 Willows Road NE, Suite 200
Redmond, WA 98052
425.822.4446
www.otak.com

32880.H
PROJECT NUMBER

A1.502
DRAWING NO,

SHEET 454 OF 622

© 2021 OTAK, INC.

NOTES:

1. VERIFY ALL SIGN MESSAGES WITH OWNER PRIOR TO FABRICATION.

STATION	STATION NAME SIGN	DIRECTION OF TRAVEL SIGN WESTBOUND	DIRECTION OF TRAVEL SIGN EASTBOUND	TACTILE SIGN WESTBOUND	TACTILE SIGN EASTBOUND
MCCOLLUM PARK TERMINI	McCollum Park P&R	Orange Line to Edmonds College via Lynnwood Transit Center	N/A	MCCOLLUM PARK PARK & RIDE STATION ORANGE LINE TO EDMONDS COLLEGE VIA LYNNWOOD TRANSIT CEN TER	N/A
164TH ST SE @ MILL CREEK RD	Mill Creek Blvd	Orange Line to Edmonds College via Lynnwood Transit Center	N/A	MILL CREEK BLVD STATION ORANGE LINE TO EDMONDS COLLEGE VIA LYNNWOOD TRANSIT CENTER	N/A
164TH ST SW @ NORTH RD	NORTH RD	Orange Line to Edmonds College via Lynnwood Transit Center	Orange Line to McCollum Park P&R via Mill Creek Town Center	NORTH RD STATION ORANGE LINE TO EDMONDS COLLEGE VIA LYNNWOOD TRANSIT CENTER	NORTH RD STATION ORANGE LINE TO MCCOLLUM PARK & RIDE VIA MILL CREEK TOWN CENTER
164TH ST SW @ LARCH WAY	Larch Way	Orange Line to Edmonds College via Lynnwood Transit Center	Orange Line to McCollum Park P&R via Mill Creek Town Center	LARCH WAY STATION ORANGE LINE TO EDMONDS COLLEGE VIA LYNNWOOD TRANSIT CENTER	LARCH WAY STATION ORANGE LINE TO MCCOLLUM PARK PARK & RIDE VIA MILL CREEK TOWN CENTER
ASH WAY P&R	Ash Way P&R	Orange Line to Edmonds College Orange Line to McCollum Park P&R	N/A - SINGLE BI-DIRECTIONAL SHELTER AT THIS LOCATION	ASH WAY PARK & RIDE STATION ORANGE LINE TO EDMONDS COLLEGE ORANGE LINE TO MCCOLLUM PARK PARK & RIDE	N/A - SINGLE BI-DIRECTIONAL SHELTER AT THIS LOCATION
164TH ST SW @ SWAMP CREEK P&R	Swamp Creek P&R	Orange Line to Edmonds College via Lynnwood Transit Center	Orange Line to McCollum Park P&R via Mill Creek Town Center	SWAMP CREEK PARK & RIDE STATION ORANGE LINE TO EDMONDS COLLEGE VIA LYNNWOOD TRANSIT CENTER	SWMAP CREEK PARK & RIDE STATION ORANGE LINE TO MCCOLLUM PARK PARK & RIDE VIA MILL CREEK TOWN CENTER
36TH AVE W @ MAPLE RD	Maple Rd	Orange Line to Edmonds College via Lynnwood Transit Center	Orange Line to McCollum Park P&R via Mill Creek Town Center	MAPLE RD STATION ORANGE LINE TO EDMONDS COLLEGE VIA LYNNWOOD TRANSIT CENTER	MAPLE RD STATION ORANGE LINE TO MCCOLLUM PARK PARK & RIDE VIA MILL CREEK TOWN CENTER
33RD AVE W @ 188TH ST SW	188th St SW	Orange Line to Edmonds College via Lynnwood Transit Center	Orange Line to McCollum Park P&R via Mill Creek Town Center	188TH ST SW STATION ORANGE LINE TO EDMONDS COLLEGE VIA LYNNWOOD TRANSIT CENTER	188TH ST SW STATION ORANGE LINE TO MCCOLLUM PARK PARK & RIDE VIA MILL CREEK TOWN CENTER
196TH ST SW @ SR 99	SR 99	Orange Line to Edmonds College	Orange Line to McCollum Park P&R via Mill Creek Town Center	SR 99 STATION ORANGE LINE TO EDMONDS COLLEGE	SR 99 STATION ORANGE LINE TO MCCOLLUM PARK PARK & RIDE VIA MILL CREEK TOWN CENTER
EDMONDS COLLEGE TERMINI	Edmonds College	N/A	Orange Line to McCollum Park P&R via Mill Creek Town Center	N/A	EDMONDS COLLEGE STATION ORANGE LINE TO MCCOLLUM PARK PARK & RIDE VIA MILL CREEK TOWN CENTER

1 SIGN MESSAGE SCHEDULE - NEW ORANGE LINE STATIONS

NO SCALE

STATION	STATION NAME SIGN	DIRECTION OF TRAVEL SIGN NORTHBOUND	DIRECTION OF TRAVEL SIGN SOUTHBOUND	TACTILE SIGN NORTHBOUND	TACTILE SIGN SOUTHBOUND
SR 99 @ 196TH ST SW	196th St SW	Blue Line to Everett Station	N/A	196TH ST SW STATION BLUE LINE TO EVERETT STATION	N/A

2 SIGN MESSAGE SCHEDULE - NEW BLUE LINE STATION

NO SCALE

DESIGNER	DRAWN BY	CHECKED BY
XXX	XXX	XXX

NO.	REVISION COMMENTS	BY	REVIEW	DATE
				100% Submittal, Final 3/22/2022

ILIUM

community transit Swift

ORANGE LINE 100% SUBMITTAL
ORANGE LINE PLATFORM ARCHITECTURAL PLANS
STATION SIGNAGE DETAILS

TITLE

Otak
11241 Willows Road NE, Suite 200
Redmond, WA 98052
425.822.4446
www.otak.com

32880.H
PROJECT NUMBER

A1.503
DRAWING NO.

SHEET 455 OF 622

© 2021 OTAK, INC.

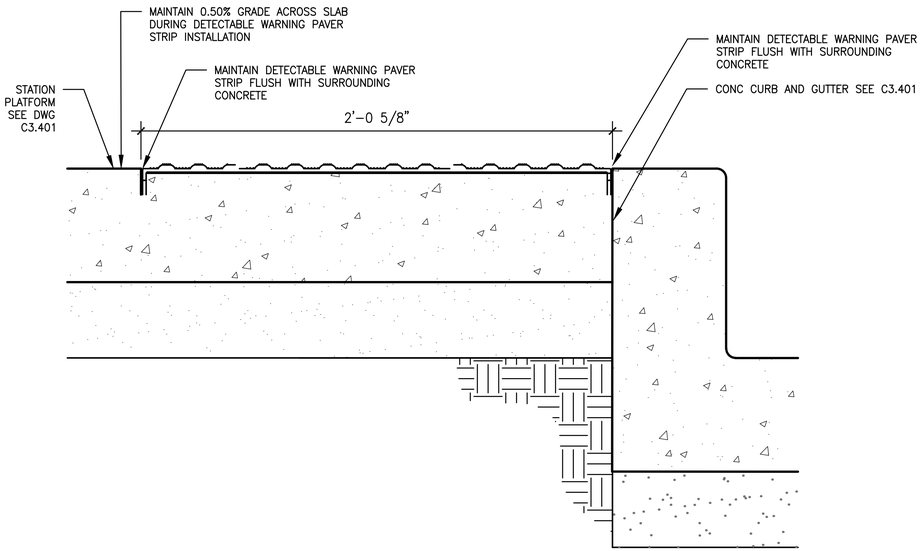

STATION PLATFORM DETECTABLE WARNING STRIP DETAIL

SCALE: 3" = 1' - 0"

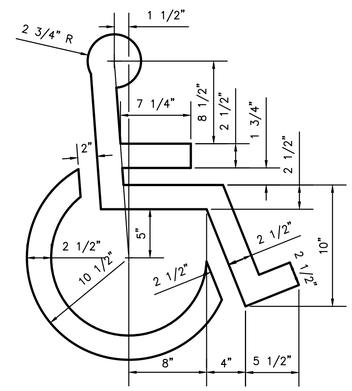

NOTE: SEE STATION PLATFORM GRAPHICS SPECIFICATIONS FOR MATERIAL AND INSTALLATION DETAILS

BOARDING AREA HANDICAP SYMBOL

NOT TO SCALE

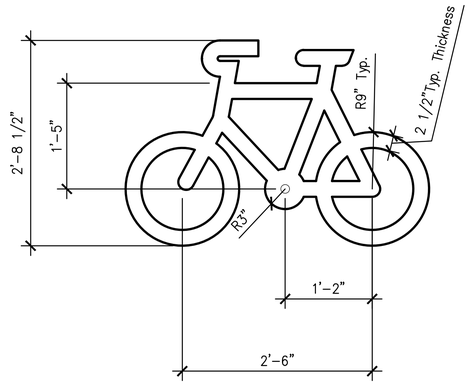

NOTE: SEE STATION PLATFORM GRAPHICS SPECIFICATIONS FOR MATERIAL AND INSTALLATION DETAILS

BOARDING AREA BICYCLE SYMBOL

NOT TO SCALE

CALL BEFORE YOU DIG 1-800-424-5555

NO.	REVISION COMMENTS	BY	REVIEW	DATE

DESIGNER

DRAWN BY

CHECKED BY

JEDIAH SHAPLEY
STATE OF WASHINGTON
40896
REGISTERED PROFESSIONAL ENGINEER

9/24/21

community transit
Swift ORANGE LINE - 100% SUBMITTAL
STATION PLATFORM & GRAPHICS PLAN DETAILS

TITLE

Otak
11241 Willows Road NE, Suite 200
Redmond, WA 98052
425.822.4446
www.otak.com

32880 H
PROJECT NUMBER

A4.100
DRAWING NO.

SHEET 469 OF 622

© 2021 OTAK, INC.

Plotted: Sep 24, 2021 - 2:49pm K:\Project\32800\32880H\CADD\ACAD\Dwg\A4.100-A5.100.dwg Layout Name: A4.100

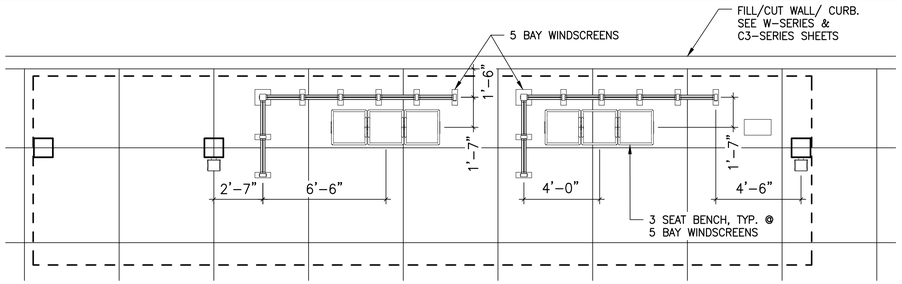

WINDSCREEN CONFIGURATION 1 TYP.

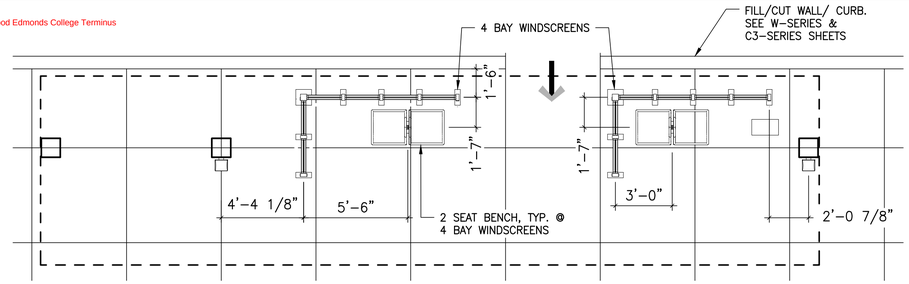

WINDSCREEN CONFIGURATION 4, REAR ENTRY

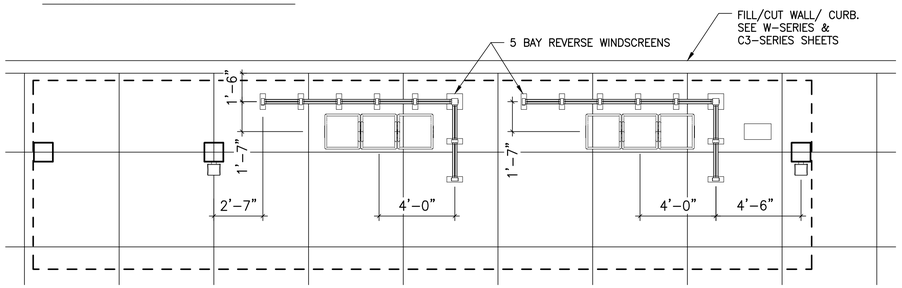

WINDSCREEN CONFIGURATION 2

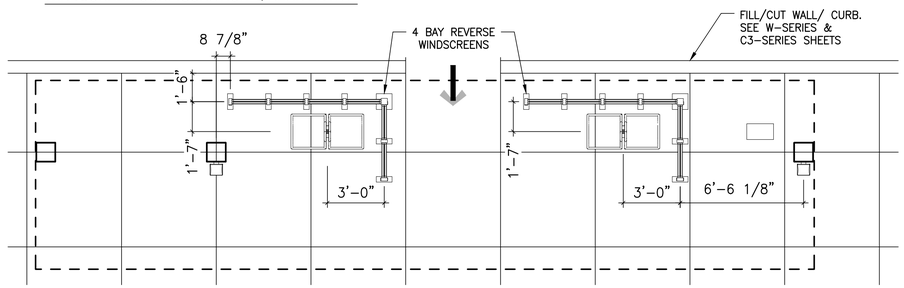

WINDSCREEN CONFIGURATION 5, REAR ENTRY

NOT USED

WINDSCREEN CONFIGURATION 3

ORANGE LINE PLATFORM WINDSCREEN CONFIGURATIONS

SCALE: 1/4" = 1' - 0"

STATION LOCATION	DIRECTION	STATION ID	WINDSCREEN CONFIGURATION
Western Terminus – Edmonds College	EB & WB	3221/3222	1
SR 524/196th St SW at SR 99	EB	3225	4
SR 524/196th St SW at SR 99	WB	3246	2
SR 99 at SR 524/196th St SW	NB	Blue Line #3247	1
Lynnwood Transit Center	EB	3228	SEE A3-SERIES
Lynnwood Transit Center	WB	3244	SEE A3-SERIES
33rd Ave W at 188th St SW	EB/NB	3229	1
33rd Ave W at 188th St SW	WB/SB	3243	4
36th Ave W at Maple Rd	EB/NB	3230	1
36th Ave W at Maple Rd	WB/SB	3242	1
164th St SW at Swamp Creek P&R	EB	3232	1
164th St SW at Swamp Creek P&R	WB	3240	2
Ash Way P&R	EB & WB	3233/3239	2
164th St SW at Larch Way	EB	3238	1
164th St SW at Larch Way	WB	3234	2
164th St SW at North Rd	EB	3237	1
164th St SW at North Rd	WB	3235	5
164th St SE at 9th Ave SE/Mill Creek Blvd	WB	3236	5
Eastern Terminus – McCollum Park P&R	EB & WB	3223/3224	1

ORANGE LINE STATION AND TERMINI WINDSCREEN CONFIGURATION TABLE

CALL BEFORE YOU DIG 1-800-424-5555

NO.	REVISION COMMENTS	BY	REVIEW	DATE

DESIGNER | DRAWN BY | CHECKED BY

1st Submittal, 3/22/2022



9/24/21

100% SUBMITTAL

communitytransit
Swift ORANGE LINE

WINDSCREEN CONFIGURATIONS

TITLE

Otak
11241 Willows Road NE, Suite 200
Redmond, WA 98052
425.822.4446
www.otak.com

32880.H
PROJECT NUMBER

A5.100
DRAWING NO.

SHEET 470 OF 622

© 2021 OTAK, INC.

Plotted: Sep 24, 2021 - 2:49pm K:\Project\32800\32880H\CADD\ACAD\Dwg\A4.100-A5.100.dwg Layout Name: A5.100

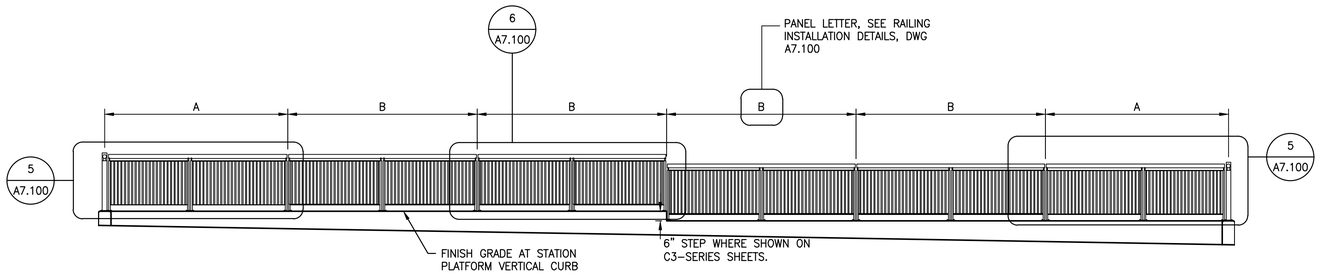

ELEVATION A

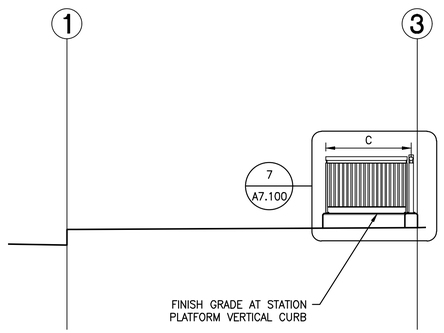

ELEVATION B

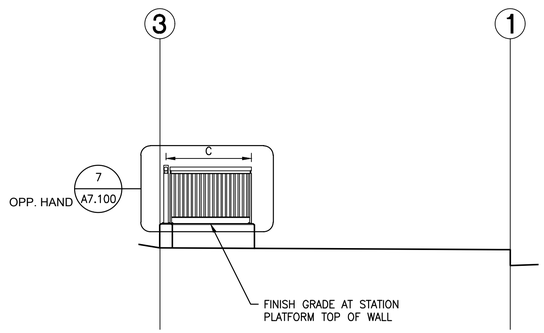

ELEVATION C

1 WESTERN TERMINUS - EDMONDS COLLEGE RAILING ELEVATIONS (STATION # EB 3221/WB 3222) - BARRIER RAILING
SCALE: 1/4" = 1'-0"

NOTES

1. RAILING TO BE OWNER FURNISHED, AND CONTRACTOR INSTALLED. SEE PROJECT SPECIFICATIONS.

SYMBOL LEGEND

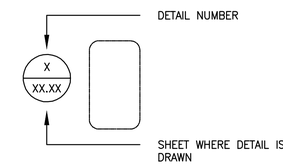

DETAIL ENLARGEMENT



STRUCTURAL GRID
SEE A1-SERIES

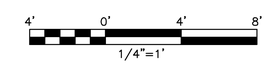

CALL BEFORE YOU DIG 1-800-424-5555

NO.	REVISION COMMENTS	BY	REVIEW	DATE

DESIGNER | DRAWN BY | CHECKED BY



9/30/21

communitytransit
Swift ORANGE LINE - 100% SUBMITTAL
STATION RAILING ELEVATIONS
WESTERN TERMINUS-EDMONDS COLLEGE (STATION # EB 3221 & WB 3222)

TITLE

Otak

11241 Willows Road NE, Suite 200
Redmond, WA 98052
425.822.4446
www.otak.com

32880.H
PROJECT NUMBER

A6.100
DRAWING NO.

SHEET 471 OF 622

© 2021 OTAK, INC.

Plotted: Oct 01, 2021 - 9:49am K:\Project\32800\32880H\CADD\ACAD\Dwg\A6.100-A6.102.dwg Layout Name: A6.100

PDR-009731-2021

Lynnwood Edmonds College Terminus

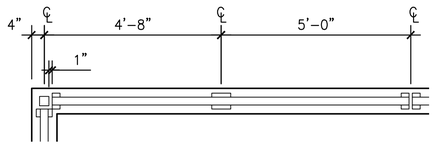

1 RAILING PLAN - PANEL A, E
SCALE: 1/2" = 1'-0"

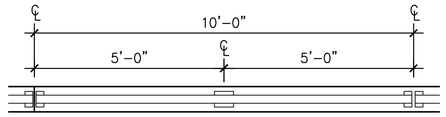

2 RAILING PLAN - PANEL B, F
SCALE: 1/2" = 1'-0"

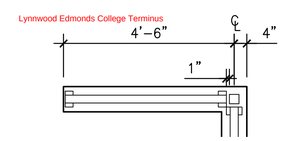

3 RAILING PLAN - PANEL C, G
SCALE: 1/2" = 1'-0"

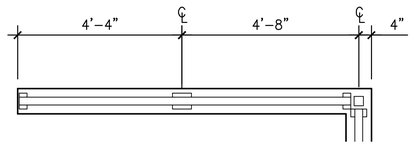

4 RAILING PLAN - PANEL D
SCALE: 1/2" = 1'-0"

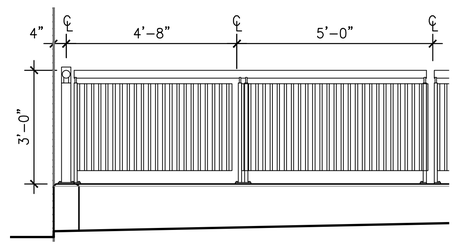

5 RAILING ELEVATION - PANEL A
SCALE: 1/2" = 1'-0"

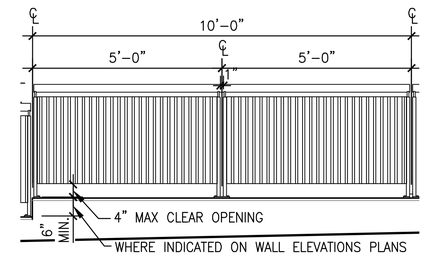

6 RAILING ELEVATION - PANEL B
SCALE: 1/2" = 1'-0"

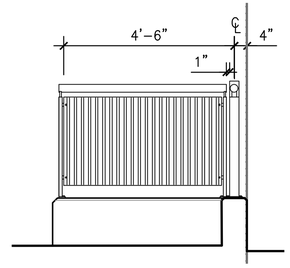

7 RAILING ELEVATION - PANEL C
SCALE: 1/2" = 1'-0"

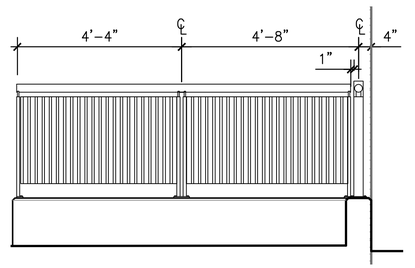

8 RAILING ELEVATION - PANEL D
SCALE: 1/2" = 1'-0"

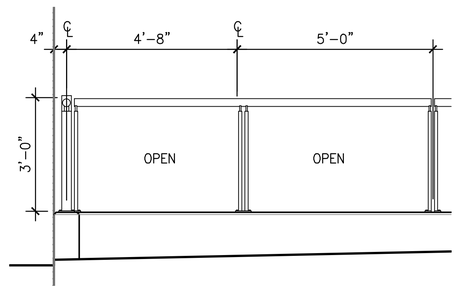

9 RAILING ELEVATION - PANEL E
SCALE: 1/2" = 1'-0"

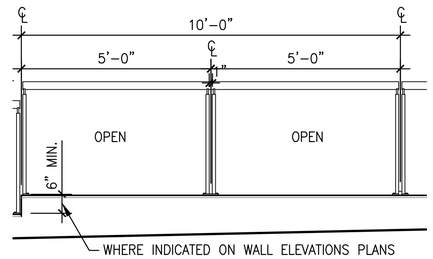

10 RAILING ELEVATION - PANEL F
SCALE: 1/2" = 1'-0"

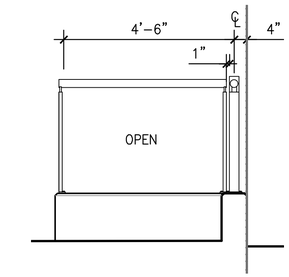

11 RAILING ELEVATION - PANEL G
SCALE: 1/2" = 1'-0"

NOT USED

12 RAILING ELEVATION - PANEL H
SCALE: 1/2" = 1'-0"

NOTE

1. RAILING TO BE OWNER FURNISHED, AND CONTRACTOR INSTALLED. SEE PROJECT SPECIFICATIONS.

2' 0' 2' 4'
1/2"=1'

CALL BEFORE YOU DIG 1-800-424-5555

NO.	REVISION COMMENTS	BY	REVIEW	DATE

DESIGNER | DRAWN BY | CHECKED BY

Lynnwood Submittal, 4/2/21 3/22/2022

WINDI A. SHAPLEY
STATE OF WASHINGTON
40896
REGISTERED PROFESSIONAL ENGINEER
9/30/21

communitytransit
Swift ORANGE LINE - 100% SUBMITTAL
STATION RAILING DETAILS

TITLE

Otak
11241 Willows Road NE, Suite 200
Redmond, WA 98052
425.822.4446
www.otak.com

32880.H
PROJECT NUMBER

A7.100
DRAWING NO.

SHEET 474 OF 622

© 2021 OTAK, INC.

Plotted: Oct 01, 2021 - 9:49am K:\Project\32800\32880H\CADD\ACAD\Dwg\A7.100.dwg Layout Name: A7.100

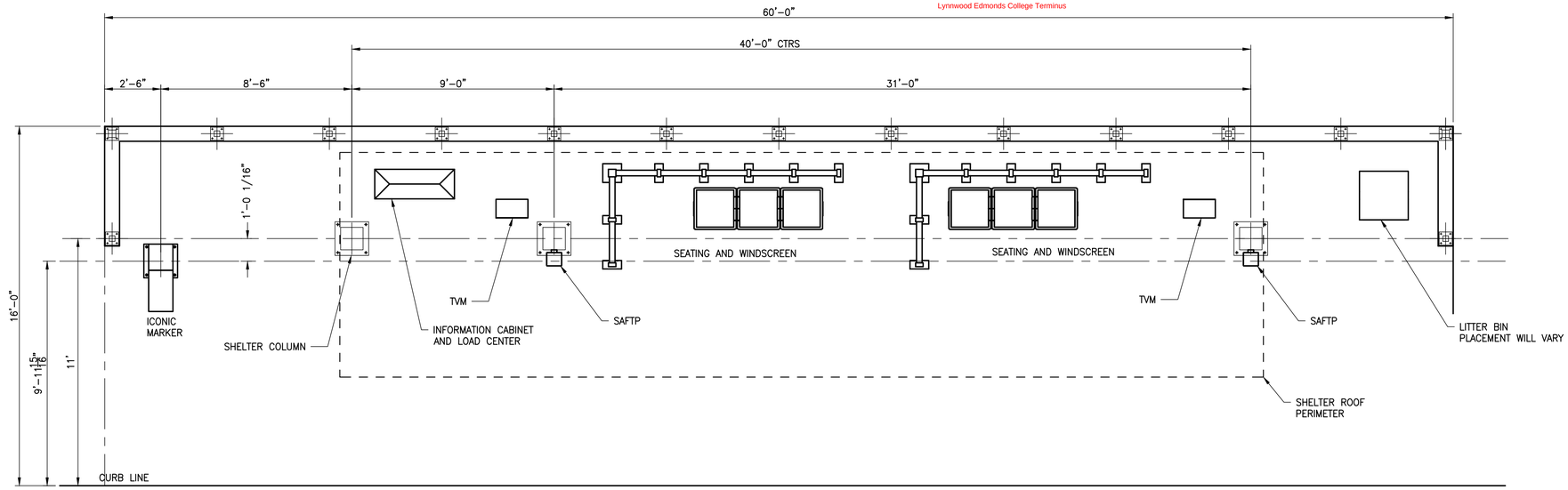

PLAN VIEW

SCALE: 1" = 3'–0"

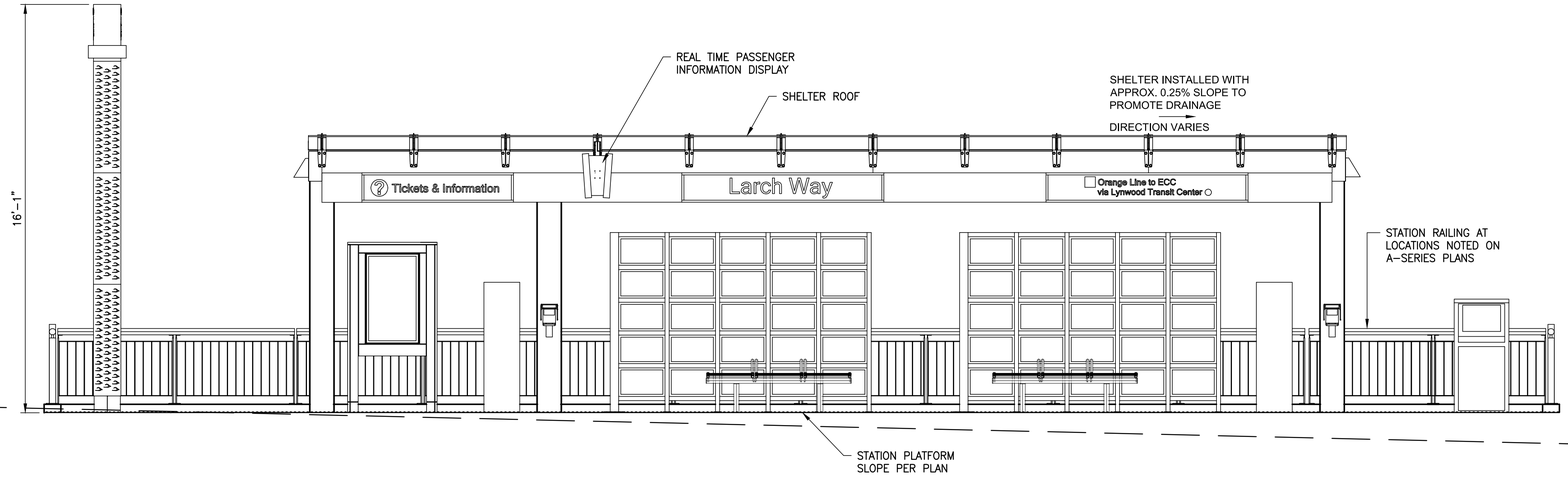

FRONT ELEVATION

SCALE: 1" = 3'–0"

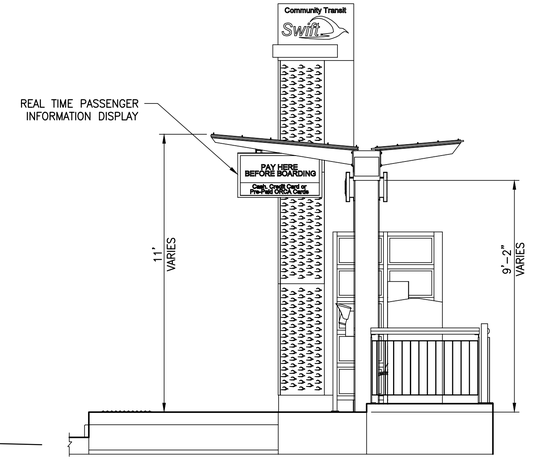

SIDE ELEVATION

SCALE: 1" = 3'–0"

CALL BEFORE YOU DIG 1–800–424–5555

NO.	REVISION COMMENTS	BY	REVIEW	DATE

DESIGNER

DRAWN BY

CHECKED BY

ROBERT P. DOHERTY — STATE OF WASHINGTON — 43425 — REGISTERED PROFESSIONAL ENGINEER

11/5/21

communitytransit

Swift ORANGE LINE – 100% SUBMITTAL

STATION SHELTER & AMENITIES

STATION SHELTER OVERVIEW

TITLE

Otak

11241 Willows Road NE, Suite 200
Redmond, WA 98052
425.822.4446
www.otak.com

32880.H
PROJECT NUMBER

S1.1
DRAWING NO.

SHEET 475 OF 622

© 2021 OTAK, INC.

Plotted: Nov 05, 2021 – 7:53pm K:\Project\32800\32880H\CADD\ACAD\Dwg\S1.1.dwg Layout Name: S1.1

PDR-009731-2021

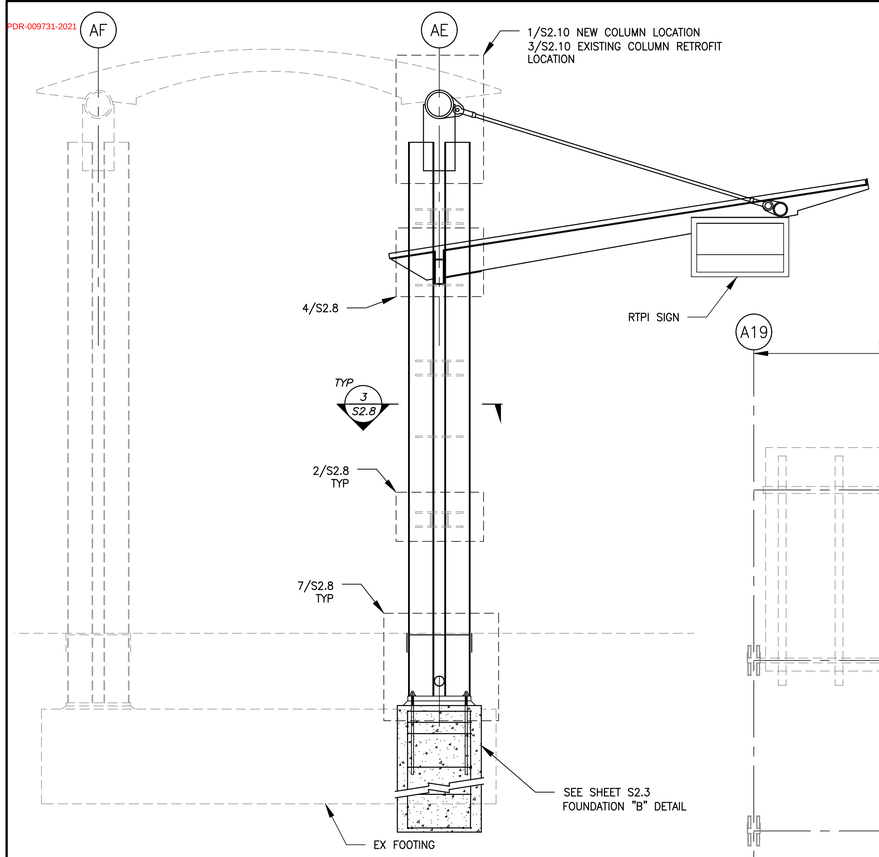

END ELEVATION

SCALE: 1/2" = 1'–0"

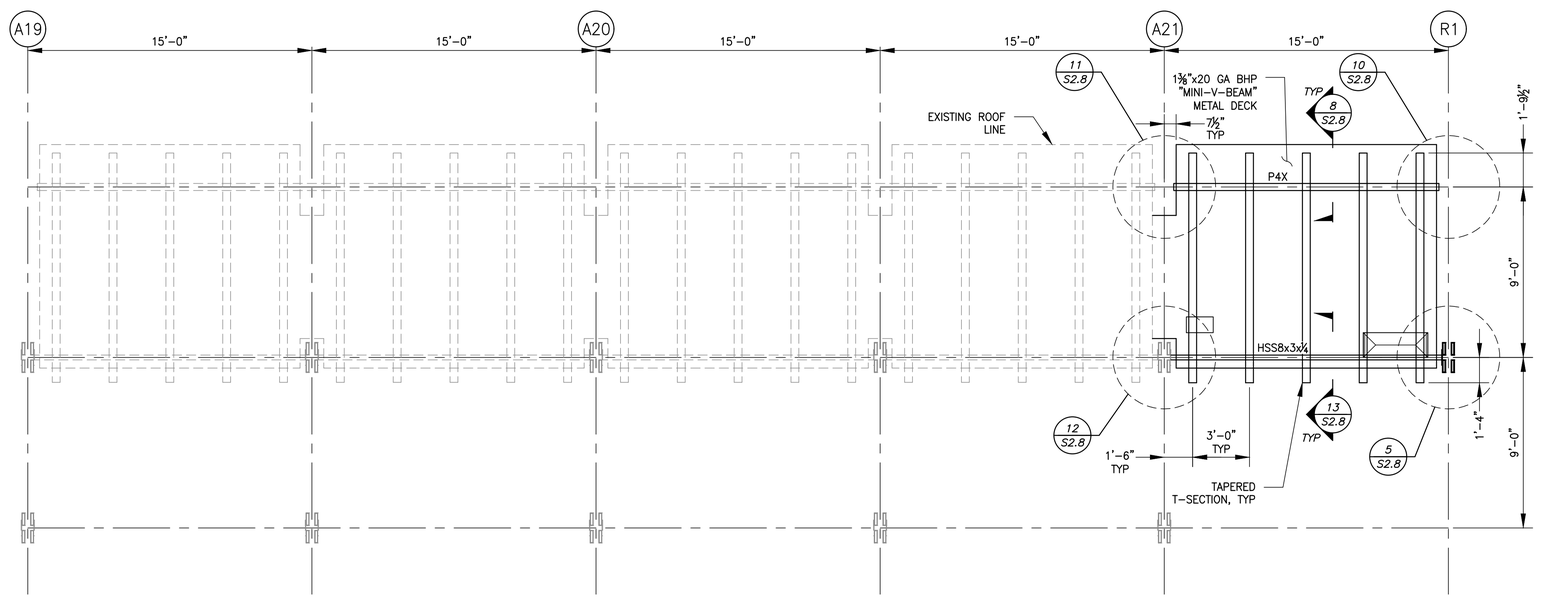

LYNNWOOD TRANSIT CENTER LOWER ROOF PLAN

SCALE: 1/4" = 1'–0"

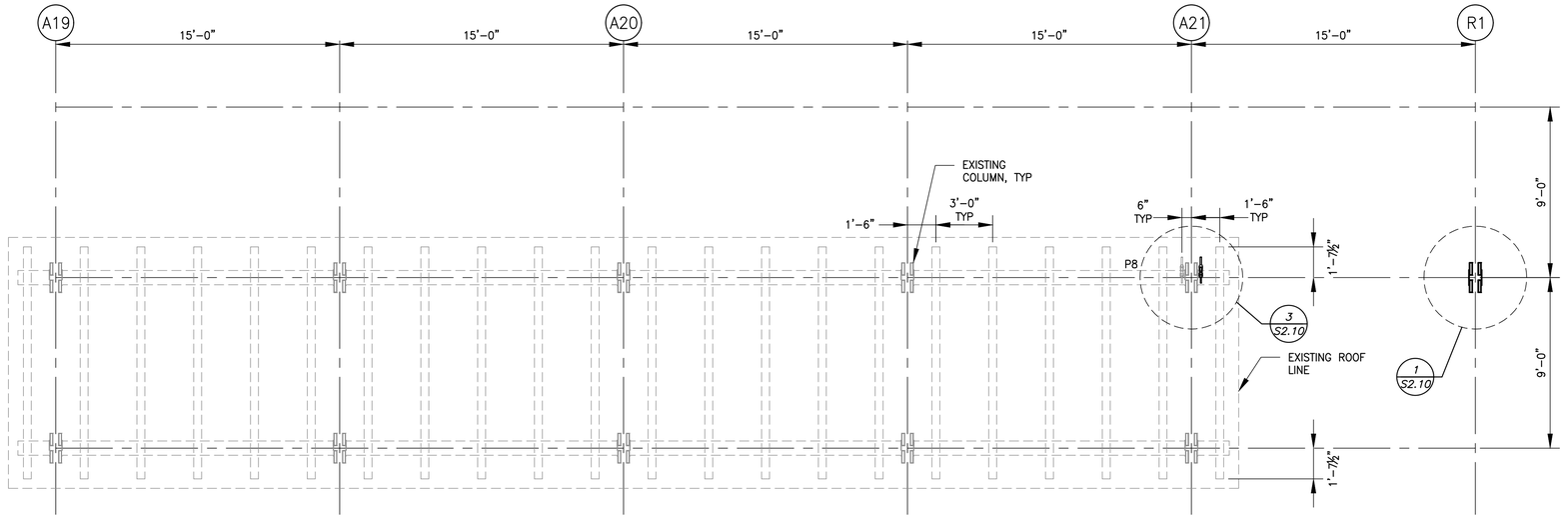

LYNNWOOD TRANSIT CENTER UPPER ROOF PLAN

SCALE: 1/4" = 1'–0"

NO.	REVISION COMMENTS	BY	REVIEW	DATE

DESIGNER

DRAWN BY

CHECKED BY

PDR Submittal, 3/22/2022

ROBERT P. DOHERTY
STATE OF WASHINGTON
43425
REGISTERED
PROFESSIONAL ENGINEER

11/5/21

Swift ORANGE LINE – 100% SUBMITTAL

STATION SHELTER & AMENITIES
STRUCTURAL OUTLINE GENERAL ASSEMBLY - LTC

TITLE

Otak
11241 Willows Road NE, Suite 200
Redmond, WA 98052
425.822.4446
www.otak.com

32880.H
PROJECT NUMBER

S1.2
DRAWING NO.

SHEET 476 OF 622

© 2021 OTAK, INC.

CALL BEFORE YOU DIG 1–800–424–5555

Plotted: Nov 05, 2021 – 7:55pm K:\Project\32800\32880H\CADD\ACAD\Dwg\S1.2.dwg Layout Name: S1.2

PDR-009731-2021

ABBREVIATIONS

(A)	ABOVE (AT BEAMS OR COLUMNS)
AB	ANCHOR BOLT
ABT	ABOUT
ABV	ABOVE
A/C	ASPHALTIC CONCRETE PAVEMENT
ACI	AMERICAN CONCRETE INSTITUTE
ADJ	ADJACENT; ADJUST
ADDL	ADDITIONAL
AGGR	AGGREGATE
AISC	AMERICAN INSTITUTE OF STEEL CONSTRUCTION
AITC	AMERICAN INSTITUTE OF TIMBER CONSTRUCTION
ALT	ALTERNATE; ALTERNATIVE
ALUM	ALUMINUM
APPROX	APPROXIMATE; APPROXIMATELY
ARCH	ARCHITECT; ARCHITECTURAL
ASPH	ASPHALT
ASTM	AMERICAN SOCIETY FOR TESTING MATERIAL
AWS	AMERICAN WELDING SOCIETY
B	BOTTOM (BEAM AND JOIST SCHEDULES ONLY)
(B)	BELOW (AT BEAMS OR COLUMNS)
BD	BOARD
BITUM	BITUMINOUS
℄	BUILDING LINE
BLDG	BUILDING
BLK	BLOCK
BLKG	BLOCKING
BM	BEAM
BOT	BOTTOM
BRG	BEARING
BSMT	BASEMENT
BTWN	BETWEEN
C	AMERICAN STANDARD CHANNEL
CANT	CANTILEVER
CDF	CONTROL DENSITY FILL
CDX	PLYWOOD GRADE
CG	CENTER OF GRAVITY
CGS	STRAND CENTER OF GRAVITY
CIP	CAST–IN–PLACE
CJ	CONSTRUCTION JOINT
CJP	COMPLETE JOINT PENETRATION
℄	CENTER LINE
CLG	CEILING
CLKG	CAULKING
CLR	CLEAR
CMP	CORRUGATED METAL PIPE
CMU	CONCRETE MASONRY UNIT
CO	CONCRETE OPENING
COL	COLUMN
COMP	COMPOSITE
CONC	CONCRETE
CONN	CONNECTION
CONSTR	CONSTRUCTION
CONT	CONTINUOUS
CONTR	CONTRACTOR
CORR	CORRUGATED
CP	COMPLETE PENETRATION
CTJ	CONTROL JOINT; CONTRACTION JOINT
CTR	CENTER
CTSK	COUNTERSUNK
CU	CUBIC
d	PENNY (NAIL SIZING)
DBA	DEFORMED BAR ANCHOR
DBL	DOUBLE
DEMO	DEMOLISH; DEMOLITION
DEPT	DEPARTMENT
DET	DETAIL
DF	DOUGLAS FIR–LARCH
DIA	DIAMETER
DIAG	DIAGONAL
DIAPH	DIAPHRAGM
DIEB	DRILLED–IN EXPANSION BOLT
DIM	DIMENSION
DL	DEAD LOAD
DN	DOWN
do	DITTO
DP	DEEP
DWG	DRAWING
DWL	DOWEL
E	EAST
(E)	EXISTING
EA	EACH
EB	EXPANSION BOLT
EF	EACH FACE
EL	ELEVATION (HEIGHT)
ELEC	ELECTRICAL
ELEV	ELEVATION (VIEW); ELEVATOR
ENCL	ENCLOSURE
ENGR	ENGINEER
EQ	EQUAL
EQJ	EARTHQUAKE JOINT
EQUIP	EQUIPMENT
ES	EACH SIDE
EW	EACH WAY
EXIST	EXISTING
EXJ	EXPANSION JOINT
EXP	EXPANSION
EXT	EXTERIOR
FB	FLAT BAR
FD	FLOOR DRAIN
FDN	FOUNDATION
FEMA	FEDERAL EMERCENCY MANAGEMENT AGENCY
FIG	FIGURE
FIN	FINISH; FINISHED
FF	FAR FACE
FLASH	FLASHING
FLG	FLANGE
FLR	FLOOR
FOS	FACE OF STUDS
FP	FIREPROOF; FULL PENETRATION
FS	FAR SIDE
FT	FOOT; FEET
FTG	FOOTING
FUT	FUTURE
GA	GAGE; GAUGE
GALV	GALVANIZED
GEN	GENERAL
GIRD	GIRDER
GL	GLUE LAMINATED
GND	GROUND
GR	GRADE
GWB	GYPSUM WALL BOARD
GYP	GYPSUM
HAS	HEADED ANCHOR STUD
HD	HOLDOWN
HEF	HORIZONTAL EACH FACE
HF	HEM–FIR
HGR	HANGER
HORIZ	HORIZONTAL
HP	HIGH POINT; HP STEEL SHAPE
HSB	HIGH STRENGTH BOLT
HSS	HOLLOW STRUCTURAL SECTION
HT	HEIGHT
IBC	INTERNATIONAL BUILDING
ICC	INTERNATIONAL CODE COUNCIL
ID	INSIDE DIAMETER
IF	INSIDE FACE
IN	INCH; INCHES
INC	INCORPORATE
INCL	INCLUDE
INFO	INFORMATION
INSUL	INSULATED; INSULATION
INT	INTERIOR
JT	JOINT
JST	JOIST
K	KIP; KIPS (1000 POUNDS)
KD	KILN DRIED
KSF	KIPS PER SQUARE FOOT
KSI	KIPS PER SQUARE INCH
L	STRUCTURAL STEEL ANGLE
LB	POUND
LF	LINEAL FEET
LL	LIVE LOAD
LLBB	LONG LEG BACK TO BACK
LLH	LONG LEGS HORIZONTAL
LLV	LONG LEGS VERTICAL
LONGIT	LONGITUDINAL
LRFD	LOAD RESISTANCE FACTOR DESIGN
LSH	LONG SLOTTED HOLES
LSL	LAMINATED STRAND LUMBER
LT	LIGHT
LT WT	LIGHT WEIGHT
LVL	LEVEL; LAMINATED VENEER LUMBER
M	MISCELLANEOUS STEEL SHAPE
MAS	MASONRY
MATL	MATERIAL
MAX	MAXIMUM
MB	MACHINE BOLT
MC	MISCELLANEOUS CHANNEL STEEL SHAPE
MECH	MECHANICAL
MEMB	MEMBRANE
MEZZ	MEZZANINE
MF	MOMENT FRAME
MFR	MANUFACTURER
MFRG	MANUFACTURING
MIN	MINIMUM
MISC	MISCELLANEOUS
ML	MICRO LAM
MT	STRUCTURAL TEE FROM M SERIES STEEL SHAPE
MTD	MOUNTED
MTL	METAL
N	NORTH
NF	NEAR FACE
NIC	NOT IN CONTRACT
No	NUMBER
NOM	NOMINAL
NS	NEAR SIDE
NTS	NOT TO SCALE
OA	OVERALL
OC	ON CENTER
OD	OUTSIDE DIAMETER
OF	OUTSIDE FACE
OPNG	OPENING
OPP	OPPOSITE
OPT	OPTION; OPTIONAL
OVHD	OVERHEAD
OVS	OVERSIZED
P/C	PRECAST
PCF	POUNDS PER CUBIC FOOT
PERP	PERPENDICULAR
PH	PHASE
℄	PLATE (STEEL); PROPERTY LINE
PL	PLATE (WOOD)
PLC(S)	PLACE(S)
PLWD	PLYWOOD
PP	PARTIAL PENETRATION
P/S	PRESTRESSED
PSF	POUNDS PER SQUARE FOOT
PSI	POUNDS PER SQUARE INCH
PSL	PARALLEL STRAND LUMBER
PT	PRESSURE TREATED
P/T	POST TENSION
PVC	POLYVINYLCHLORIDE
PVMT	PAVEMENT
R	RADIUS
RBS	REDUCED BEAM SECTION
REF	REFERENCE
REINF	REINFORCED; REINFORCEMENT; REINFORCING
REM	REMAINDER
REQD	REQUIRED
RET	RETAINING
RO	ROUGH OPENING
S	SOUTH; S SERIES STEEL SHAPE
SCHED	SCHEDULE
SECT	SECTION
SH ℄	SHEAR PLATE
SHT	SHEET
SHTG	SHEATHING
SIM	SIMILAR
SK	SKETCH
SLBB	SHORT LEGS BACK TO BACK
SMRF	SPECIAL MOMENT RESISTING FRAME
SOG	SLAB ON GRADE
SP	SPIRAL
SPA	SPACE; SPACES; SPACING
SPEC	SPECIFICATION
SPF	SPRUCE PINE–FIR
SQ	SQUARE
SS	STAINLESS STEEL
SSL	SHORT SLOTTED HOLE
ST	STRUCTURAL TEE FROM S SERIES STEEL SHAPE
STA	STATION
STD	STANDARD
STIFF	STIFFENER
STIRR	STIRRUP
STL	STEEL
STRUCT	STRUCTURAL
SUPT	SUPPORT
SUSP	SUSPENDED
SW	SHEAR WALL
SYMM	SYMMETRICAL
T	TOP (BEAM AND JOIST SCHEDULES ONLY); TENDON (POST TENSIONING PLAN ONLY)
T&B	TOP AND BOTTOM
TC	TOP OF CURB
T&G	TONGUE AND GROOVE
TEMP	TEMPERATURE; TEMPORARY
THD	THREADED
THK	THICK
THRU	THROUGH
TJI	TRUSS JOIST
TOC	TOP OF CONCRETE
TOS	TOP OF STEEL; TOP OF SLAB
TOW	TOP OF WALL
TRANSV	TRANSVERSE
TS	STRUCTURAL STEEL TUBING
TYP	TYPICAL
UL	UNDERWRITERS LABORATORY
UON	UNLESS OTHERWISE NOTED
URM	UNREINFORCED MASONRY
USD	ULTIMATE STRESS DESIGN
UT	ULTRASONIC TEST
VEF	VERTICAL EACH FACE
VERT	VERTICAL
VIF	VERTICAL INSIDE FACE
VOF	VERTICAL OUTSIDE FACE
W	WEST; W SERIES STEEL SHAPE
W/	WITH
WD	WIDE; WOOD
WH	WEEP HOLE
W/O	WITHOUT
WP	WATERPROOF; WORK POINT
WPJ	WEAKENED PLANE JOINT
WSD	WORKING STRESS DESIGN
WT	WEIGHT; STRUCTURAL TEE FROM W SERIES STEEL SHAPE
WWF	WELDED WIRE FABRIC
X–SECT	CROSS SECTION
X–STRONG	EXTRA STRONG
YD	YARD
&	AND
@	AT
ϕ	DIAMETER; ROUND
'	FOOT; FEET
"	INCH; INCHES
#	NUMBER; POUND
⊥	PERPENDICULAR

LEGEND

Lynnwood Edmonds College Terminus

SECTION MARK — 2 / S4 — SECTION NUMBER; SHEET WHERE SECTION IS DRAWN

DETAIL MARK — 2 / S4 — DETAIL NUMBER; SHEET WHERE DETAIL IS DRAWN

SUB–SECTION MARK — 3A 3A — DETAIL NUMBER; SUB–SECTION NUMBER

FOOTING MARK — A

STEP IN ELEVATION OF SLAB — 5" 5"

CHANGE OF SLOPE IN TOP OF SLAB

CHANGE OF SLAB THICKNESS

REVISION MARK — 2

PRECAST CONCRETE

BRICK MASONRY

CONCRETE MASONRY UNITS

CONCRETE

PLYWOOD IN SECTION

WOOD SHEAR WALL

PARTY WALL

PLYWOOD DIAPHRAGM, SEE SCHEDULE FOR NAILING REQUIREMENTS

WOOD SHEAR WALL MARK — SW4

WOOD BEARING WALL MARK — BW4

HOLDOWN MARK — 4

MOMENT CONNECTION

POST–TENSIONED TENDON — JACKING END (IF SHOWN); DEAD END (IF SHOWN)

GENERAL NOTES:

THE FOLLOWING NOTES APPLY UNLESS SHOWN OTHERWISE:

CODE:
INTERNATIONAL BUILDING CODE (IBC), 2015 EDITION

LIVE LOAD:
ROOF: 25 PSF (SNOW)

LATERAL LOADS:
WIND PER ANALYTICAL PROCEDURE
WIND: V3s =110 MPH, EXP C, Iw= 1.00
SEISMIC PER EQUIVALENT FORCE METHOD
SEISMIC: Ss= 1.408, Si= 0.547, Fa= 1.000, Fv= 1.500, Ie= 1.0
BASIC SEISMIC FORCE RESISTING SYSTEM: CANTILEVERED COLUMN SYSTEMS.

GENERAL:
ALL MATERIALS AND WORKMANSHIP SHALL CONFORM TO THE INTERNATIONAL BUILDING CODE AND STANDARDS, 2015 EDITION, DRAWINGS, AND SPECIFICATIONS. THE DRAWINGS AND DESIGN ARE BASED ON A COMPLETED CONDITION. ANY TEMPORARY BRACING AND SHORING REQUIRED UNTIL ALL STRUCTURAL CONNECTIONS HAVE BEEN COMPLETED, IS THE RESPONSIBILITY OF THE GENERAL CONTRACTOR.

DRAWINGS INDICATE GENERAL AND TYPICAL DETAILS OF CONSTRUCTION. WHERE CONDITIONS ARE NOT SPECIFICALLY INDICATED, BUT ARE OF A SIMILAR CHARACTER TO DETAILS SHOWN, SIMILAR DETAILS OF CONSTRUCTION SHALL BE USED SUBJECT TO APPROVAL BY THE ARCHITECT & STRUCTURAL ENGINEER. WHERE INFORMATION ON THE DRAWINGS IS IN CONFLICT WITH THE SPECIFICATIONS, THE MOST STRINGENT SHALL APPLY. DO NOT SCALE THE DRAWINGS.

CONTRACTOR'S NOTES:
CONTRACTOR SHALL BE RESPONSIBLE FOR ALL REQUIRED SAFETY PRECAUTIONS AND THE METHODS, TECHNIQUES, AND SEQUENCES OF PROCEDURES REQUIRED TO PERFORM THE WORK. IF ANY ERROR OR OMISSION APPEARS IN THESE DRAWINGS, SPECIFICATIONS, OR OTHER DOCUMENTS, THE CONTRACTOR SHALL NOTIFY THE OWNER IN WRITING OF SUCH OMISSION OR ERROR BEFORE PROCEEDING WITH THE WORK, OR ACCEPT FULL RESPONSIBILITY FOR THE COST TO RECTIFY SAME. VERIFY AND COORDINATE OPENINGS IN FLOORS, WALLS AND ROOF WITH ARCHITECTURAL, MECHANICAL, AND ELECTRICAL DRAWINGS. THE ENGINEER HAS NOT BEEN RETAINED TO PROVIDE DESIGN AND/OR CONSTRUCTION REVIEW SERVICES RELATED TO THE CONTRACTOR'S SAFETY PRECAUTIONS OR TO MEANS, METHODS, TECHNIQUES, SEQUENCES OR PROCEDURES FOR THE CONTRACTOR TO PERFORM THEIR WORK. REFER TO ARCHITECTURAL DRAWINGS FOR OTHER WALLS, FINISHES AND DIMENSIONS.

SHOP DRAWINGS:
SHOP DRAWINGS FOR:
REINFORCING STEEL, STRUCTURAL STEEL, AND ALUMINIUM SHALL BE SUBMITTED TO THE STRUCTURAL ENGINEER, AND ARCHITECT FOR REVIEW OF DESIGN INTENT, PRIOR TO FABRICATION OF THESE ITEMS. SUBMITTAL SHALL INCLUDE A MAXIMUM OF ONE REPRODUCIBLE SET AND ONE SET OF COPIES (TO BE RETAINED BY ENGINEER) FOR REVIEW. TWO WEEKS SHALL BE ALLOWED FOR REVIEW.

FOUNDATION LOADS:
ALLOWABLE SOIL BEARING PRESSURE: 2000 PSF
ABOVE ARE ASSUMED PER DATA PROVIDED – CONTRACTOR MUST VERIFY SOIL CONDITIONS IN FIELD BEFORE STARTING WORK. THE CONTRACTOR SHALL ALSO READ THE SOILS REPORT BEFORE STARTING WORK AND SHALL BE AWARE OF ALL THE RECOMMENDATIONS LISTED IN THE REPORT.

FOOTINGS:
ALL FOOTINGS MUST REST ON UNDISTURBED ORIGINAL EARTH OR COMPACTED STRUCTURAL FILL AS PER SOIL REPORT RECOMMENDATIONS. FOOTING SIZES SHOWN ON DETAILS ARE MINIMUM DIMENSIONS.

REINFORCED CONCRETE:
CONCRETE SHALL HAVE THE FOLLOWING MINIMUM PROPERTIES:
MINIMUM 28–DAY STRENGTH (f'c):
ALL STRUCTURAL CONCRETE: f'c = 4,000 psi (WSDOT CLASS 4,000 CONCRETE)

CONCRETE PROTECTION:
MINIMUM CONCRETE PROTECTION (COVER) FOR REINFORCING STEEL SHALL BE AS FOLLOWS (U.N.O.):
FOOTINGS AND OTHER UNFORMED SURFACES, EARTH FACE: 3"
FORMED SURFACES IN DIRECT CONTACT WITH EARTH AND ALL OTHER LOCATIONS: 2"

BASEPLATE GROUT:
BASEPLATE GROUT SHALL BE NON–SHRINK, NON–METALLIC, HIGH–STRENGTH GROUT CONFORMING TO ASTM C–1107.

REINFORCING STEEL:
REINFORCING STEEL SHALL CONFORM TO ASTM A615 GRADE 60 AND SHALL BE DETAILED (INCLUDING HOOKS AND BENDS) IN ACCORDANCE WITH ACI 315 AND 318 (LATEST EDITION). LAP ALL CONTINUOUS REINFORCEMENT 40 BAR DIAMETERS OR 2'–0" MINIMUM. PROVIDE CORNER BARS AT ALL WALL INTERSECTIONS. LAP CORNER BARS 40 BAR DIAMETERS OR 2'–0" MIN. PROVIDE (2) #5 MIN. U.N.O. TRIM BARS AROUND ALL OPENINGS IN CONCRETE WALLS OR SLABS EXTENDING 2'–6" PAST CORNERS, TYPICAL. NO BARS PARTIALLY EMBEDDED IN HARDENED CONCRETE SHALL BE FIELD BENT UNLESS SPECIFICALLY SO DETAILED OR APPROVED BY THE STRUCTURAL ENGINEER.

WELDING OF REINFORCING BARS SHALL CONFORM TO ANSI/AWS D1.4. REINFORCEMENT SHALL NOT BE WELDED UNTIL A CHEMICAL ANALYSIS SUFFICIENT TO DETERMINE THE CARBON EQUIVALENT IS PERFORMED. THE CARBON EQUIVALENT OF REINFORCING STEEL BARS SHALL BE CALCULATED FROM THE CHEMICAL COMPOSITION AS SHOWN IN THE MILL TEST REPORT. IF MILL TEST REPORTS ARE NOT AVAILABLE, A CHEMICAL ANALYSIS SHALL BE MADE OF BARS REPRESENTATIVE OF THE BARS TO BE WELDED. THE CARBON EQUIVALENT (C.E.) SHALL NOT EXCEED .55. REINFORCEMENTS MEETING ASTM A706 DEEMED TO MEET THE WELDABILITY REQUIREMENTS MAY BE USED IN LIEU OF TESTING. SPECIAL INSPECTION IS REQUIRED FOR ALL FIELD WELDING.

AT TIME OF CONCRETE PLACEMENT, REINFORCING SHALL BE FREE OF ANY MUD, OIL, GREASE, ETC. THAT MAY DECREASE BOND.

STRUCTURAL STEEL:
HSS COLUMNS SHALL CONFORM TO ASTM A500 GRADE B (Fy=46,000 psi). PIPES SHALL CONFORM TO ASTM A53 GRADE B (Fy=35,000 psi). ALL "W" AND "H" SHAPES SHALL BE ASTM A992, (Fy=50,000 psi). ALUMINIUM COLUMN AND BEAM SHALL BE ASTM B209 6061–T6 (Ftu = 38 KSI, Fty = 35 KSI). ALL OTHER STEEL SHALL CONFORM TO ASTM A36. ALL STAINLESS STEEL TO BE 316L (Fy=30,000 psi). ALL BOLTS TO BE ASTM A325 U.N.O. AND ALL ANCHOR BOLTS ASTM F1554, GRADE 55, U.N.O. ALL ANCHOR BOLTS MUST BE ACCURATELY PLACED IN THEIR FINAL LOCATION PRIOR TO POURING CONCRETE, "WET STICKING" OF ANCHOR BOLTS IS NOT ALLOWED.

APPLY ONE COAT OF APPROVED SHOP PAINT TO ALL STEEL NOT EMBEDDED IN CONCRETE, FABRICATION AND ERECTION SHALL BE IN ACCORDANCE WITH THE LATEST EDITION OF THE AISC SPECIFICATION FOR THE DESIGN, FABRICATION AND ERECTION OF STRUCTURAL STEEL FOR BUILDINGS.

ALL WELDING SHALL MEET AWS/WABO CODES FOR ARC WELDING IN BUILDING CONSTRUCTION. ALL WELDS SHALL BE 3/16" MINIMUM OR PER SECTION J.2b OF AISC (WHICHEVER IS LARGER), U.N.O. WELDING SHALL BE PERFORMED IN ACCORDANCE WITH A WELDING PROCEDURE SPECIFICATION (WPS) AS REQUIRED IN AWS D1.1 AND APPROVED BY THE STRUCTURAL ENGINEER BEFORE WORK BEGINS. THE WPS VARIABLES SHALL BE WITHIN THE PARAMETERS ESTABLISHED BY THE FILLER METAL MANUFACTURER. WELDING ELECTRODES SHALL BE E70TG–K2 OR E70T6 WITH A MINIMUM SPECIFIED CVN OF 20 ft–lbs AT 20 DEGREES FAHRENHEIT AND 40 ft–lbs AT 70 DEGREES FAHRENHEIT ONLY FOR ALL SHOP WELDS AND FIELD WELDS OF LATERAL RESISTING ELEMENTS, E70 ELECTRODES MAY BE USED FOR FIELD WELDS OF OTHER COMPONENTS NOT ASSOCIATED WITH THE LATERAL RESISTING SYSTEM. REMOVE BOTTOM FLANGE WELD TAB AT MOMENT FRAME CONNECTIONS AND REINFORCE WITH 5/16" FILLET WELD IN CONFORMANCE WITH FEMA–353 RECOMMENDATIONS. WELD ACCESS HOLE DETAILING AT MOMENT FRAME CONNECTIONS SHALL CONFORM WITH FEMA–350 AND FEMA–353 RECOMMENDATIONS. ALL WELDING OF STAINLESS STEEL SHALL USE E309 ELECTRODES WITH A GMAC PROCESS. ALL WELDING SHALL BE PERFORMED BY WELDERS WITH AWS/WABO CERTIFICATION WITH THE MATERIAL AND METHOD REQUIRED.

EPOXY EMBEDMENTS:
ALL EPOXY EMBEDDED ITEMS CALLED OUT ON PLAN SHALL BE HILTI HY–200 OR APPROVED EQUAL U.N.O. ALL EMBEDDED ITEMS SHALL BE INSTALLED PER THE EPOXY MANUFACTURER'S RECOMMENDATIONS AND ICBO REPORT #ER–5193.

EXPANSION BOLTS:
ALL EXPANSION BOLTS CALLED OUT ON PLAN SHALL BE HILTI KWIK BOLT–II CONCRETE ANCHORS OR APPROVED EQUAL U.N.O. ALL ANCHORS SHALL BE INSTALLED PER THE MANUFACTURER'S RECOMMENDATIONS AND ICBO REPORT #ER–4627. ALL HOLES MUST BE COMPLETELY CLEANED OUT BEFORE INSTALLING ANCHORS.

SPECIAL INSPECTIONS:
SPECIAL INSPECTIONS SHALL MEET THE REQUIREMENTS OF IBC CHAPTER 17.

INSPECTION NOTES:
–– THE CONSTRUCTION INSPECTIONS LISTED ARE IN ADDITION TO THE CALLED INSPECTIONS REQUIRED BY SECTION 110 OF THE INTERNATIONAL BUILDING CODE. SPECIAL INSPECTION IS NOT A SUBSTITUTE FOR INSPECTION BY A CITY INSPECTOR. SPECIALLY INSPECTED WORK WHICH IS INSTALLED OR COVERED WITHOUT THE APPROVAL OF THE CITY INSPECTOR IS SUBJECT TO REMOVAL OR EXPOSURE.
–– CONTINUOUS INSPECTION IS REQUIRED DURING THE PERFORMANCE OF THE WORK WHERE REQUIRED BY THE BUILDING CODE / LOCAL JURISDICTION / MANUFACTURER'S REQUIREMENTS UNLESS OTHERWISE SPECIFIED.
–– THE SPECIAL INSPECTOR MUST BE CERTIFIED TO PERFORM THE TYPES OF INSPECTION SPECIFIED AND SHALL DEMONSTRATE COMPETENCE TO THE SATISFACTION OF THE BUILDING OFFICIAL.
–– IT IS THE RESPONSIBILITY OF THE CONTRACTOR TO INFORM THE SPECIAL INSPECTOR OR INSPECTION AGENCY AT LEAST ONE WORKING DAY BEFORE PERFORMING ANY WORK THAT REQUIRES SPECIAL INSPECTION. ALL WORK PERFORMED WITHOUT THE REQUIRED SPECIAL INSPECTION IS SUBJECT TO REMOVAL.

SPECIAL INSPECTORS SHALL:
–– BE UNDER THE SUPERVISION OF A WASHINGTON REGISTERED CIVIL ENGINEER.
–– OBSERVE THE WORK ASSIGNED FOR CONFORMANCE WITH APPROVED DRAWINGS AND SPECIFICATIONS.
–– FURNISH INSPECTION REPORTS TO THE BUILDING DEPARTMENT AND ENGINEER. DISCREPANCIES SHALL BE BROUGHT TO THE IMMEDIATE ATTENTION OF THE CONTRACTOR FOR CORRECTION; THEN, IF NOT CORRECTED, TO THE BUILDING DEPARTMENT AND ENGINEER.
–– SUBMIT A FINAL REPORT, SIGNED BY A WASHINGTON REGISTERED CIVIL ENGINEER, STATING THE WORK WAS IN CONFORMANCE WITH THE APPROVED DRAWINGS AND SPECIFICATIONS AND THE APPLICABLE WORKMANSHIP PROVISIONS OF IBC.

FIXINGS:
ALL FIXINGS, HEXSERTS, STUDS, SCREWS, NUTS AND FIXING HARDWARE TO BE STAINLESS STEEL

CALL BEFORE YOU DIG 1–800–424–5555

NO.	REVISION COMMENTS	BY	REVIEW	DATE

DESIGNER | DRAWN BY | CHECKED BY

1st Submittal, 3/22/2022

ROBERT P. DOHERTY — STATE OF WASHINGTON — 43425 — REGISTERED PROFESSIONAL ENGINEER

11/5/21

1ST SUBMITTAL – 100% SUBMITTAL

communitytransit

Swift ORANGE LINE

STATION SHELTER & AMENITIES

GENERAL NOTES

TITLE

Otak
11241 Willows Road NE, Suite 200
Redmond, WA 98052
425.822.4446
www.otak.com

32880.H
PROJECT NUMBER

S1.3
DRAWING NO.

SHEET 477 OF 622

© 2021 OTAK, INC.

Plotted: Nov 05, 2021 – 7:57pm K:\Project\32800\32880H\CADD\ACAD\Dwg\S1.3.dwg Layout Name: S1.3

PDR-009731-2021

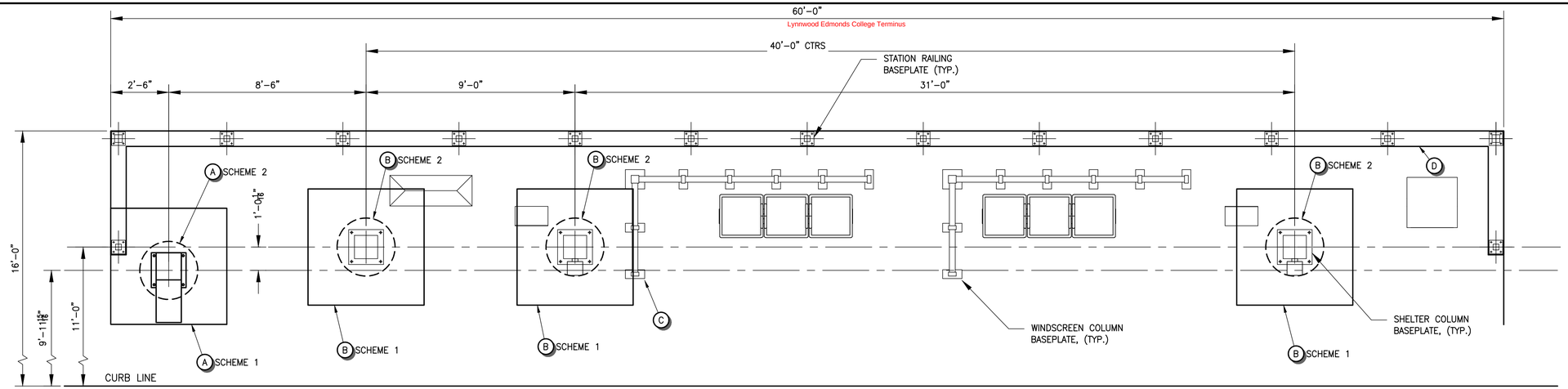

FOUNDATION PLAN

SCALE: 1" = 3'-0"

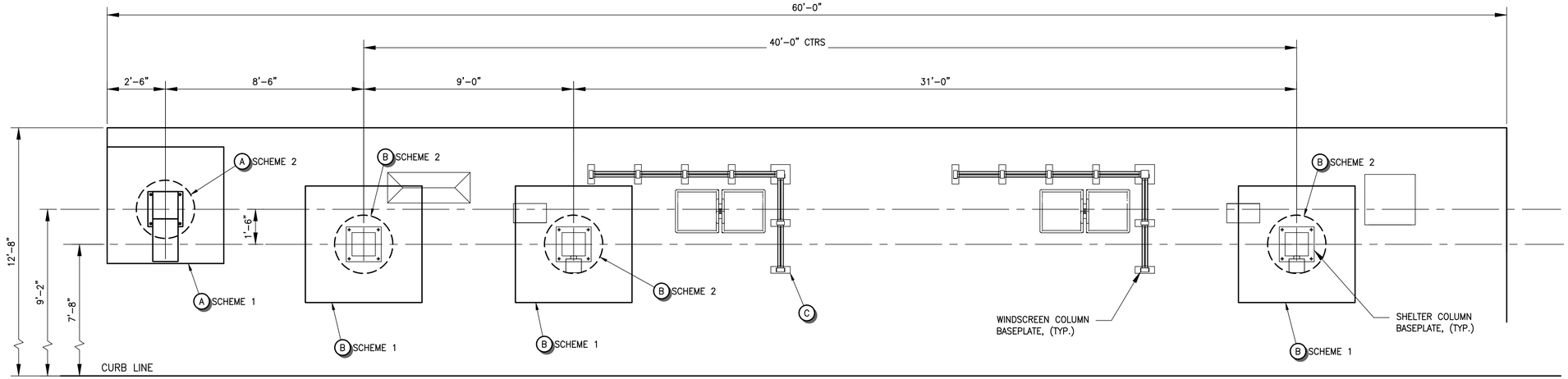

MODIFIED PLATFORM FOUNDATION PLAN

SCALE: 1" = 3'-0"

FOUNDATION AND WALL SPECIAL INSPECTIONS

VERIFICATION AND INSPECTION	CONTINUOUS	PERIODIC	REFERENCED STANDARD	IBC REFERENCE
TABLE 1705.3 REQUIRED SPECIAL INSPECTIONS AND TESTS OF CONCRETE CONSTRUCTION				
1. INSPECT REINFORCEMENT AND VERIFY PLACEMENT	–	X	ACI 318 CH20, 25.2, 25.3, 26.6.1–26.6.3	1908.4
5. VERIFY USE OF REQUIRED MIX DESIGN	–	X	ACI 318: CH. 19, 26.4.3, 26.4.4	1904.1, 1904.2, 1908.2, 1908.3
6. PRIOR TO CONCRETE PLACEMENT, FABRICATE SPECIMENS FOR STRENGTH TESTS, PERFORM SLUMP AND AIR CONTENT TESTS, AND DETERMINE THE TEMPERATURE OF THE CONCRETE	X	–	ASTM C 172, ASTM C31, ACI 318: 26.4, 26.12	1908.10
7. INSPECT CONCRETE AND SHOTCRETE PLACEMENT FOR PROPER APPLICATION TECHNIQUES	X	–	ACI 318: 26.5	1908.6, 1908.7, 1908.8
8. VERIFY MAINTENANCE OF SPECIFIED CURING TEMPERATURE AND TECHNIQUES	–	X	ACI 318: 26.5.3 – 26.5.5	1908.9
12. INSPECT FORMWORK FOR SHAPE, LOCATION, AND DIMENSIONS OF THE CONCRETE MEMBER BEING FORMED.	–	–	ACI 318: 26.11.1.2(B)	–
TABLE 1705.6 REQUIRED SPECIAL INSPECTIONS AND TESTS OF SOILS				
1. CONFIRMATION OF BEARING CAPACITY OF SOILS PRIOR TO PLACING CONCRETE	–	X	–	–
2. VERIFY EXCAVATIONS ARE EXTENDED TO PROPER DEPTH AND HAVE REACHED PROPER MATERIAL	–	X	–	–
3. PERFORM CLASSIFICATION AND TESTING OF COMPACTED FILL MATERIALS	–	X	–	–
4. VERIFY USE OF PROPER MATERIALS, DENSITIES AND LIFT THICKNESSES DURING PLACEMENT AND COMPACTION OF COMPACTED FILL.	X	–	–	–
5. PRIOR TO PLACEMENT OF COMPACTED FILL, INSPECT SUBGRADE AND VERIFY THAT SITE HAS BEEN PROPERLY PREPARED.	–	X	–	–

FOUNDATION AND WALL STRUCTURAL NOTES

1. THESE FOUNDATION STRUCTURAL NOTES SHALL APPLY TO SHEETS S2.1 – S2.7.
2. FOUNDATIONS HAVE BEEN DESIGNED IN ACCORDANCE WITH THE 2015 INTERNATIONAL BUILDING CODE.
3. FLOOR LIVE LOAD (L) = 60 PSF MIN.
4. DESIGN SNOW LOAD (S) = 25 PSF
5. WIND DESIGN DATA:
   - 5.1. BASIC WIND SPEED (3 SECOND GUST) = 110 MPH
   - 5.2. RISK CATEGORY I
   - 5.3. EXPOSURE CATEGORY = C
6. SEISMIC DESIGN DATA:
   - 6.1. RISK CATEGORY I
   - 6.2. SEISMIC IMPORTANCE FACTOR = 1
   - 6.3. S_S = 1.408g, S_1 = 0.547g
   - 6.4. SITE CLASS D
   - 6.5. SEISMIC DESIGN CATEGORY D
   - 6.6. CANTILEVER COLUMN SYSTEM
   - 6.7. BASE SHEAR = 6.10 KIPS
   - 6.8. SEISMIC RESPONSE COEFFICIENT, C_S = 0.751
   - 6.9. RESPONSE MODIFICATION FACTOR, R = 1.25
   - 6.10. LOAD AND RESISTANCE FACTOR DESIGN (LRFD) ANALYSIS PROCEDURE USED
7. NOMINAL BEARING RESISTANCE = 7.5 KSF (2.5 KSF ALLOWABLE). REFER TO THE GEOTECHNICAL REPORT BY GEO ENGINEERS, DATED 9/13/2021, FOR GEOTECHNICAL DESIGN INFORMATION.
8. SPECIAL INSPECTIONS: THE CONTRACTING AGENCY OR AGENCY'S REPRESENTATIVE SHALL BE ON–SITE TO CONDUCT THE INSPECTIONS SHOWN ON THIS SHEET, AT A MINIMUM. THE CONTRACTOR SHALL NOTIFY THE CONTRACTING AGENCY SUFFICIENTLY AHEAD OF TIME IN ORDER FOR PERSONNEL TO BE ON SITE PRIOR TO THE WORK.
9. CLEAR COVER TO REINFORCING STEEL SHALL BE AS FOLLOWS:
   - 9.1. FOR MATS OF REINFORCEMENT NEAREST FACE OF CONCRETE THAT IS CAST AGAINST EARTH = 3 INCHES
   - 9.2. 2 INCHES AT ALL OTHER LOCATIONS.
10. NO LAP SPLICES OF REINFORCING STEEL ALLOWED IN SPREAD FOOTINGS. MINIMUM LAP SPLICE FOR W4XW4 6X6 WELDED WIRE FABRIC IN THE REINFORCED SLAB ON GRADE SHALL BE 12 INCHES.

FOUNDATION NOTES

- (A) ICONIC MARKER FOUNDATION, SEE SHEET S2.3.
- (B) SHELTER COLUMN FOUNDATION, SEE SHEET S2.3.
- (C) WINDSCREEN SPREAD FOOTINGS, SEE SHEET S2.3.
- (D) STATION RAILING STRIP FOOTING, STATION PLATFORM – VERTICAL CURB DETAIL ON SHEET C3.400.
- (E) CONCRETE 28 DAY COMPRESSIVE STRENGTH SHALL BE 4000 PSI MIN.
- (F) ALL REINFORCEMENT STEEL SHALL BE GRADE 60.

CALL BEFORE YOU DIG 1–800–424–5555

NO.	REVISION COMMENTS	BY	REVIEW	DATE

DESIGNER | DRAWN BY | CHECKED BY

ROBERT P. DOHERTY
STATE OF WASHINGTON
43425
REGISTERED PROFESSIONAL ENGINEER

11/5/21

100% Submittal, 3/22/2022

community transit
Swift ORANGE LINE – 100% SUBMITTAL
STATION SHELTER & AMENITIES
STATION FOUNDATION PLAN & DETAILS

TITLE

Otak
11241 Willows Road NE, Suite 200
Redmond, WA 98052
425.822.4446
www.otak.com

32880.H
PROJECT NUMBER

S2.1
DRAWING NO.

SHEET 478 OF 622

© 2021 OTAK, INC.

Plotted: Nov 05, 2021 – 7:58pm K:\Project\32800\32880H\CADD\ACAD\Dwg\S2.1-S2.2.dwg Layout Name: S2.1

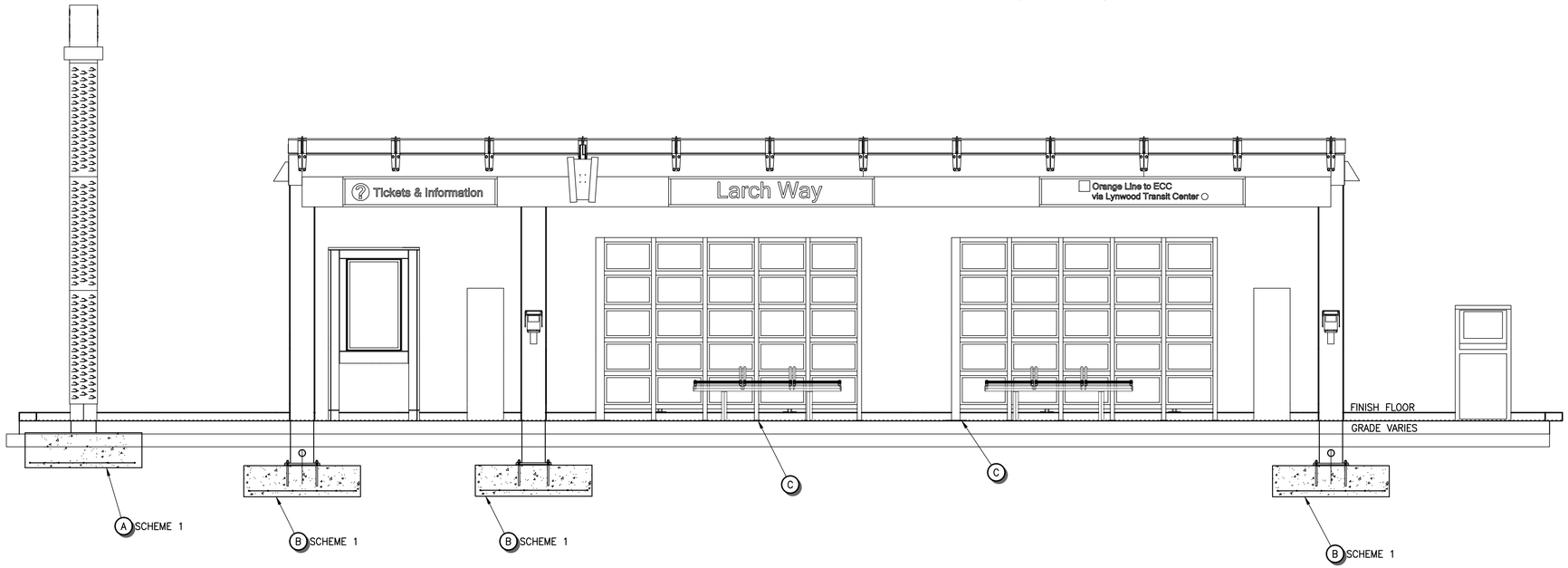

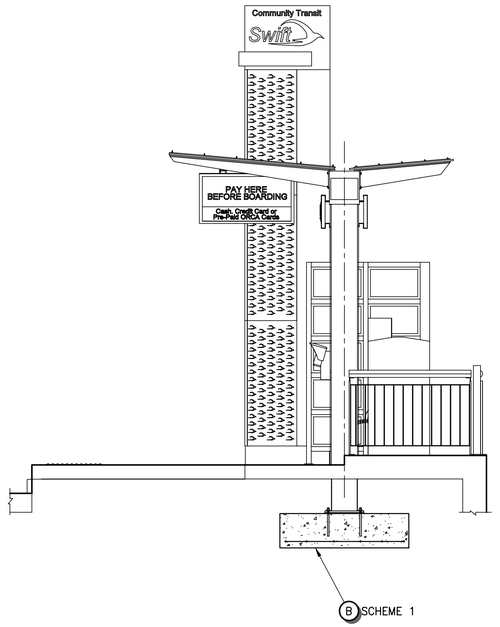

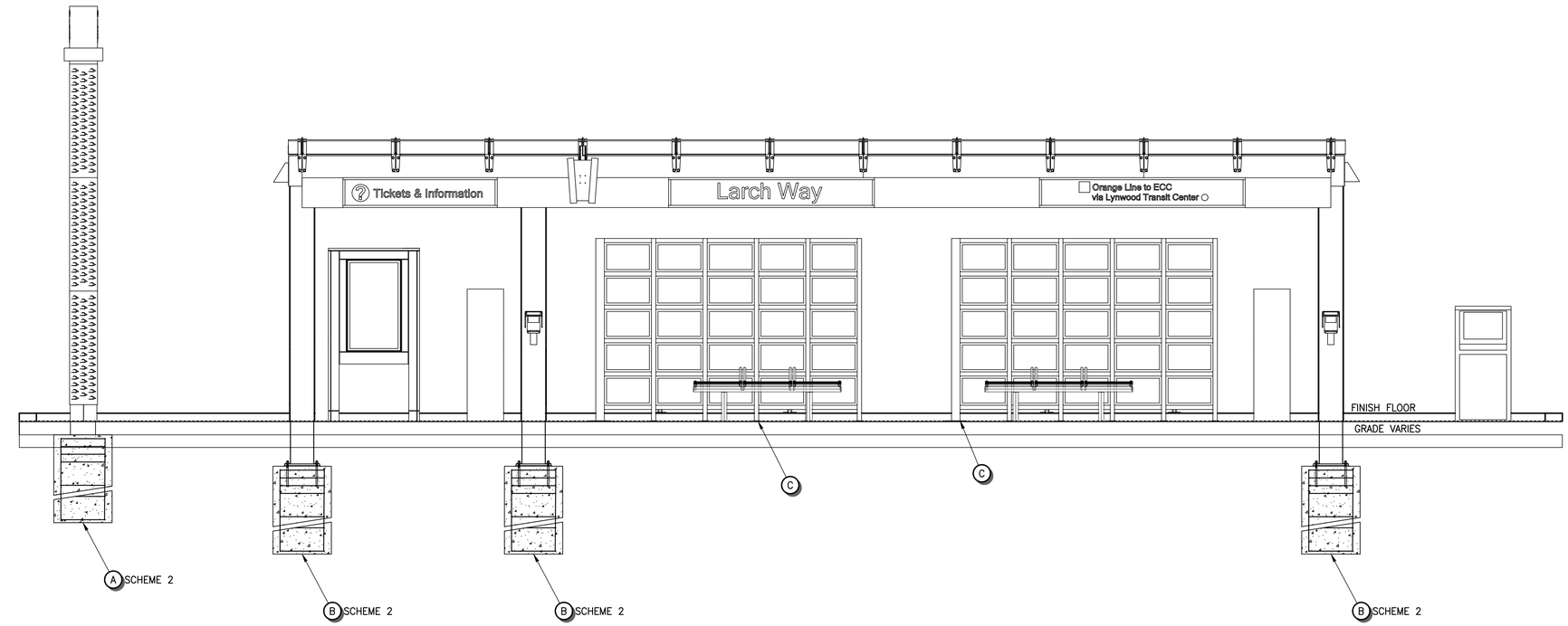

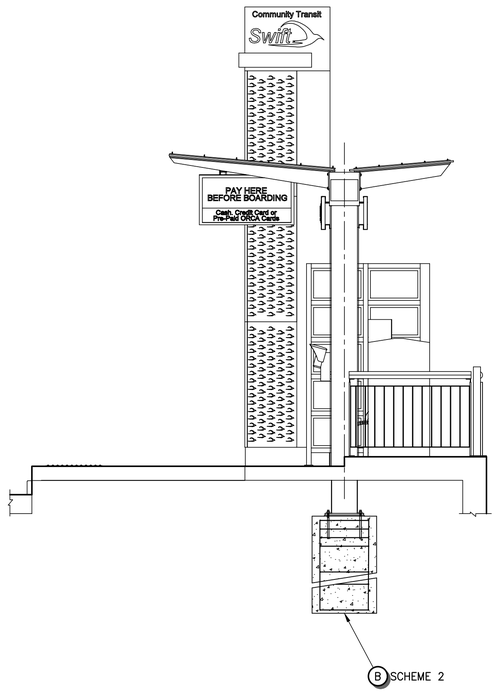

FOUNDATION NOTES

- (A) ICONIC MARKER FOUNDATION, SEE SHEET S2.3.
- (B) SHELTER COLUMN FOUNDATION, SEE SHEET S2.3.
- (C) WINDSCREEN SPREAD FOOTINGS, SEE SHEET S2.3.
- (D) STATION RAILING STRIP FOOTING, STATION PLATFORM – VERTICAL CURB DETAIL ON SHEET C3.400.
- (E) CONCRETE 28 DAY COMPRESSIVE STRENGTH SHALL BE 4000 PSI MIN.
- (F) ALL REINFORCEMENT STEEL SHALL BE GRADE 60.

FRONT ELEVATION

SCALE: 1" = 3'-0"

SIDE ELEVATION

SCALE: 1" = 3'-0"

CALL BEFORE YOU DIG 1-800-424-5555

Plotted: Nov 05, 2021 - 8:00pm K:\Project\32800\32880H\CADD\ACAD\Dwg\S2.1-S2.2.dwg Layout Name: S2.2

NO.	REVISION COMMENTS	BY	REVIEW	DATE

DESIGNER

DRAWN BY

CHECKED BY

11/5/21

ROBERT P. DOHERTY
STATE OF WASHINGTON
43425
REGISTERED
PROFESSIONAL ENGINEER

communitytransit
Swift ORANGE LINE – 100% SUBMITTAL
STATION SHELTER & AMENITIES
STATION FOUNDATION PLAN & DETAILS

TITLE

Otak
11241 Willows Road NE, Suite 200
Redmond, WA 98052
425.822.4446
www.otak.com

32880.H
PROJECT NUMBER

S2.2
DRAWING NO.

SHEET 479 OF 622

© 2021 OTAK, INC.

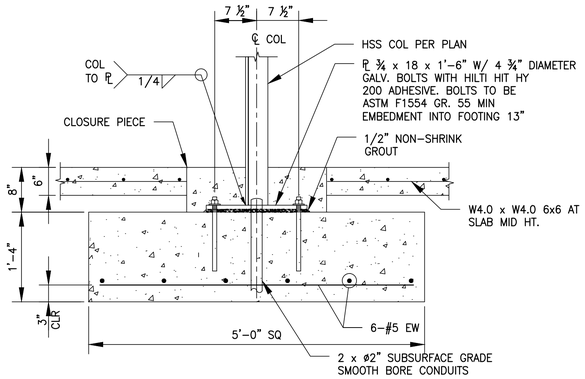

A ICONIC MARKER FOOTING - SCHEME 1

1" = 1'-0"

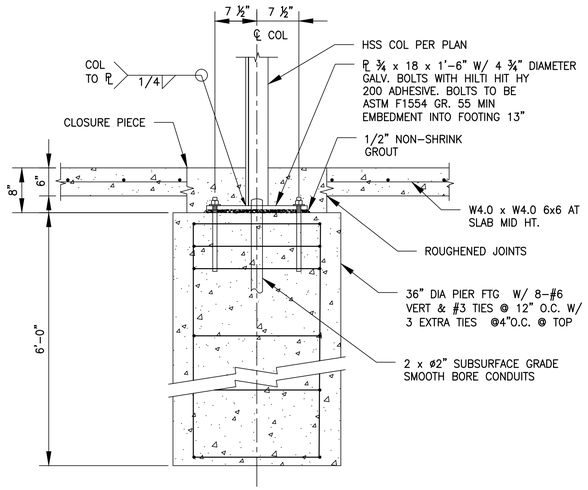

A ICONIC MARKER FOOTING - SCHEME 2

1" = 1'-0"

NOTES:
THIS SCHEME MUST ALSO INCLUDE THE 2 CONDUITS AS SHOWN BELOW

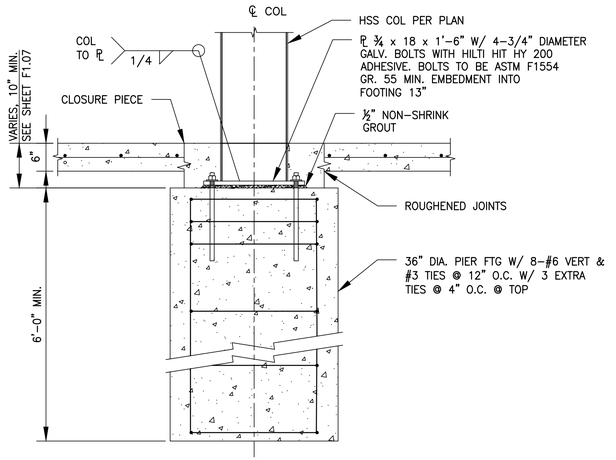

B SHELTER COLUMN FOOTING - SCHEME 2

1" = 1'-0"

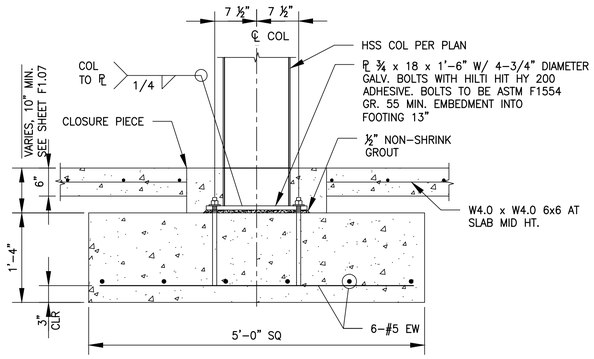

B SHELTER COLUMN FOOTING - SCHEME 1A

1" = 1'-0"

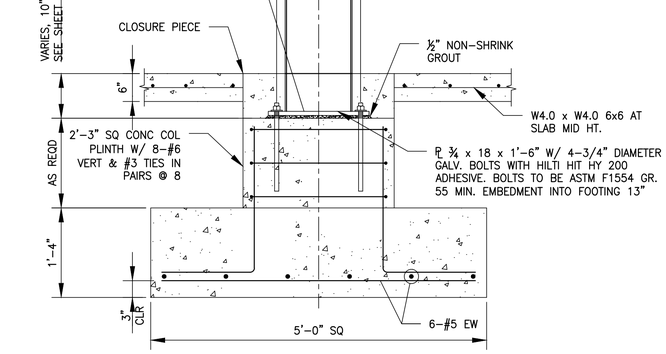

B SHELTER COLUMN FOOTING - SCHEME 1B

1" = 1'-0"

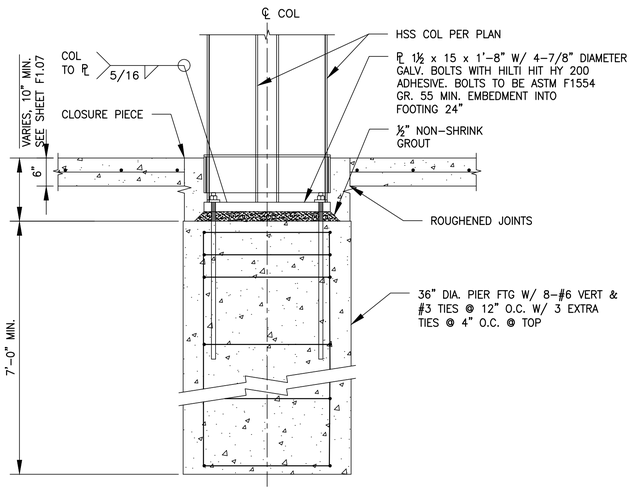

B LYNNWOOD TRANSIT CENTER COLUMN FOOTING - SCHEME 2

1" = 1'-0"

FOUNDATION NOTES

1. CONCRETE 28 DAY COMPRESSIVE STRENGTH SHALL BE 4000 PSI MIN.
2. ALL REINFORCEMENT STEEL SHALL BE GRADE 60.

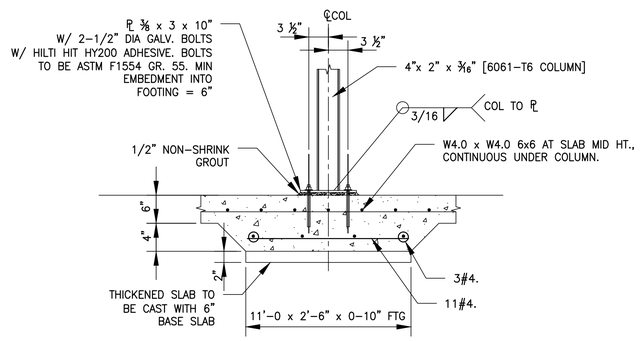

C WINDSCREEN FOOTING AND CONNECTION

1" = 1'-0"

CALL BEFORE YOU DIG 1-800-424-5555

DESIGNER | DRAWN BY | CHECKED BY

NO.	REVISION COMMENTS	BY	REVIEW	DATE

Robert P. Dorrity, State of Washington, 43425, Registered Professional Engineer

11/5/21

community transit
Swift ORANGE LINE - 100% SUBMITTAL
STATION SHELTER & AMENITIES
STATION FOUNDATION PLAN & DETAILS

TITLE

Otak
11241 Willows Road NE, Suite 200
Redmond, WA 98052
425.822.4446
www.otak.com

32880.H
PROJECT NUMBER

S2.3
DRAWING NO.

SHEET 480 OF 622

© 2021 OTAK, INC.

STATION LOCATION	DIRECTION	STATION ID	TOP OF COLUMN FOOTING EL	COLUMN FOOTING TYPE	TOP OF ICONIC MARKER FOOTING EL	ICONIC MARKER FOOTING TYPE
Western Terminus – Edmonds College	EB & WB	3221/3222	441.56	SCHEME 1	442.59	SCHEME 1
SR 524/196th St SW at SR 99	EB	3225	393.17	SCHEME 1	393.28	SCHEME 1
SR 524/196th St SW at SR 99	WB	3246	389.74	SCHEME 2	391.11	SCHEME 2
SR 99 at SR 524/196th St SW	NB	Blue Line #3247	392.53	SCHEME 1	392.92	SCHEME 1
Lynnwood Transit Center	EB	3228	355.65	SCHEME 2	356.01	SCHEME 1
Lynnwood Transit Center	WB	3244	N/A	N/A	358.29	SCHEME 1
33rd Ave W at 188th St SW	EB/NB	3229	401.16	SCHEME 2	402.27	SCHEME 2
33rd Ave W at 188th St SW	WB/SB	3243	400.86	SCHEME 2	401.31	SCHEME 2
36th Ave W at Maple Rd	EB/NB	3230	479.60	SCHEME 2	480.25	SCHEME 2
36th Ave W at Maple Rd	WB/SB	3242	487.49	SCHEME 1	488.89	SCHEME 1
164th St SW at Swamp Creek P&R	EB	3232	525.06	SCHEME 1	524.65	SCHEME 1
164th St SW at Swamp Creek P&R	WB	3240	538.42	SCHEME 2	541.37	SCHEME 1
Ash Way P&R	EB & WB	3233/3239	476.59	SCHEME 1	478.20	SCHEME 1
164th St SW at Larch Way	EB	3238	482.05	SCHEME 1	481.48	SCHEME 1
164th St SW at Larch Way	WB	3234	499.72	SCHEME 2	503.91	SCHEME 2
164th St SW at North Rd	EB	3237	475.17	SCHEME 1	475.28	SCHEME 1
164th St SW at North Rd	WB	3235	473.18	SCHEME 1	473.20	SCHEME 1
164th St SE at 9th Ave SE/Mill Creek Blvd	WB	3236	270.69	SCHEME 1	270.55	SCHEME 1
Eastern Terminus – McCollum Park P&R	EB & WB	3223/3224	403.72	SCHEME 1	404.57	SCHEME 1

STATION SHELTER FOOTING ELEVATIONS TABLE

CALL BEFORE YOU DIG 1–800–424–5555

Plotted: Nov 05, 2021 – 8:04pm K:\Project\32800\32880H\CADD\ACAD\Dwg\S2.3–S2.4.dwg Layout Name: S2.4

DESIGNER | DRAWN BY | CHECKED BY

NO.	REVISION COMMENTS	BY	REVIEW	DATE
1	100% Submittal,			3/22/2022

ROBERT P. DOHERTY — STATE OF WASHINGTON — 43425 — REGISTERED PROFESSIONAL ENGINEER

11/5/21

Swift ORANGE LINE – 100% SUBMITTAL

STATION SHELTER & AMENITIES
STATION FOUNDATION PLAN & DETAILS

TITLE

Otak
11241 Willows Road NE, Suite 200
Redmond, WA 98052
425.822.4446
www.otak.com

32880.H
PROJECT NUMBER

S2.4
DRAWING NO.

SHEET 481 OF 622

© 2021 OTAK, INC.

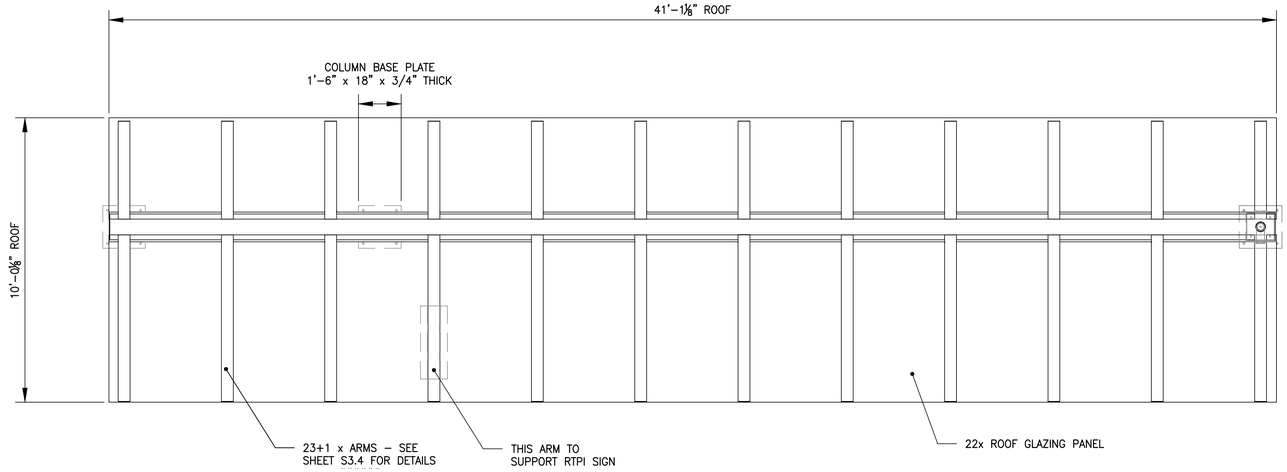

PLAN VIEW

SCALE: 3/8" = 1'-0"

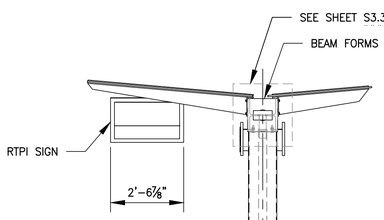

END ELEVATION

SCALE: 3/8" = 1'-0"

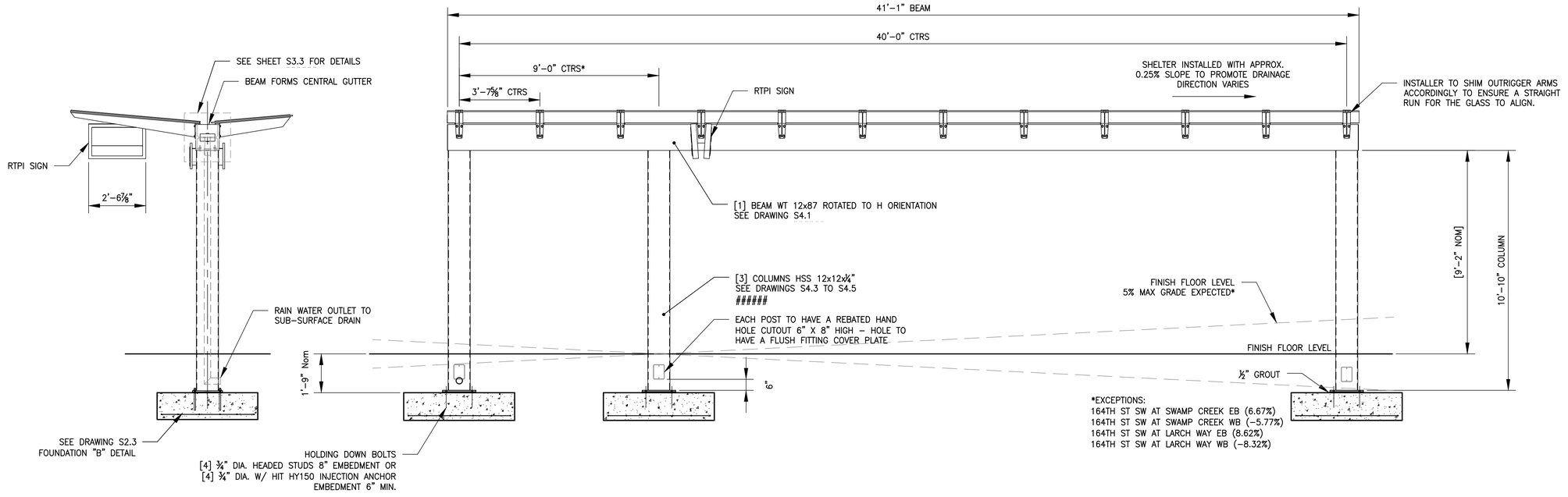

FRONT ELEVATION STRUCTURE ONLY

SCALE: 3/8" = 1'-0"
[CLADDING NOT SHOWN]

CALL BEFORE YOU DIG 1-800-424-5555

NO.	REVISION COMMENTS	BY	REVIEW	DATE

DESIGNER | DRAWN BY | CHECKED BY

ROBERT P. DOHERTY, STATE OF WASHINGTON, 43425, REGISTERED PROFESSIONAL ENGINEER
11/5/21

communitytransit
Swift ORANGE LINE – 100% SUBMITTAL
STATION SHELTER & AMENITIES INSTALLATION
STRUCTURAL OUTLINE GENERAL ASSEMBLY

TITLE

Otak
11241 Willows Road NE, Suite 200
Redmond, WA 98052
425.822.4446
www.otak.com

32880.H
PROJECT NUMBER

S3.1
DRAWING NO.

SHEET 488 OF 622

© 2021 OTAK, INC.

Plotted: Nov 05, 2021 – 8:10pm K:\Project\32800\32880H\CADD\ACAD\Dwg\S3.1-S3.4.dwg Layout Name: S3.1

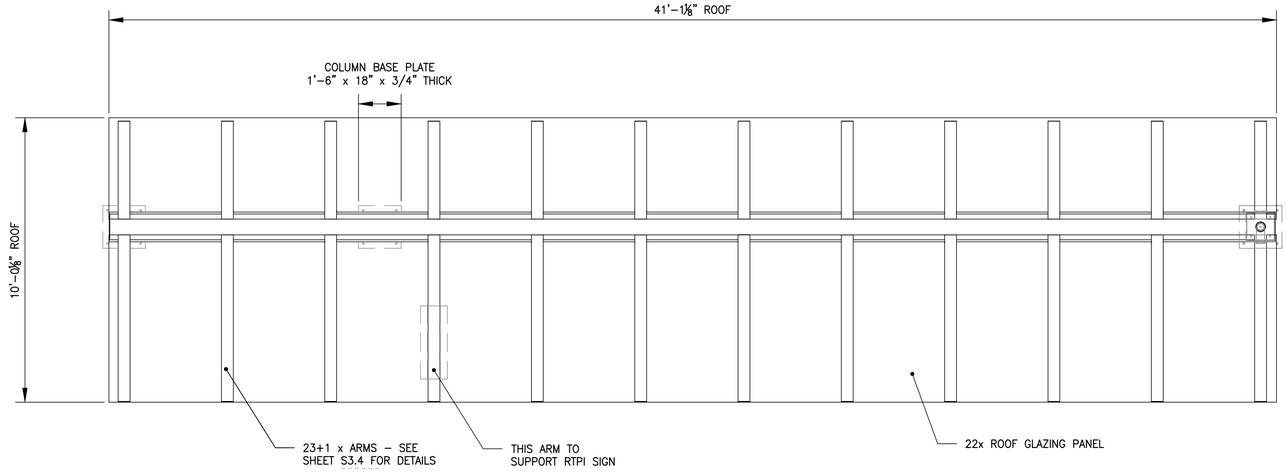

PLAN VIEW

SCALE: 3/8" = 1'-0"

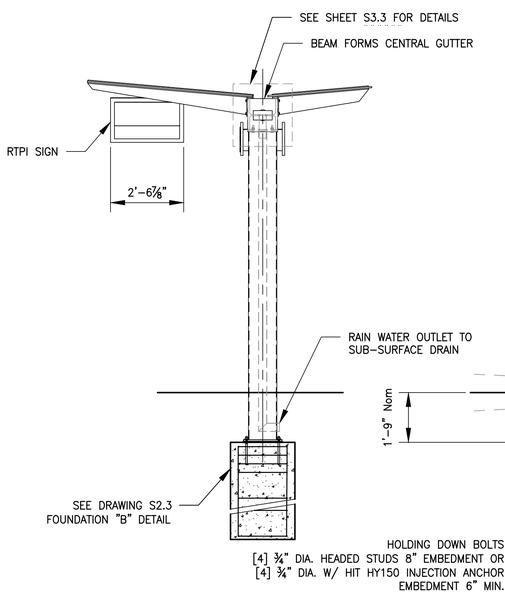

END ELEVATION

SCALE: 3/8" = 1'-0"

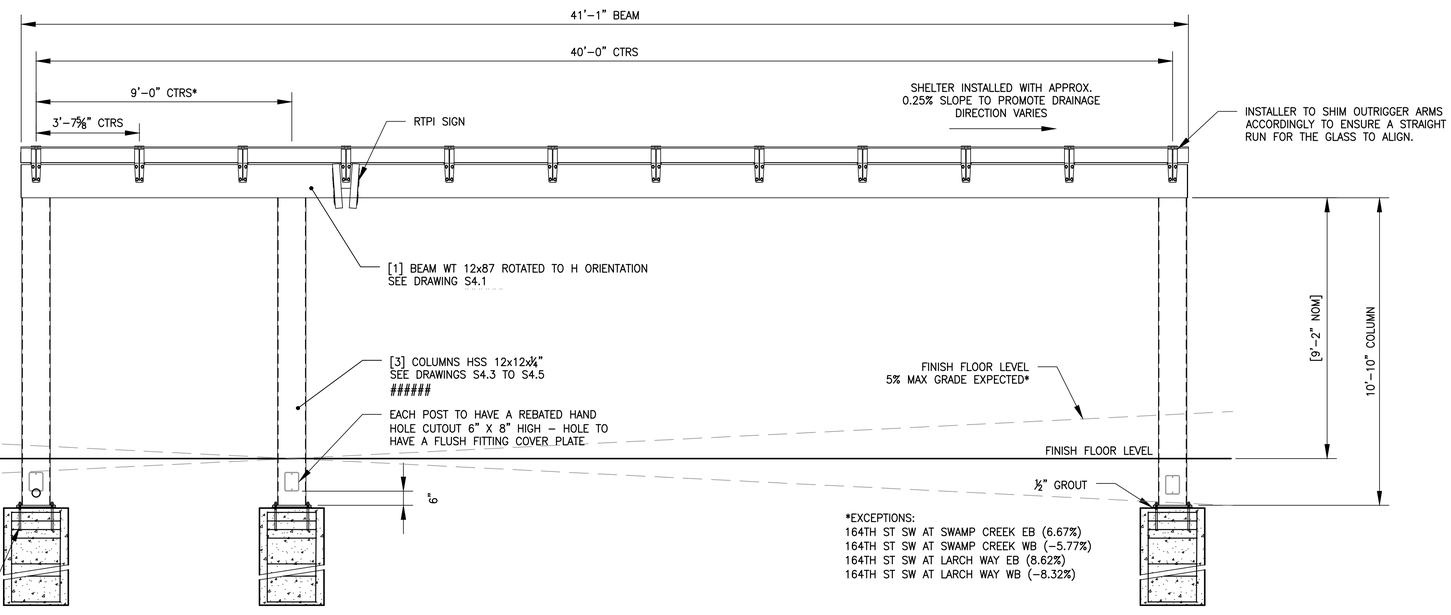

FRONT ELEVATION STRUCTURE ONLY

SCALE: 3/8" = 1'-0"
[CLADDING NOT SHOWN]

CALL BEFORE YOU DIG 1-800-424-5555

NO.	REVISION COMMENTS	BY	REVIEW	DATE

DESIGNER | DRAWN BY | CHECKED BY

ROBERT P. DOHERTY, STATE OF WASHINGTON, 43425, REGISTERED PROFESSIONAL ENGINEER
11/5/21

communitytransit
Swift ORANGE LINE – 100% SUBMITTAL
STATION SHELTER & AMENITIES INSTALLATION
STRUCTURAL OUTLINE GENERAL ASSEMBLY

TITLE

Otak
11241 Willows Road NE, Suite 200
Redmond, WA 98052
425.822.4446
www.otak.com

32880.H
PROJECT NUMBER

S3.2
DRAWING NO.

SHEET 489 OF 622

© 2021 OTAK, INC.

Plotted: Nov 05, 2021 – 8:11pm K:\Project\32800\32880H\CADD\ACAD\Dwg\S3.1-S3.4.dwg Layout Name: S3.2

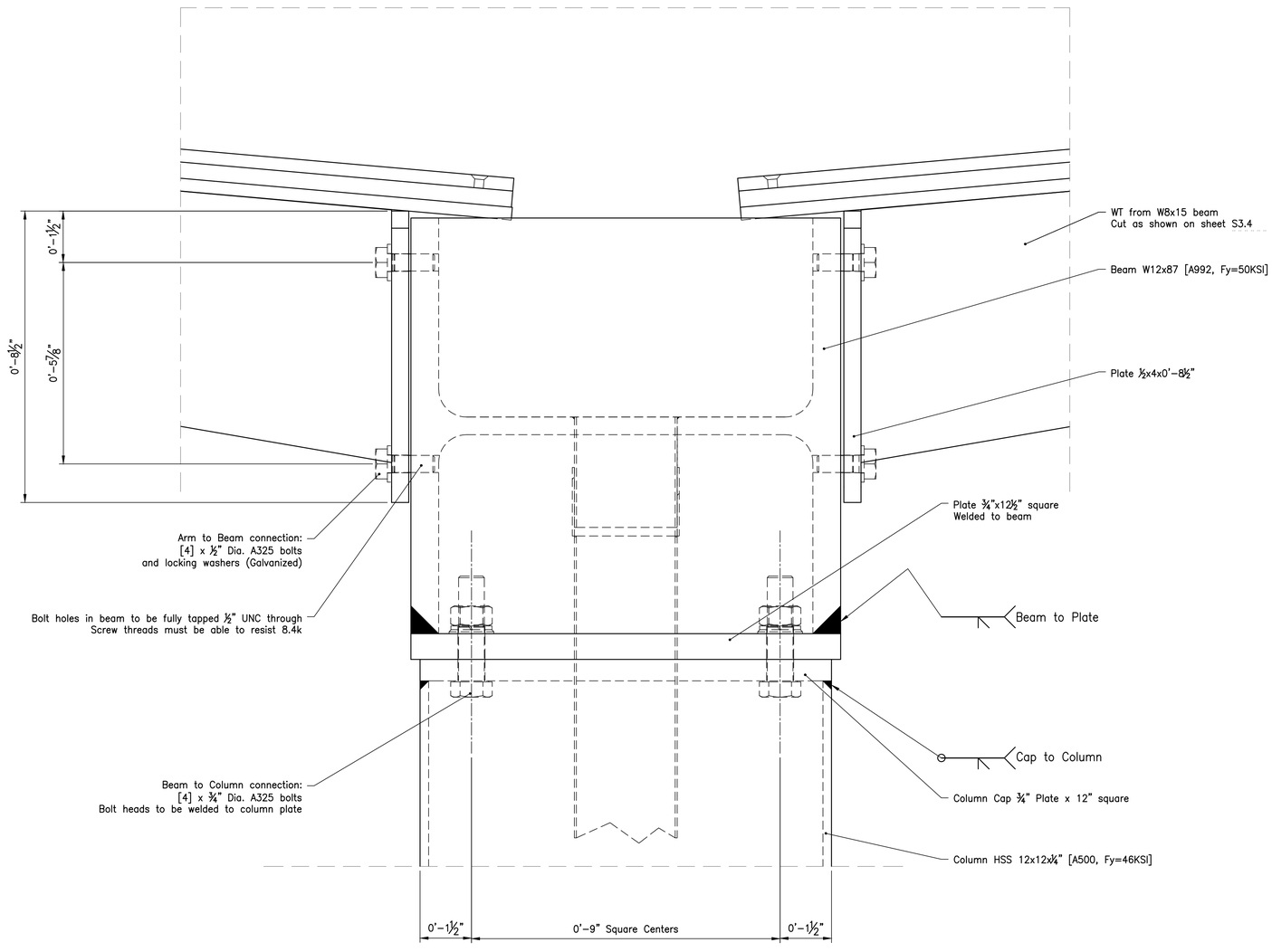

CONNECTION DETAILS
BEAM TO COLUMN
ARM TO BEAM

SCALE: 1" = 2"

NOTES

1. REMOVE ALL BURRS AND SHARP EDGES UNLESS OTHERWISE STATED
2. TOLERANCES UNLESS STATES TO BE ± 1/64"

CALL BEFORE YOU DIG 1-800-424-5555

NO.	REVISION COMMENTS	BY	REVIEW	DATE

DESIGNER | DRAWN BY | CHECKED BY

ROBERT P. DOHERTY
STATE OF WASHINGTON
43425
REGISTERED PROFESSIONAL ENGINEER
11/5/21

communitytransit
Swift ORANGE LINE - 100% SUBMITTAL
STATION SHELTER & AMENITIES INSTALLATION
STRUCTURAL OUTLINE GENERAL ASSEMBLY

TITLE

Otak
11241 Willows Road NE, Suite 200
Redmond, WA 98052
425.822.4446
www.otak.com

32880.H
PROJECT NUMBER

S3.3
DRAWING NO.

SHEET 490 OF 622

© 2021 OTAK, INC.

Plotted: Nov 05, 2021 - 8:11pm K:\Project\32800\32880H\CADD\ACAD\Dwg\S3.1-S3.4.dwg Layout Name: S3.3

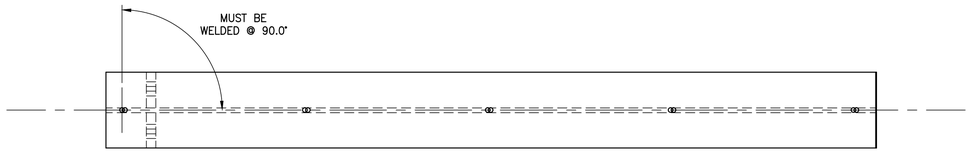

PLAN VIEW

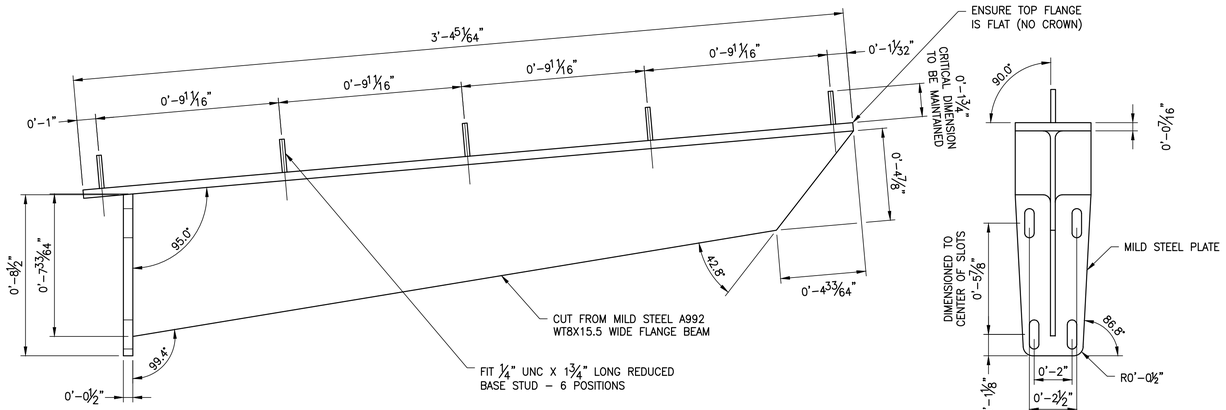

ELEVATION VIEW

SIDE VIEW

SHORT OUTRIGGER DETAILS

SCALE: 1" = 4"

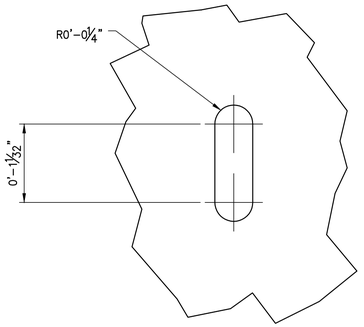

SLOTTED HOLE DETAIL

SCALE: 1" = 1"



PLAN VIEW

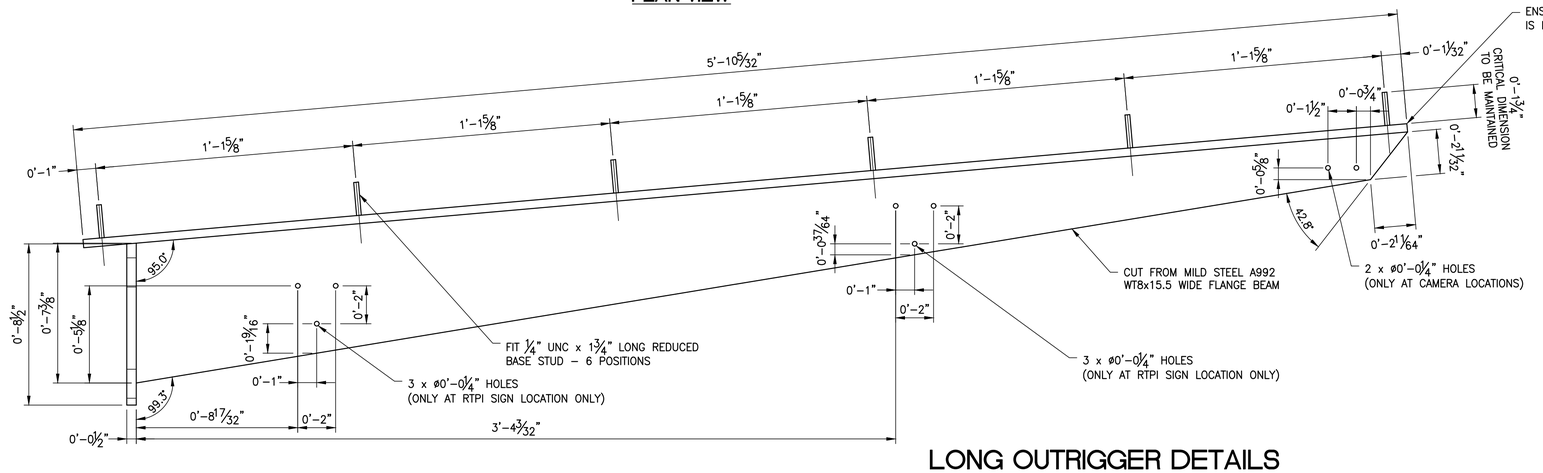

ELEVATION VIEW

SIDE VIEW

LONG OUTRIGGER DETAILS

SCALE: 1" = 4"

CALL BEFORE YOU DIG 1-800-424-5555

NO.	REVISION COMMENTS	BY	REVIEW	DATE

DESIGNER | DRAWN BY | CHECKED BY

ROBERT P. DOHERTY
STATE OF WASHINGTON
43425
REGISTERED
PROFESSIONAL ENGINEER
11/5/21

communitytransit
Swift ORANGE LINE – 100% SUBMITTAL
STATION SHELTER & AMENITIES INSTALLATION
STRUCTURAL OUTLINE GENERAL ASSEMBLY

TITLE

Otak

11241 Willows Road NE, Suite 200
Redmond, WA 98052
425.822.4446
www.otak.com

32880.H
PROJECT NUMBER

S3.4

DRAWING NO.

SHEET 491 OF 622

© 2021 OTAK, INC.

Plotted: Nov 05, 2021 – 8:11pm K:\Project\32800\32880H\CADD\ACAD\Dwg\S3.1-S3.4.dwg Layout Name: S3.4

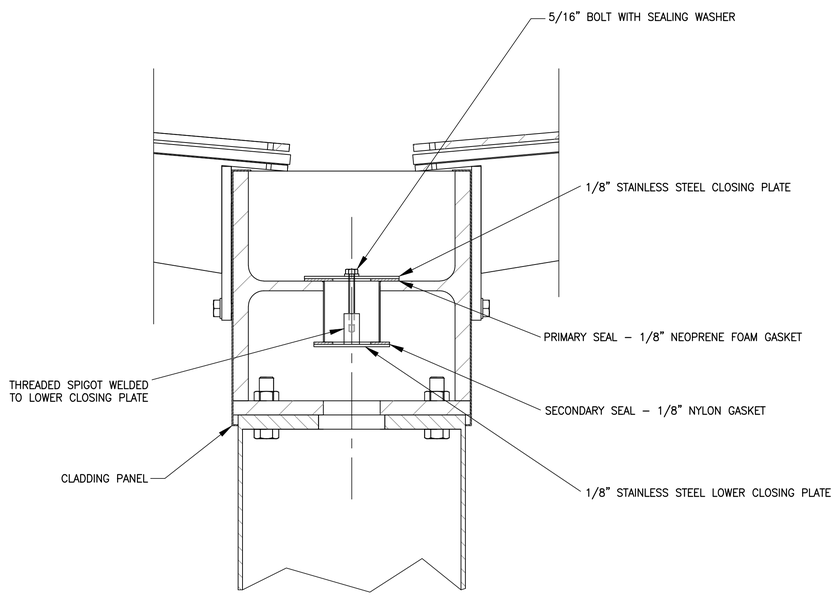

SECTION THROUGH SHELTER COLUMN WITHOUT RAINWATER DOWNPIPE SHOWING CLOSING PLATES AND GASKET SEALS

SCALE: 1" = 4"

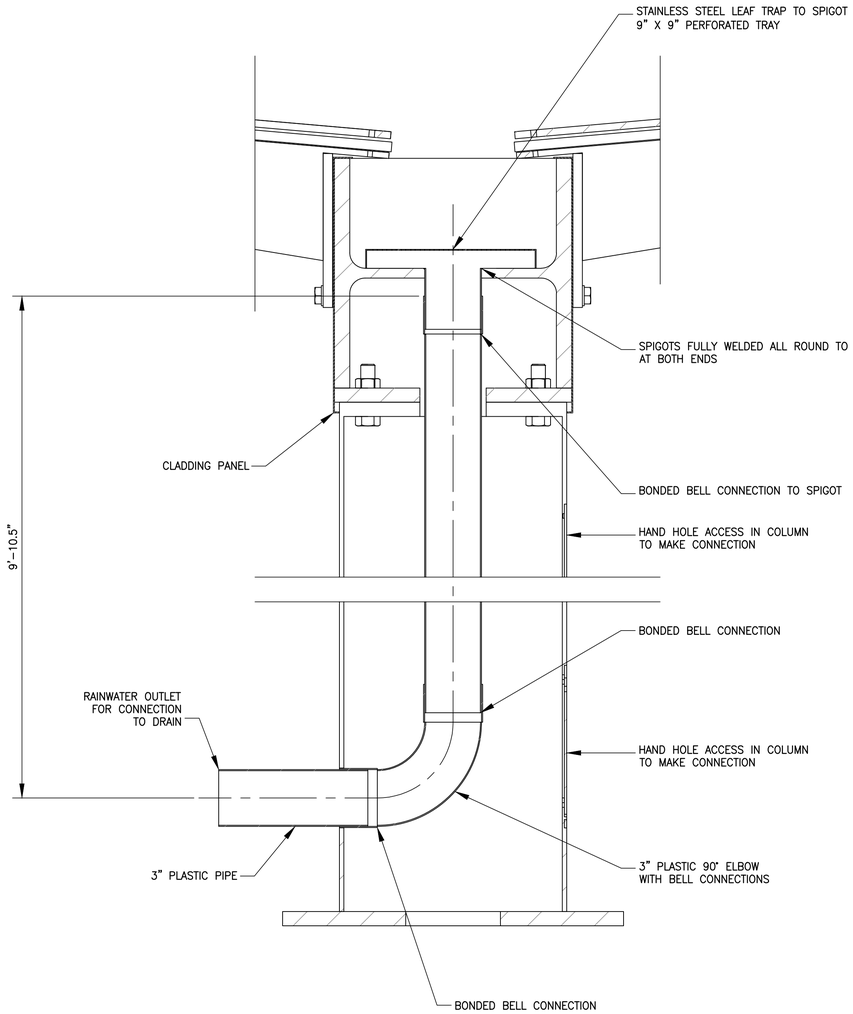

SECTION THROUGH SHELTER COLUMN WITH RAINWATER DOWNPIPE

SCALE: 1" = 4"

CALL BEFORE YOU DIG 1-800-424-5555

NO.	REVISION COMMENTS	BY	REVIEW	DATE

DESIGNER | DRAWN BY | CHECKED BY

ROBERT P. DOHERTY, STATE OF WASHINGTON, 43425, REGISTERED PROFESSIONAL ENGINEER

11/5/21

communitytransit Swift ORANGE LINE – 100% SUBMITTAL
STATION SHELTER & AMENITIES INSTALLATION
RAINWATER DOWNPIPE CONNECTIONS

TITLE

Otak

11241 Willows Road NE, Suite 200
Redmond, WA 98052
425.822.4446
www.otak.com

32880.H
PROJECT NUMBER

S3.5

DRAWING NO.

SHEET 492 OF 622

© 2021 OTAK, INC.

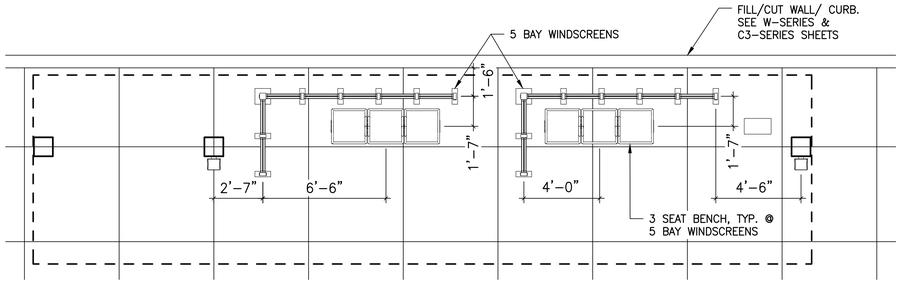

WINDSCREEN CONFIGURATION 1 TYP.

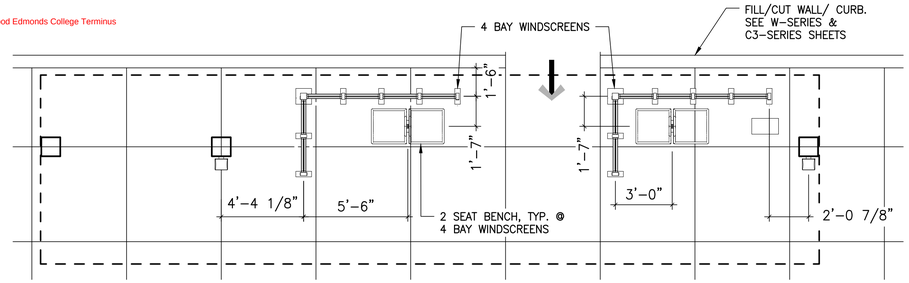

WINDSCREEN CONFIGURATION 4, REAR ENTRY

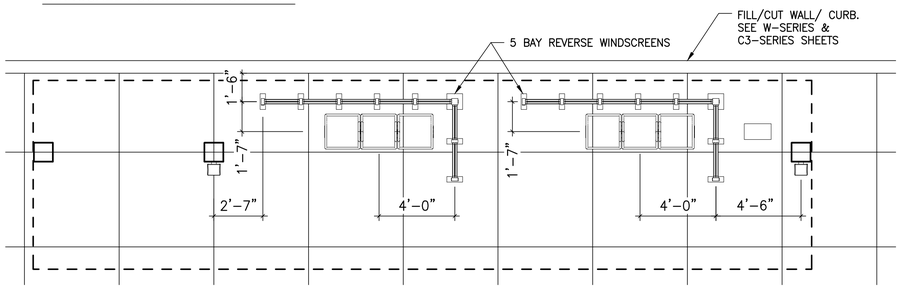

WINDSCREEN CONFIGURATION 2

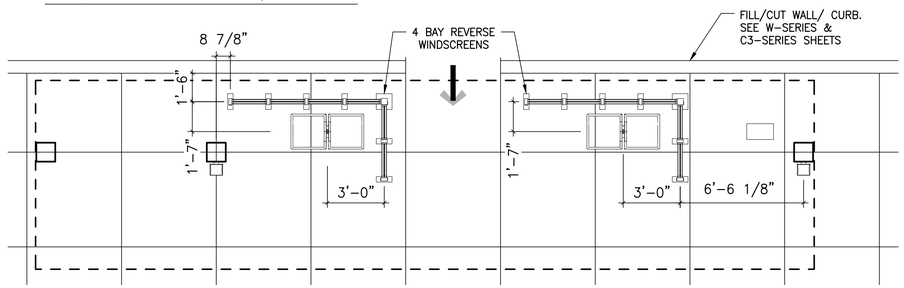

WINDSCREEN CONFIGURATION 5, REAR ENTRY

NOT USED

WINDSCREEN CONFIGURATION 3

ORANGE LINE PLATFORM WINDSCREEN CONFIGURATIONS

SCALE: 1/4" = 1' - 0"

STATION LOCATION	DIRECTION	STATION ID	WINDSCREEN CONFIGURATION
Western Terminus – Edmonds College	EB & WB	3221/3222	1
SR 524/196th St SW at SR 99	EB	3225	4
SR 524/196th St SW at SR 99	WB	3246	2
SR 99 at SR 524/196th St SW	NB	Blue Line #3247	1
Lynnwood Transit Center	EB	3228	SEE A3-SERIES
Lynnwood Transit Center	WB	3244	SEE A3-SERIES
33rd Ave W at 188th St SW	EB/NB	3229	1
33rd Ave W at 188th St SW	WB/SB	3243	4
36th Ave W at Maple Rd	EB/NB	3230	1
36th Ave W at Maple Rd	WB/SB	3242	1
164th St SW at Swamp Creek P&R	EB	3232	1
164th St SW at Swamp Creek P&R	WB	3240	2
Ash Way P&R	EB & WB	3233/3239	2
164th St SW at Larch Way	EB	3238	1
164th St SW at Larch Way	WB	3234	2
164th St SW at North Rd	EB	3237	1
164th St SW at North Rd	WB	3235	5
164th St SE at 9th Ave SE/Mill Creek Blvd	WB	3236	5
Eastern Terminus – McCollum Park P&R	EB & WB	3223/3224	1

ORANGE LINE STATION AND TERMINI WINDSCREEN CONFIGURATION TABLE

CALL BEFORE YOU DIG 1-800-424-5555

NO.	REVISION COMMENTS	BY	REVIEW	DATE

DESIGNER | DRAWN BY | CHECKED BY



11/5/21

communitytransit
Swift ORANGE LINE – 100% SUBMITTAL
STATION SHELTER & AMENITIES INSTALLATION
SHELTER ASSEMBLY - WINDSCREEN CONFIGUTATION

TITLE

Otak

11241 Willows Road NE, Suite 200
Redmond, WA 98052
425.822.4446
www.otak.com

32880.H
PROJECT NUMBER

S3.6

DRAWING NO.

SHEET 493 OF 622

© 2021 OTAK, INC.

Plotted: Nov 05, 2021 – 8:14pm K:\Project\32800\32880H\CADD\ACAD\Dwg\S3.6.dwg Layout Name: S3.6

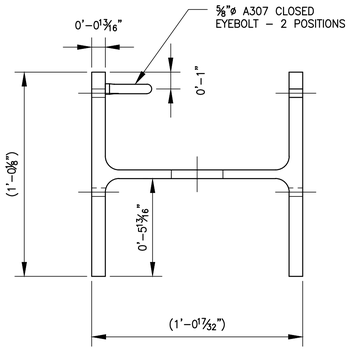

ROOF BEAM END VIEW

SCALE: 1" = 4 1/2"

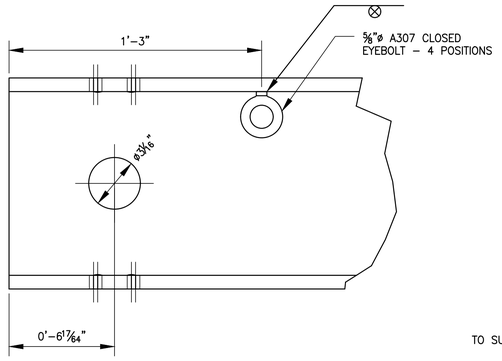

HOLE TYPE C DETAILS

SCALE: 1" = 4 1/2"

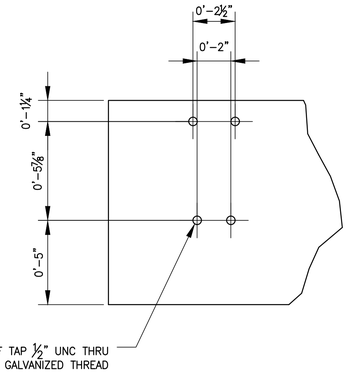

HOLE TYPE D DETAILS

SCALE: 1" = 4 1/2"

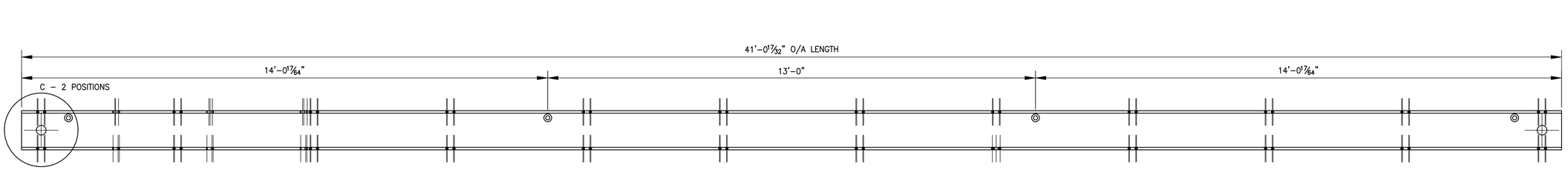

ROOF BEAM PLAN

SCALE: 2/3" = 1'-0"

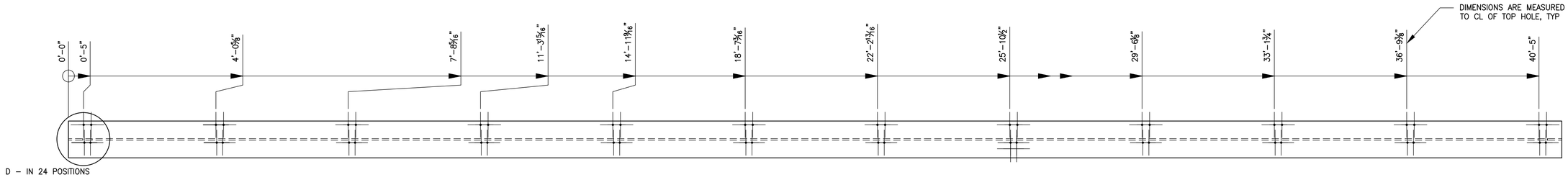

ROOF BEAM ELEVATION

SCALE: 2/3" = 1'-0"

CALL BEFORE YOU DIG 1-800-424-5555

NO.	REVISION COMMENTS	BY	REVIEW	DATE

DESIGNER | DRAWN BY | CHECKED BY

ROBERT P. DOHERTY — STATE OF WASHINGTON — 43425 — REGISTERED PROFESSIONAL ENGINEER

11/5/21

communitytransit
Swift ORANGE LINE – 100% SUBMITTAL
STATION SHELTER & AMENITIES INSTALLATION
ROOF BEAM DETAILS

TITLE

Otak
11241 Willows Road NE, Suite 200
Redmond, WA 98052
425.822.4446
www.otak.com

32880.H
PROJECT NUMBER

S4.1
DRAWING NO.

SHEET 494 OF 622

© 2021 OTAK, INC.

Plotted: Nov 05, 2021 – 8:15pm K:\Project\32800\32880H\CADD\ACAD\Dwg\S4.1.dwg Layout Name: S4.1

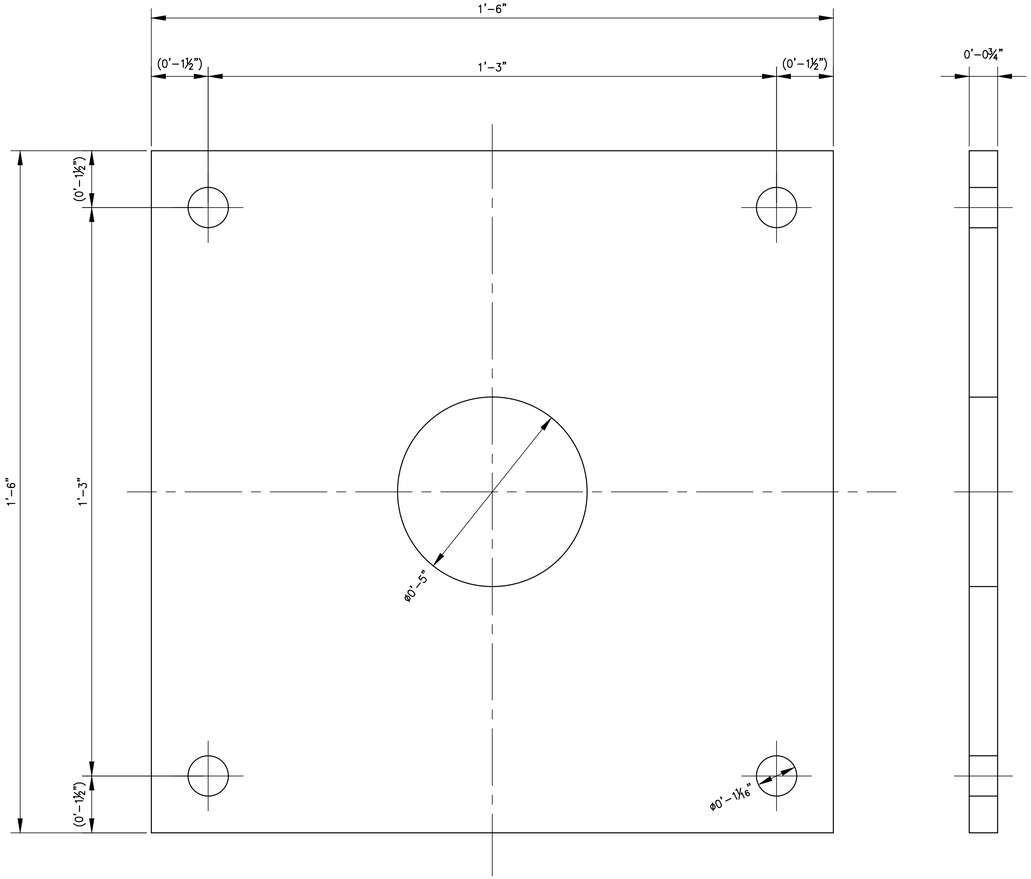

COLUMN BASE PLATE DETAIL

SCALE: 1" = 2"

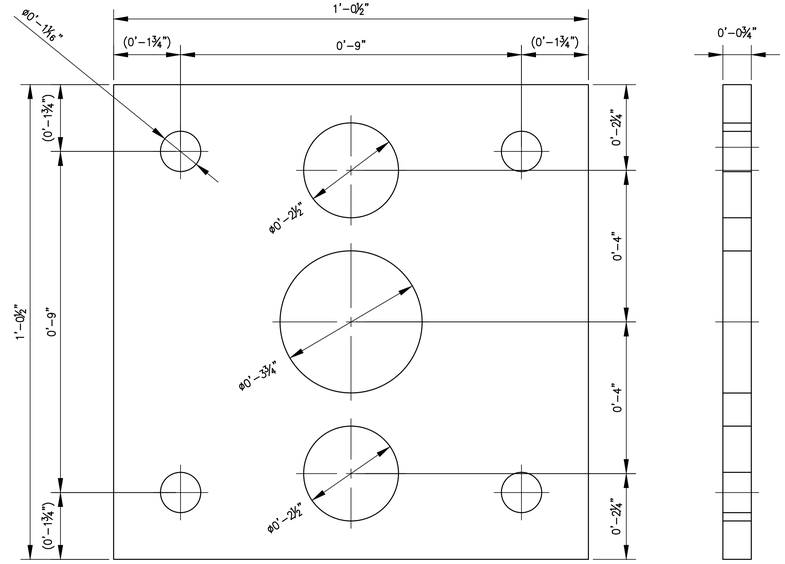

BEAM FIXING PLATE DETAIL

SCALE: 1" = 2"

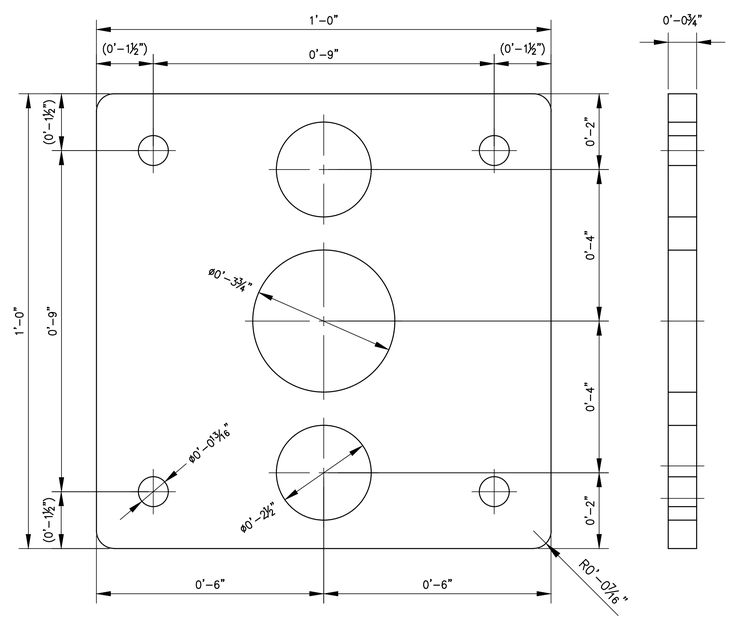

COLUMN FIXING PLATE DETAIL

SCALE: 1" = 2"

CALL BEFORE YOU DIG 1-800-424-5555

NO.	REVISION COMMENTS	BY	REVIEW	DATE

DESIGNER | DRAWN BY | CHECKED BY

ROBERT P. DOHERTY
STATE OF WASHINGTON
43425
REGISTERED PROFESSIONAL ENGINEER

11/5/21

communitytransit
Swift ORANGE LINE – 100% SUBMITTAL
STATION SHELTER & AMENITIES INSTALLATION
POST AND BEAM PLATE DETAILS

TITLE

Otak

11241 Willows Road NE, Suite 200
Redmond, WA 98052
425.822.4446
www.otak.com

32880.H
PROJECT NUMBER

S4.2

DRAWING NO.

SHEET 495 OF 622

© 2021 OTAK, INC.

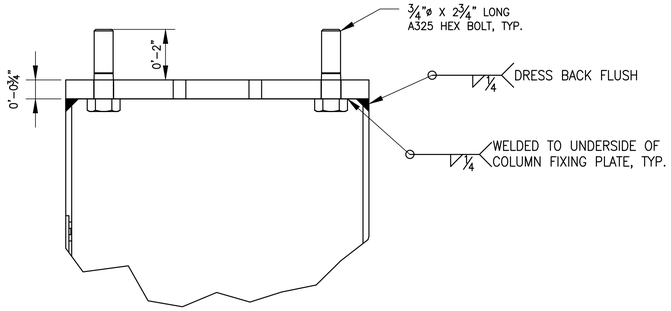

BOLT CONNECTION DETAILS

SCALE: 1" = 3"

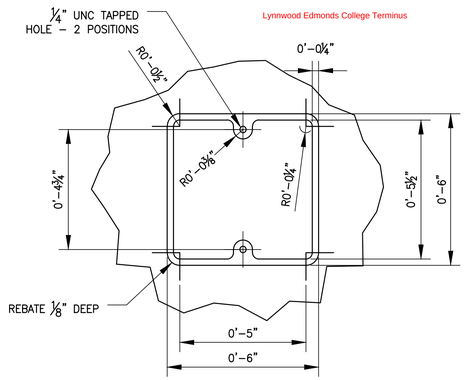

TYPE C ELECTRICAL JUNCTION DETAILS

SCALE: 1" = 3"

COLUMN LENGTH TABLE

STATION ID	FABRICATION LENGTH	BOX SECTION LENGTH
WESTERN TERMINUS - EDMONDS COLLEGE EB/WB	9'-8½"	9'-7"
SR 524/196TH ST SW AT SR 99 EB	9'-8½"	9'-7"
SR 524/196TH ST SW AT SR 99 WB	9'-1½"	9'-0"
SR 99 AT 196TH ST SW NB	9'-8½"	9'-7"
33RD AVE W AT 188TH ST SW EB/NB	9'-8½"	9'-7"
33RD AVE W AT 188TH ST SW WB/SB	9'-8½"	9'-7"
36TH AVE W AT MAPLE RD EB/NB	9'-8½"	9'-7"
36TH AVE W AT MAPLE RD WB/SB	9'-1½"	9'-0"
164TH ST SW AT SWAMP CREEK P&R EB	11'-2½"	11'-1"
164TH ST SW AT SWAMP CREEK P&R WB	8'-7½"	8'-6"
ASH WAY P&R EB/WB	9'-1½"	9'-0"
164TH ST SW AT LARCH WAY EB	12'-0½"	11'-11"
164TH ST SW AT LARCH WAY WB	8'-6½"	8'-5"
164TH ST SW AT NORTH RD EB	9'-8½"	9'-7"
164TH ST SW AT NORTH RD WB	9'-8½"	9'-7"
164TH ST SE AT 9TH AVE SE/MILL CREEK BLVD WB	9'-8½"	9'-7"
EASTERN TERMINUS - MCCOLLUM PARK P&R EB/WB	9'-8½"	9'-7"
185TH GARAGE WEST PLATFORM	9'-8½"	9'-7"
185TH GARAGE EAST PLATFORM	9'-8½"	9'-7"

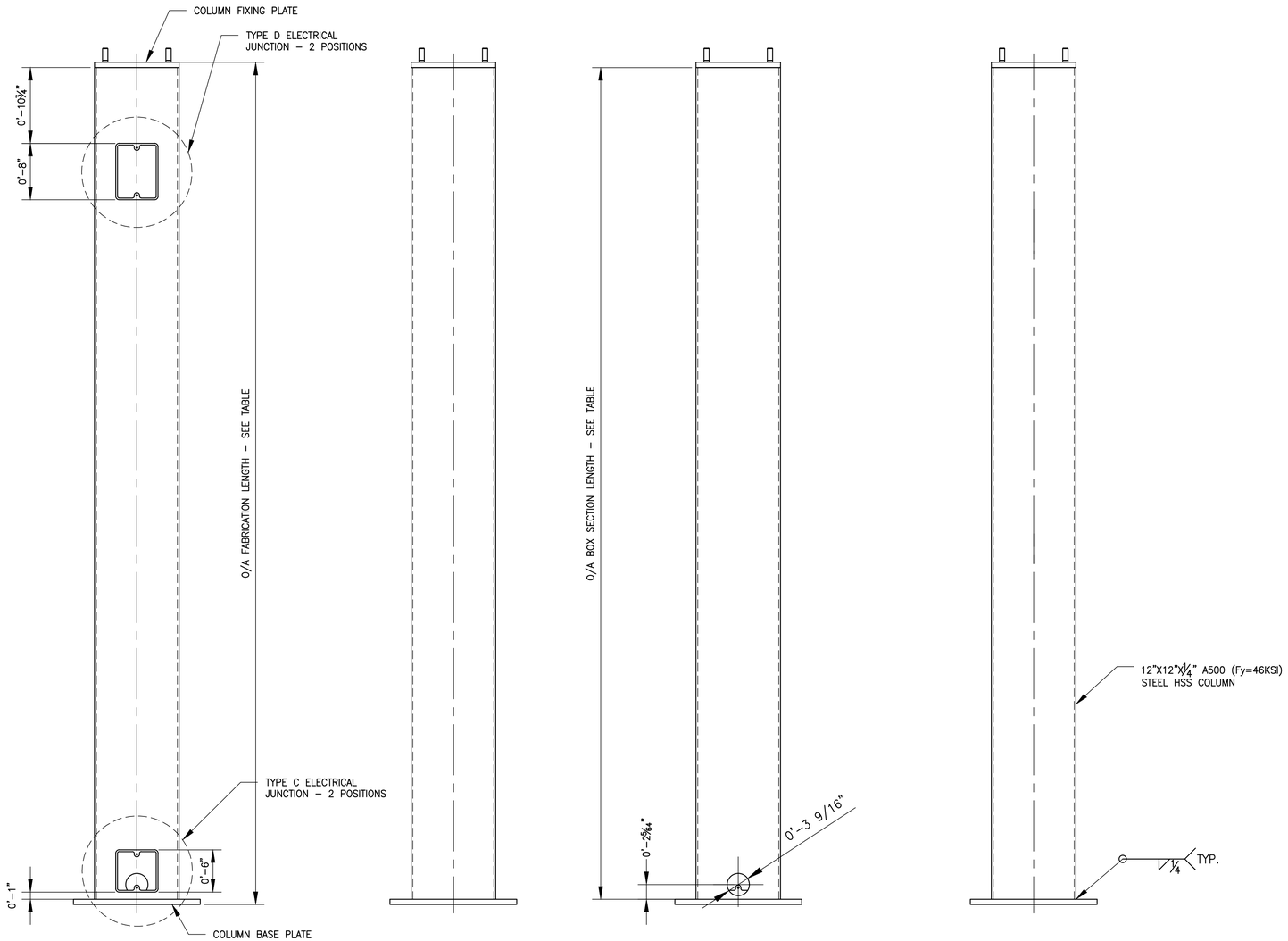

LH END COLUMN DETAILS

SCALE: 1 1/4" = 1'-0"

PARTS LIST

ITEM	QTY	DESCRIPTION
1	1	COLUMN BASE PLATE
2	1	LH END COLUMN
3	1	COLUMN FIXING PLATE
4	4	0.75 x 2.75 LG A325 HEX BOLTS

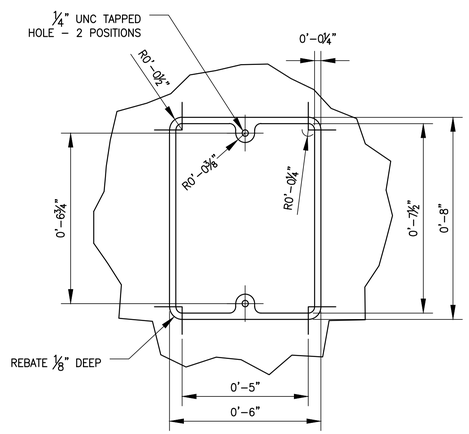

TYPE D ELECTRICAL JUNCTION DETAILS

SCALE: 1" = 3"

CALL BEFORE YOU DIG 1-800-424-5555

NO.	REVISION COMMENTS	BY	REVIEW	DATE

DESIGNER | DRAWN BY | CHECKED BY

ROBERT P. DOHERTY, STATE OF WASHINGTON, 43425, REGISTERED PROFESSIONAL ENGINEER

11/5/21

communitytransit Swift ORANGE LINE – 100% SUBMITTAL
STATION SHELTER & AMENITIES INSTALLATION
LH END POST FABRICATION DETAILS

TITLE

Otak

11241 Willows Road NE, Suite 200
Redmond, WA 98052
425.822.4446
www.otak.com

32880.H
PROJECT NUMBER

S4.3

DRAWING NO.

SHEET 496 OF 622

© 2021 OTAK, INC.

Plotted: Nov 05, 2021 – 8:20pm K:\Project\32800\32880H\CADD\ACAD\Dwg\S4.3.dwg Layout Name: S4.3

COLUMN LENGTH TABLE

STATION ID	FABRICATION LENGTH	BOX SECTION LENGTH
WESTERN TERMINUS - EDMONDS COLLEGE EB/WB	9'-11½"	9'-10"
SR 524/196TH ST SW AT SR 99 EB	9'-11½"	9'-10"
SR 524/196TH ST SW AT SR 99 WB	9'-11½"	9'-10"
SR 99 AT 196TH ST SW NB	9'-7½"	9'-6"
33RD AVE W AT 188TH ST SW EB/NB	9'-11½"	9'-10"
33RD AVE W AT 188TH ST SW WB/SB	9'-7½"	9'-6"
36TH AVE W AT MAPLE RD EB/NB	9'-7½"	9'-6"
36TH AVE W AT MAPLE RD WB/SB	9'-11½"	9'-10"
164TH ST SW AT SWAMP CREEK P&R EB	8'-8½"	8'-7"
164TH ST SW AT SWAMP CREEK P&R WB	10'-10½"	10'-9"
ASH WAY P&R EB/WB	9'-11½"	9'-10"
164TH ST SW AT LARCH WAY EB	8'-8½"	8'-7"
164TH ST SW AT LARCH WAY WB	11'-9½"	11'-8"
164TH ST SW AT NORTH RD EB	9'-7½"	9'-6"
164TH ST SW AT NORTH RD WB	9'-7½"	9'-6"
164TH ST SE AT 9TH AVE SE/MILL CREEK BLVD WB	9'-7½"	9'-6"
EASTERN TERMINUS - MCCOLLUM PARK P&R EB/WB	9'-11½"	9'-10"
185TH GARAGE WEST PLATFORM	9'-1½"	9'-0"
185TH GARAGE EAST PLATFORM	9'-1½"	9'-0"

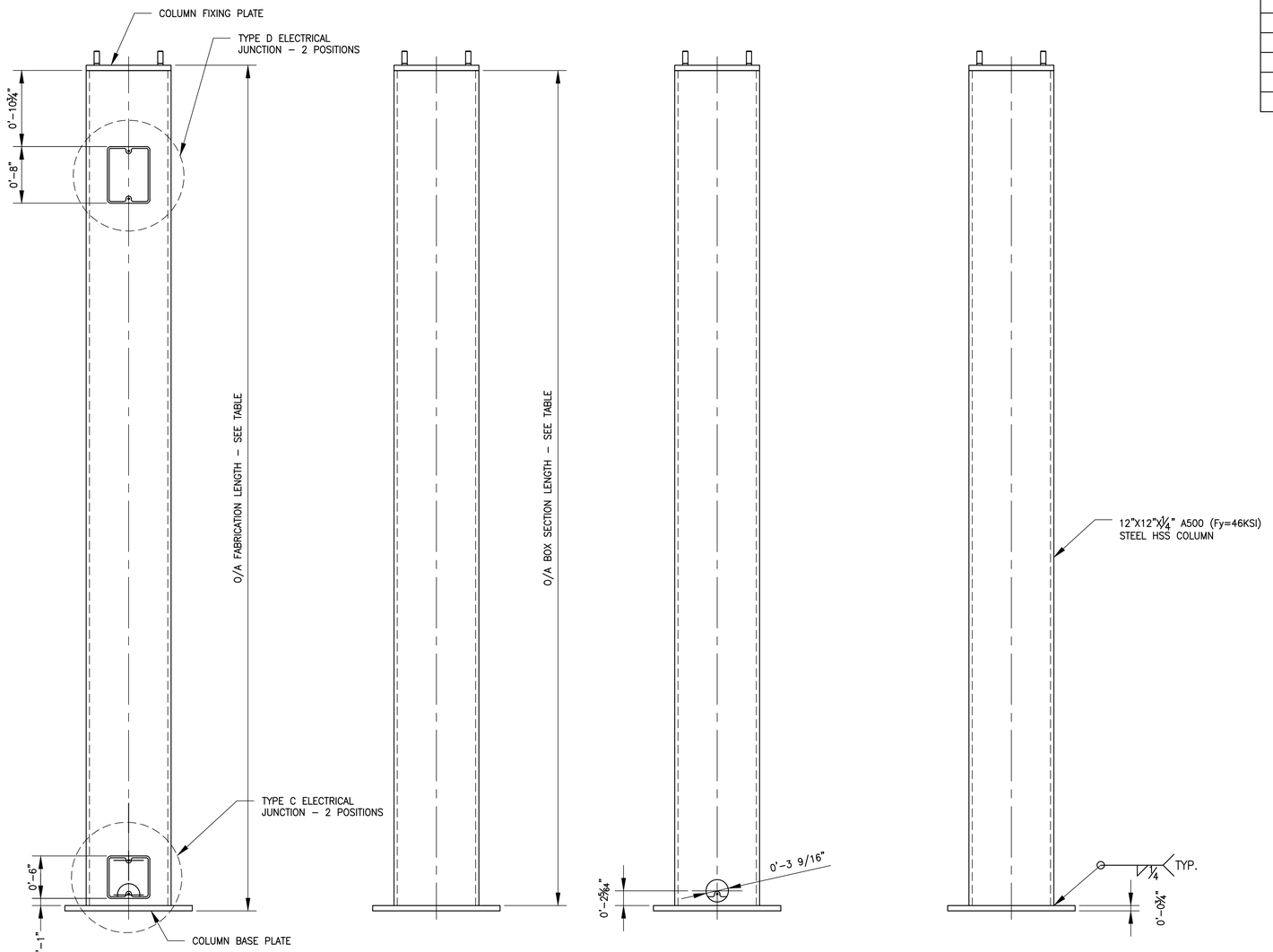

RH END COLUMN DETAILS

SCALE: 1 1/4" = 1'-0"

PARTS LIST

ITEM	QTY	DESCRIPTION
1	1	COLUMN BASE PLATE
2	1	RH END COLUMN
3	1	COLUMN FIXING PLATE
4	4	0.75 x 2.75 LG A325 HEX BOLTS

CALL BEFORE YOU DIG 1-800-424-5555

NO.	REVISION COMMENTS	BY	REVIEW	DATE

DESIGNER | DRAWN BY | CHECKED BY

ROBERT P. DOHERTY, STATE OF WASHINGTON, 43425, REGISTERED PROFESSIONAL ENGINEER

11/5/21

communitytransit
Swift ORANGE LINE – 100% SUBMITTAL
STATION SHELTER & AMENITIES INSTALLATION
RH END POST FABRICATION DETAILS

TITLE

Otak
11241 Willows Road NE, Suite 200
Redmond, WA 98052
425.822.4446
www.otak.com

32880.H
PROJECT NUMBER

S4.4
DRAWING NO.

SHEET 497 OF 622

© 2021 OTAK, INC.

Plotted: Nov 05, 2021 – 8:21pm K:\Project\32800\32880H\CADD\ACAD\Dwg\S4.4.dwg Layout Name: S4.4

PARTS LIST

ITEM	QTY	DESCRIPTION
1	1	COLUMN BASE PLATE
2	1	MIDDLE COLUMN
3	1	COLUMN FIXING PLATE
4	4	0.75 x 2.75 LG A325 HEX BOLTS

COLUMN LENGTH TABLE

STATION ID	FABRICATION LENGTH	BOX SECTION LENGTH
WESTERN TERMINUS - EDMONDS COLLEGE EB/WB	9'-5½"	9'-4"
SR 524/196TH ST SW AT SR 99 EB	9'-5½"	9'-4"
SR 524/196TH ST SW AT SR 99 WB	9'-5½"	9'-4"
SR 99 AT 196TH ST SW NB	9'-5½"	9'-4"
33RD AVE W AT 188TH ST SW EB/NB	9'-5½"	9'-4"
33RD AVE W AT 188TH ST SW WB/SB	9'-5½"	9'-4"
36TH AVE W AT MAPLE RD EB/NB	9'-5½"	9'-4"
36TH AVE W AT MAPLE RD WB/SB	9'-5½"	9'-4"
164TH ST SW AT SWAMP CREEK P&R EB	10'-7½"	10'-6"
164TH ST SW AT SWAMP CREEK P&R WB	9'-1½"	9'-0"
ASH WAY P&R EB/WB	9'-5½"	9'-4"
164TH ST SW AT LARCH WAY EB	11'-3½"	11'-2"
164TH ST SW AT LARCH WAY WB	9'-2½"	9'-1"
164TH ST SW AT NORTH RD EB	9'-5½"	9'-4"
164TH ST SW AT NORTH RD WB	9'-5½"	9'-4"
164TH ST SE AT 9TH AVE SE/MILL CREEK BLVD WB	9'-5½"	9'-4"
EASTERN TERMINUS - MCCOLLUM PARK P&R EB/WB	9'-5½"	9'-4"
185TH GARAGE WEST PLATFORM	9'-5½"	9'-4"
185TH GARAGE EAST PLATFORM	9'-5½"	9'-4"

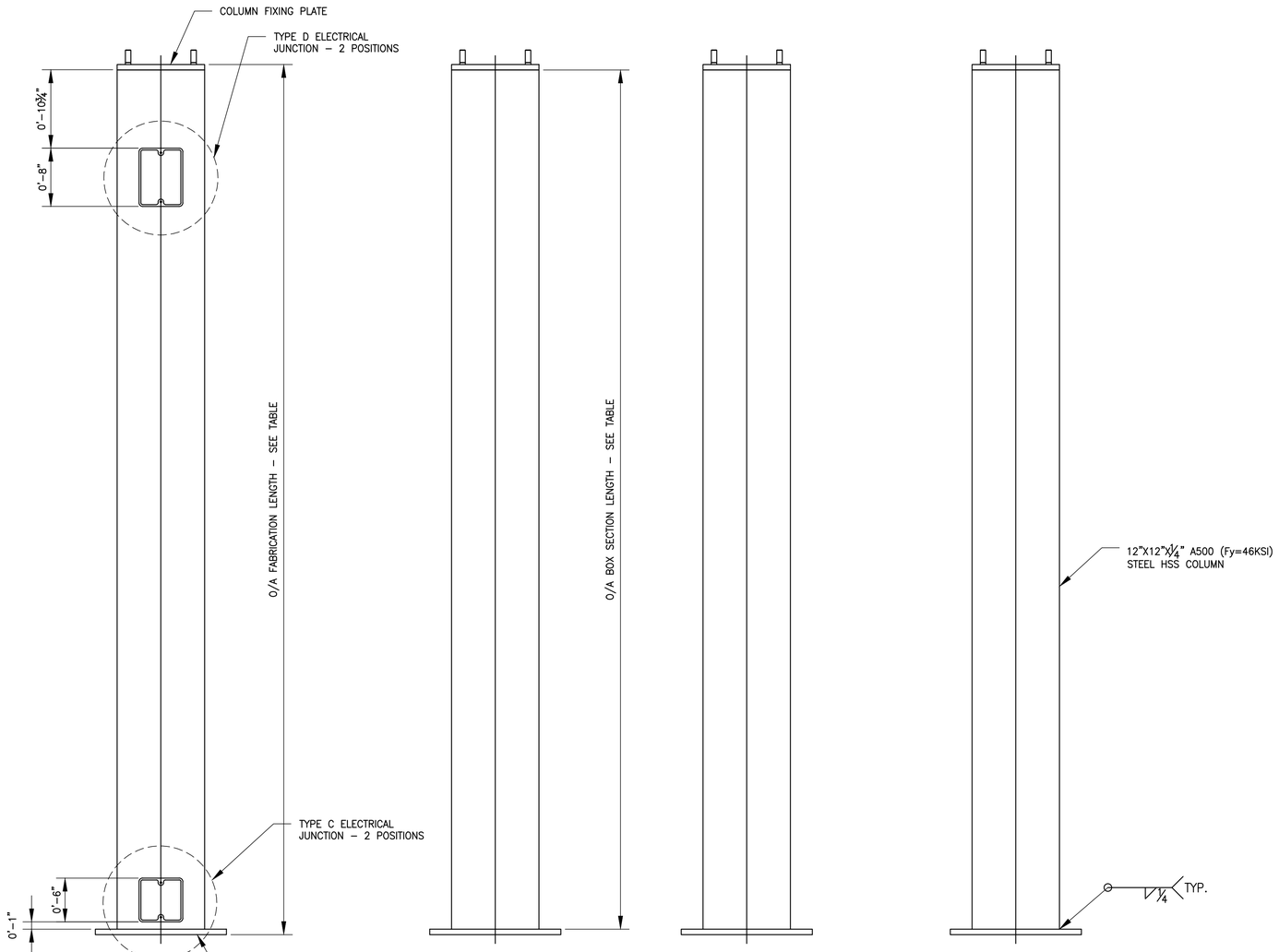

MIDDLE COLUMN DETAILS

SCALE: 1 1/4" = 1'-0"

CHECKED BY	DRAWN BY	DESIGNER

NO.	REVISION COMMENTS	BY	REVIEW	DATE
1	100% Submittal,			3/22/2022

ROBERT P. DOHERTY
STATE OF WASHINGTON
43425
REGISTERED
PROFESSIONAL ENGINEER

11/5/21

SWIFT ORANGE LINE – 100% SUBMITTAL

STATION SHELTER & AMENITIES INSTALLATION
MIDDLE POST FABRICATION DETAILS

TITLE

Otak
11241 Willows Road NE, Suite 200
Redmond, WA 98052
425.822.4446
www.otak.com

32880.H
PROJECT NUMBER

S4.5
DRAWING NO.

SHEET 498 OF 622

© 2021 OTAK, INC.

CALL BEFORE YOU DIG 1–800–424–5555

Plotted: Nov 05, 2021 – 8:21pm K:\Project\32800\32880H\CADD\ACAD\Dwg\S4.5.dwg Layout Name: S4.5

PARTS LIST

ITEM	QTY	DESCRIPTION
1	1	BASE PLATE
2	1	COLUMN
3	4	GUSSET PLATE
4	6	SUPPORT RINGS
5	1	TOP REAR SUPPORT FRAME

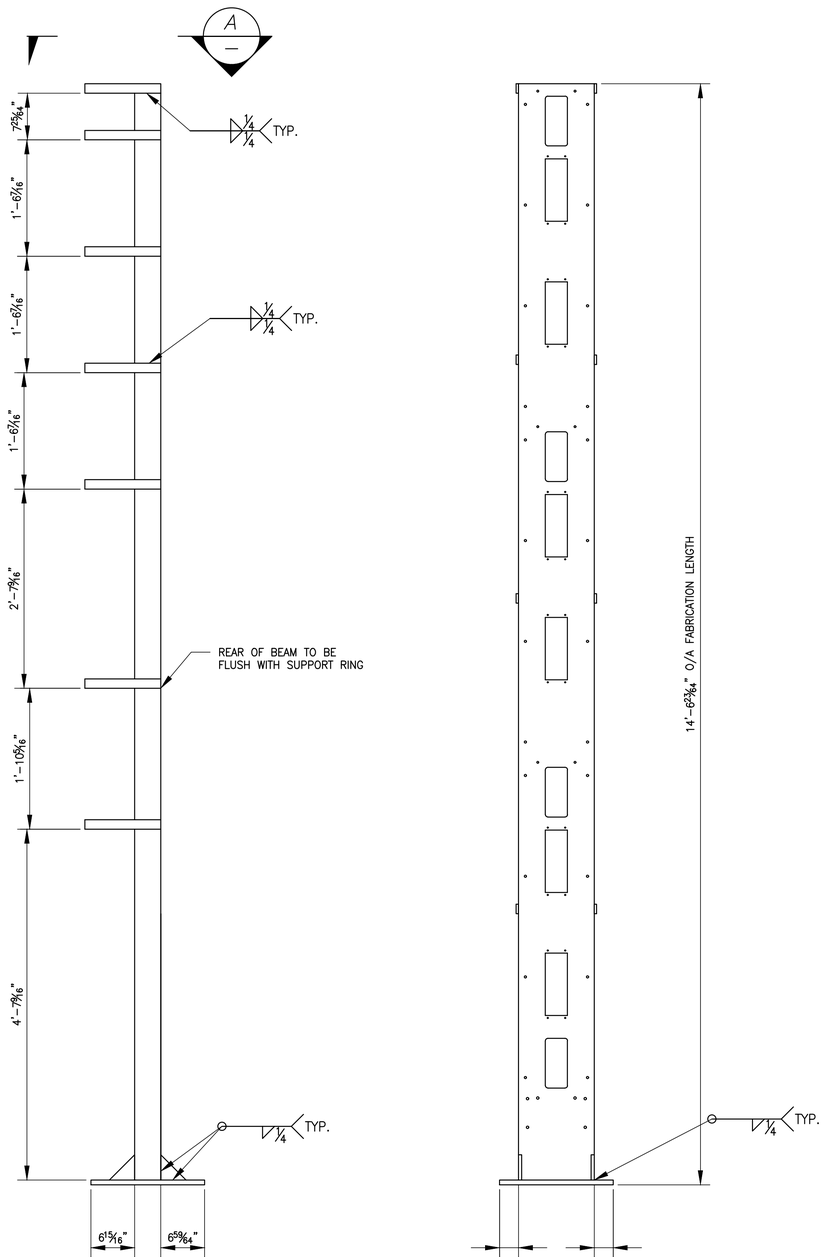

TOTEM DETAILS

SCALE: 1" = 1'-0"

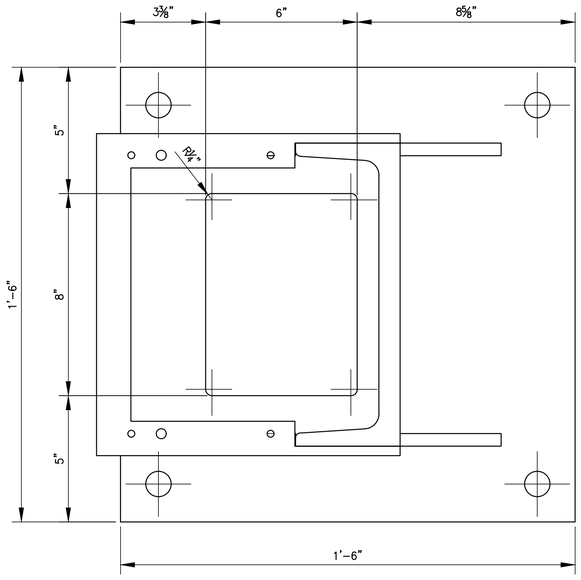

VIEW A

SCALE: 1" = 3"

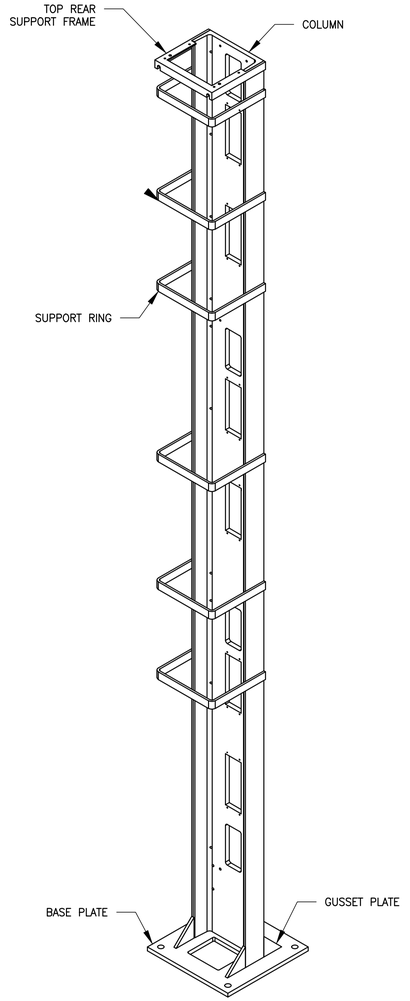

ICONIC MARKER ISOMETRIC VIEW

SCALE: NTS

CALL BEFORE YOU DIG 1-800-424-5555

NO.	REVISION COMMENTS	BY	REVIEW	DATE

DESIGNER | DRAWN BY | CHECKED BY

ROBERT P. DOHERTY, STATE OF WASHINGTON, 43425, REGISTERED PROFESSIONAL ENGINEER

11/5/21

communitytransit Swift ORANGE LINE - 100% SUBMITTAL
STATION SHELTER & AMENITIES INSTALLATION
TOTEM FRAME FABRICATION DETAILS

TITLE

Otak

11241 Willows Road NE, Suite 200
Redmond, WA 98052
425.822.4446
www.otak.com

32880.H
PROJECT NUMBER

S5.1

DRAWING NO.

SHEET 499 OF 622

© 2021 OTAK, INC.

Plotted: Nov 05, 2021 - 8:22pm K:\Project\32800\32880H\CADD\ACAD\Dwg\S5.1.dwg Layout Name: S5.1

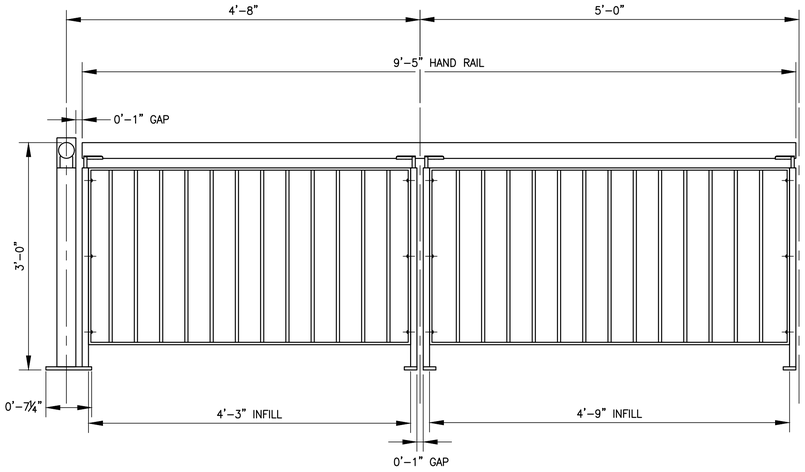

RAILING ELEVATION PANEL A

SCALE: 1" = 1'–0"

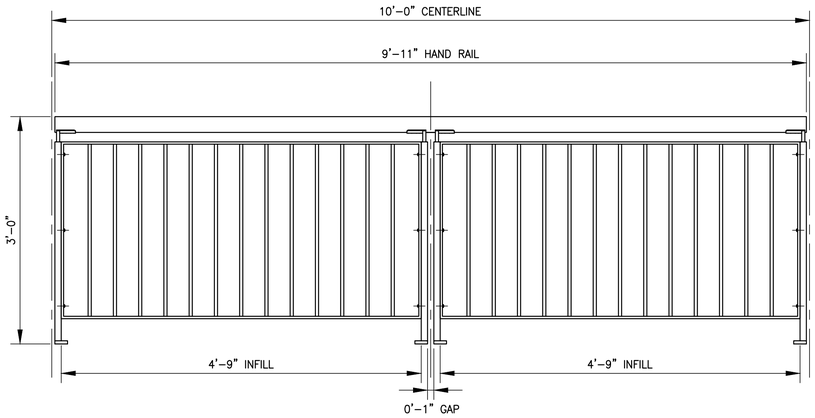

RAILING ELEVATION PANEL B

SCALE: 1" = 1'–0"

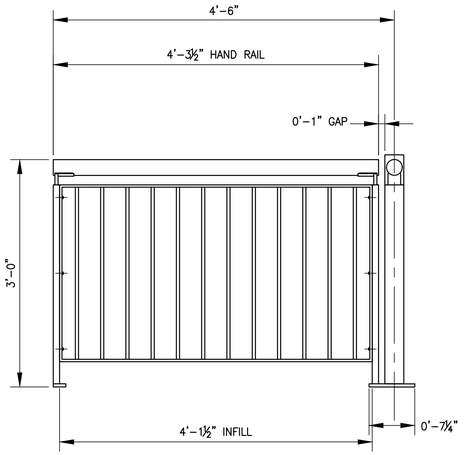

RAILING ELEVATION PANEL C

SCALE: 1" = 1'–0"

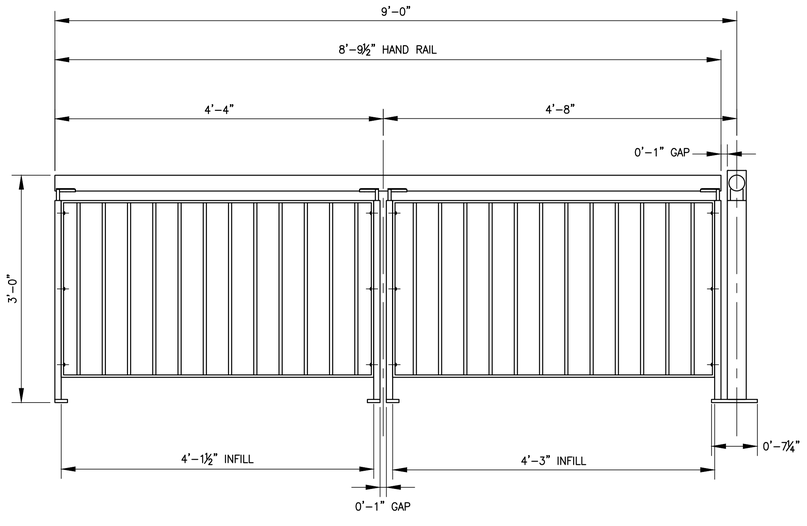

RAILING ELEVATION PANEL D

SCALE: 1" = 1'–0"

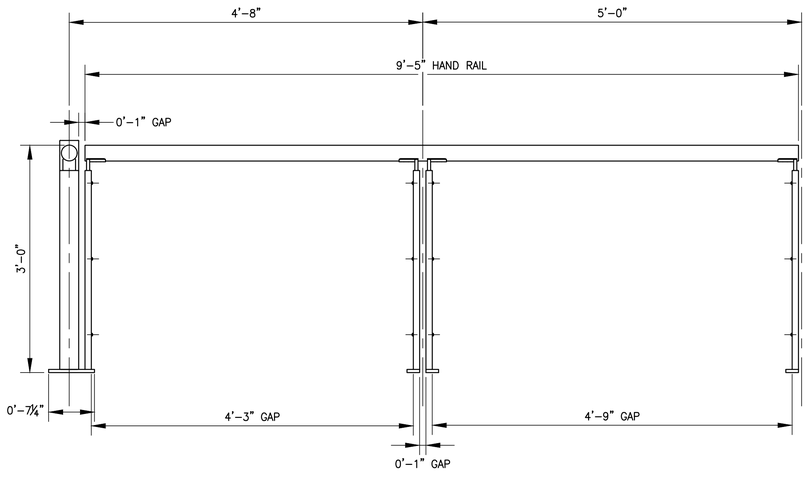

RAILING ELEVATION PANEL E

SCALE: 1" = 1'–0"

NOTES

1. FOR DETAILS REFER TO DRAWINGS S6.3 TO S6.9
2. RAILING TO BE OWNER FURNISHED AND CONTRACTOR INSTALLED. SEE PROJECT SPECIFICATIONS.

CALL BEFORE YOU DIG 1–800–424–5555

NO.	REVISION COMMENTS	BY	REVIEW	DATE

DESIGNER

DRAWN BY

CHECKED BY

PDR Submittal, 3/22/2022

ROBERT P. DOHERTY — STATE OF WASHINGTON — 43425 — REGISTERED PROFESSIONAL ENGINEER

11/5/21

community transit

Swift ORANGE LINE – 100% SUBMITTAL

STATION SHELTER & AMENITIES INSTALLATION

STATION RAILING LAYOUTS

TITLE

Otak

11241 Willows Road NE, Suite 200
Redmond, WA 98052
425.822.4446
www.otak.com

32880.H
PROJECT NUMBER

S6.1
DRAWING NO.

SHEET 500 OF 622

© 2021 OTAK, INC.

Plotted: Nov 05, 2021 - 8:23pm K:\Project\32800\32880H\CADD\ACAD\Dwg\S6.1-S6.2.dwg Layout Name: S6.1

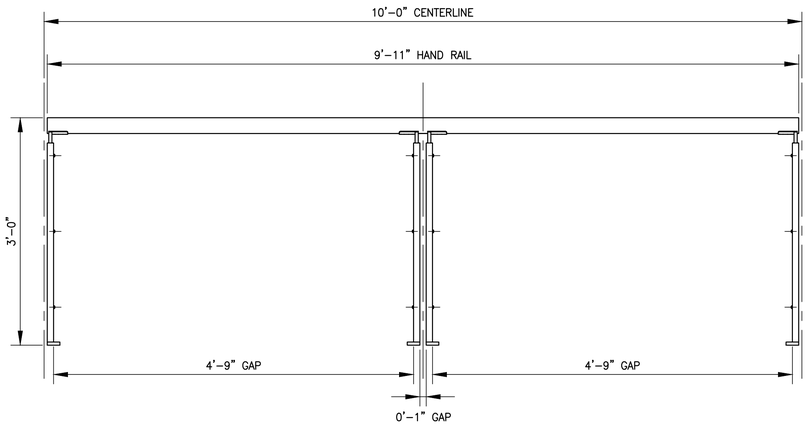

RAILING ELEVATION PANEL F

SCALE: 1" = 1'-0"

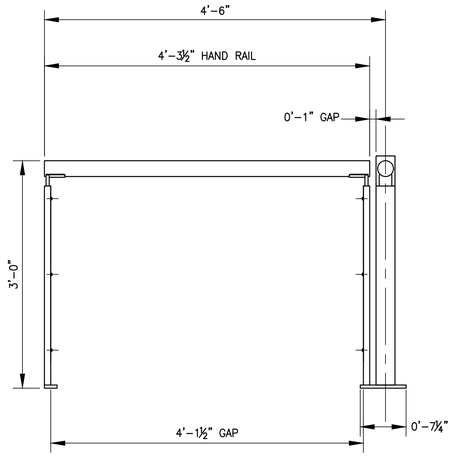

RAILING ELEVATION PANEL G

SCALE: 1" = 1'-0"

NOTES

1. FOR DETAILS REFER TO DRAWINGS S6.3 TO S6.9
2. RAILING TO BE OWNER FURNISHED AND CONTRACTOR INSTALLED. SEE PROJECT SPECIFICATIONS.

CALL BEFORE YOU DIG 1-800-424-5555

NO.	REVISION COMMENTS	BY	REVIEW	DATE

DESIGNER | DRAWN BY | CHECKED BY

ROBERT P. DOHERTY
STATE OF WASHINGTON
43425
REGISTERED PROFESSIONAL ENGINEER
11/5/21

communitytransit
Swift ORANGE LINE - 100% SUBMITTAL
STATION SHELTER & AMENITIES INSTALLATION
STATION RAILING LAYOUTS

TITLE

Otak

11241 Willows Road NE, Suite 200
Redmond, WA 98052
425.822.4446
www.otak.com

32880.H
PROJECT NUMBER

S6.2

DRAWING NO.

SHEET 501 OF 622

© 2021 OTAK, INC.

Plotted: Nov 05, 2021 - 8:23pm K:\Project\32800\32880H\CADD\ACAD\Dwg\S6.1-S6.2.dwg Layout Name: S6.2

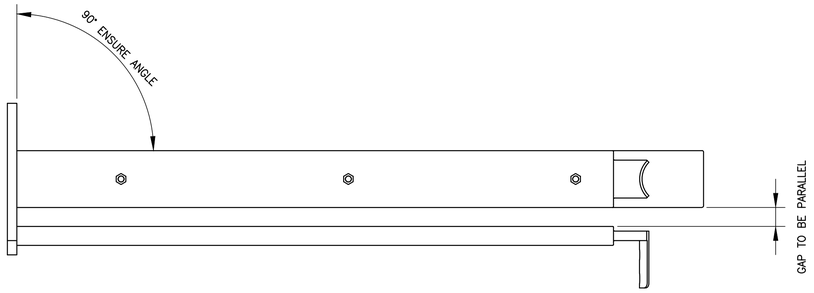

LEFT VIEW

SCALE: 1" = 4"

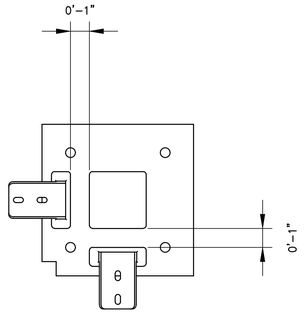

PLAN VIEW

SCALE: 1" = 4"

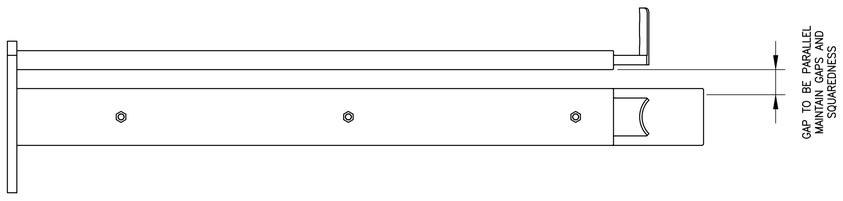

FRONT VIEW

SCALE: 1" = 4"

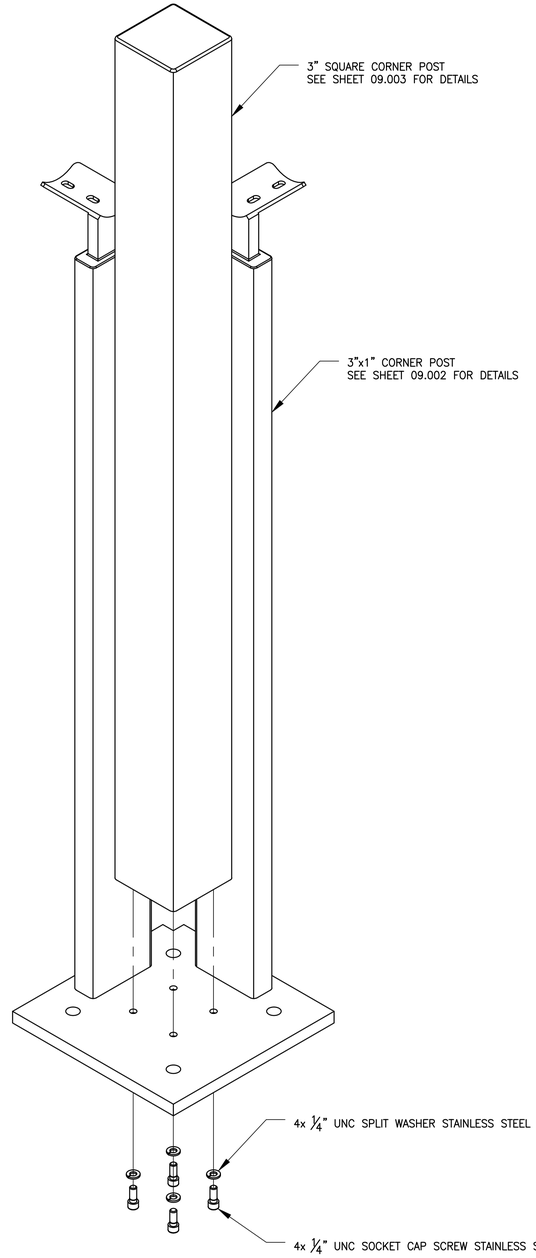

ISOMETRIC VIEW

NTS

NOTES

1. RAILING TO BE OWNER FURNISHED AND CONTRACTOR INSTALLED. SEE PROJECT SPECIFICATIONS.

CALL BEFORE YOU DIG 1-800-424-5555

DESIGNER	DRAWN BY	CHECKED BY

NO.	REVISION COMMENTS	BY	REVIEW	DATE

ROBERT P. DOHERTY
STATE OF WASHINGTON
43425
REGISTERED PROFESSIONAL ENGINEER
11/5/21

communitytransit
Swift ORANGE LINE - 100% SUBMITTAL
STATION SHELTER & AMENITIES INSTALLATION
CORNER POST ASSEMBLY DETAILS

TITLE

Otak

11241 Willows Road NE, Suite 200
Redmond, WA 98052
425.822.4446
www.otak.com

32880.H
PROJECT NUMBER

S6.3

DRAWING NO.

SHEET 502 OF 622

© 2021 OTAK, INC.

Plotted: Nov 05, 2021 - 8:24pm K:\Project\32800\32880H\CADD\ACAD\Dwg\S6.3.dwg Layout Name: S6.3

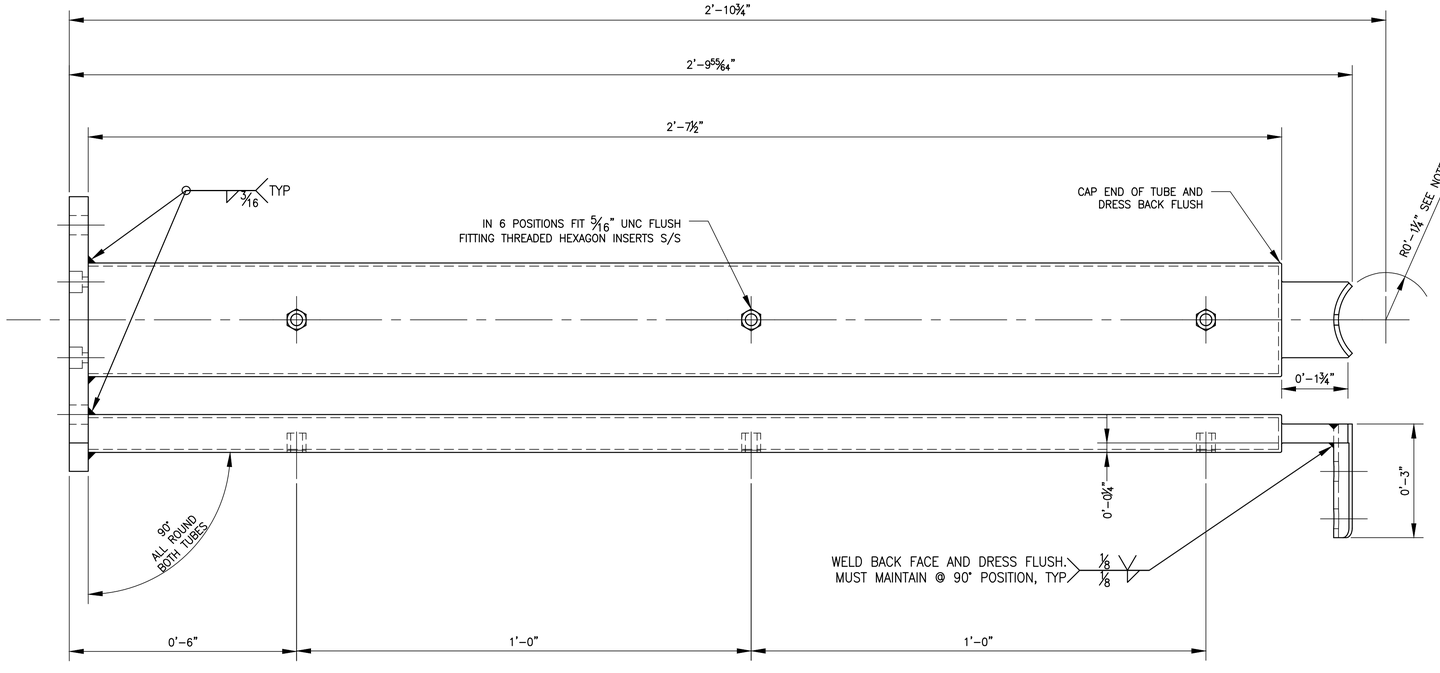

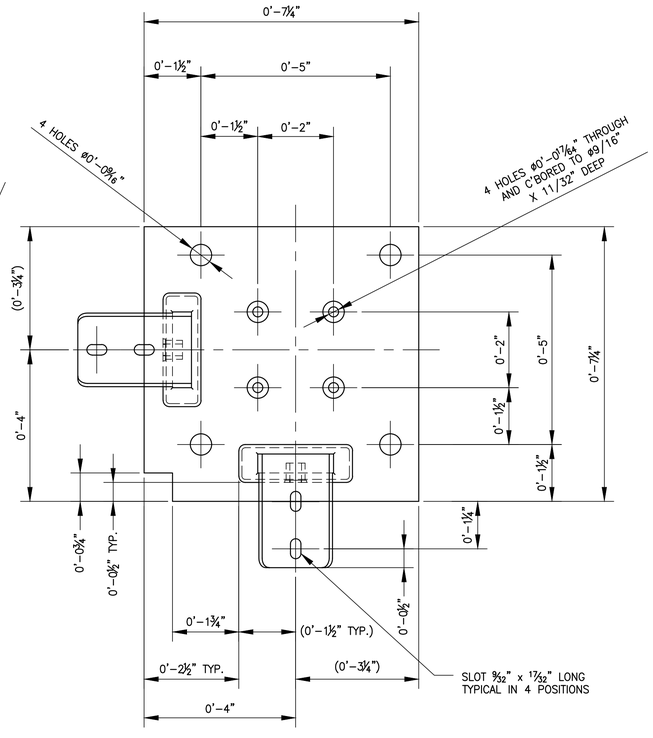

CORNER POST WELDED ASSEMBLY

SCALE: 1" = 2"

NOTES

1. RAILING TO BE OWNER FURNISHED AND CONTRACTOR INSTALLED. SEE PROJECT SPECIFICATIONS.

CALL BEFORE YOU DIG 1-800-424-5555

NO.	REVISION COMMENTS	BY	REVIEW	DATE

DESIGNER | DRAWN BY | CHECKED BY

11/5/21

community transit

Swift ORANGE LINE – 100% SUBMITTAL

STATION SHELTER & AMENITIES INSTALLATION

CORNER POST WELDED ASSEMBLY

TITLE

Otak

11241 Willows Road NE, Suite 200
Redmond, WA 98052
425.822.4446
www.otak.com

32880.H
PROJECT NUMBER

S6.4
DRAWING NO.

SHEET 503 OF 622

© 2021 OTAK, INC.

Plotted: Nov 05, 2021 – 8:25pm K:\Project\32800\32880H\CADD\ACAD\Dwg\S6.4.dwg Layout Name: S6.4

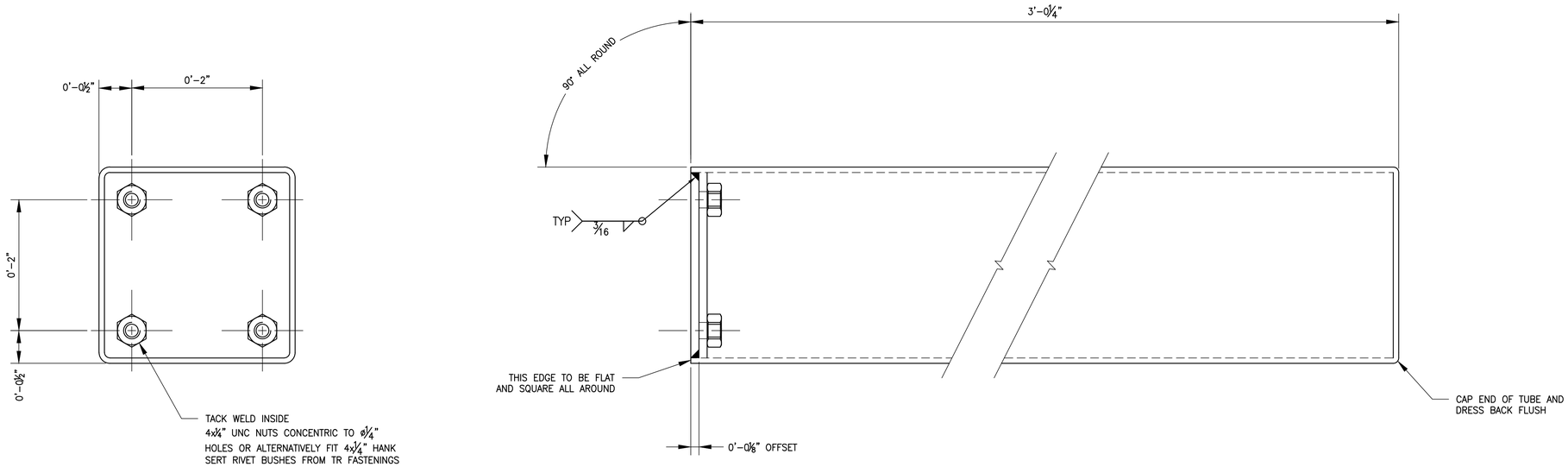

3" CORNER POST WELDED ASSEMBLY

SCALE: 1" = 1"

NOTES

1. RAILING TO BE OWNER FURNISHED AND CONTRACTOR INSTALLED. SEE PROJECT SPECIFICATIONS.

CALL BEFORE YOU DIG 1-800-424-5555

NO.	REVISION COMMENTS	BY	REVIEW	DATE

DESIGNER | DRAWN BY | CHECKED BY

11/5/21

communitytransit

Swift ORANGE LINE – 100% SUBMITTAL

STATION SHELTER & AMENITIES INSTALLATION

3" CORNER POST WELDED ASSEMBLY

TITLE

Otak

11241 Willows Road NE, Suite 200
Redmond, WA 98052
425.822.4446
www.otak.com

32880.H
PROJECT NUMBER

S6.5
DRAWING NO.

SHEET 504 OF 622

© 2021 OTAK, INC.

Plotted: Nov 05, 2021 - 8:26pm K:\Project\32800\32880H\CADD\ACAD\Dwg\S6.5.dwg Layout Name: S6.5

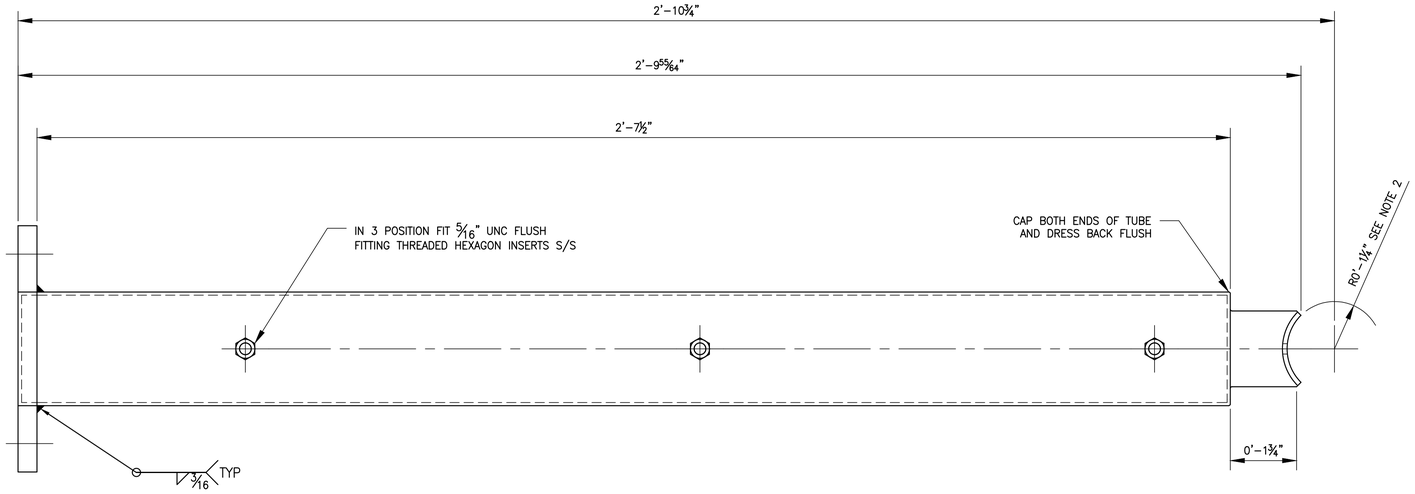

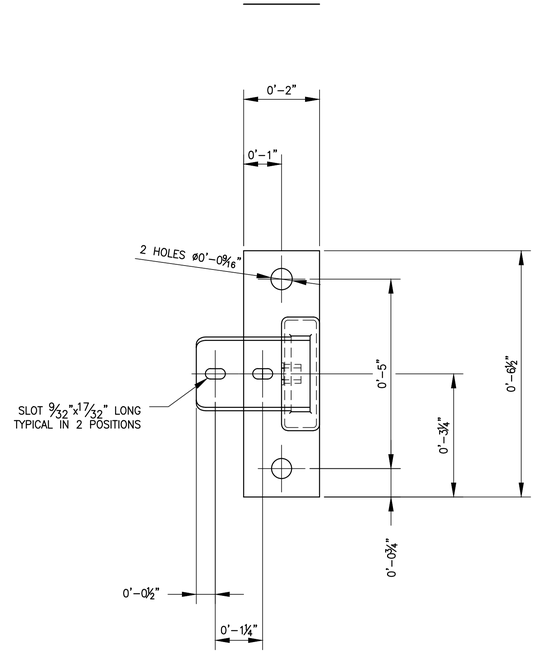

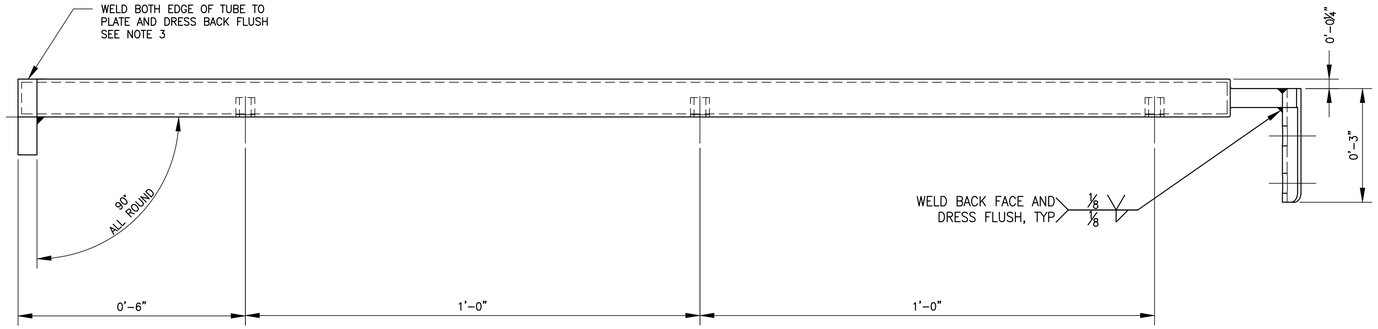

MID POST WELDED ASSEMBLY

SCALE: 1" = 2"

NOTES

1. RAILING TO BE OWNER FURNISHED AND CONTRACTOR INSTALLED. SEE PROJECT SPECIFICATIONS.

CALL BEFORE YOU DIG 1-800-424-5555

NO.	REVISION COMMENTS	BY	REVIEW	DATE
1	100% Submittal,			3/22/2022

DESIGNER | DRAWN BY | CHECKED BY

ROBERT P. DOHERTY — STATE OF WASHINGTON — 43425 — REGISTERED PROFESSIONAL ENGINEER

11/5/21

community transit

Swift ORANGE LINE – 100% SUBMITTAL

STATION SHELTER & AMENITIES INSTALLATION

MID POST WELDED ASSEMBLY

TITLE

Otak

11241 Willows Road NE, Suite 200
Redmond, WA 98052
425.822.4446
www.otak.com

32880.H
PROJECT NUMBER

S6.6
DRAWING NO.

SHEET 505 OF 622

© 2021 OTAK, INC.

Plotted: Nov 05, 2021 - 8:27pm K:\Project\32800\32880H\CADD\ACAD\Dwg\S6.6.dwg Layout Name: S6.6

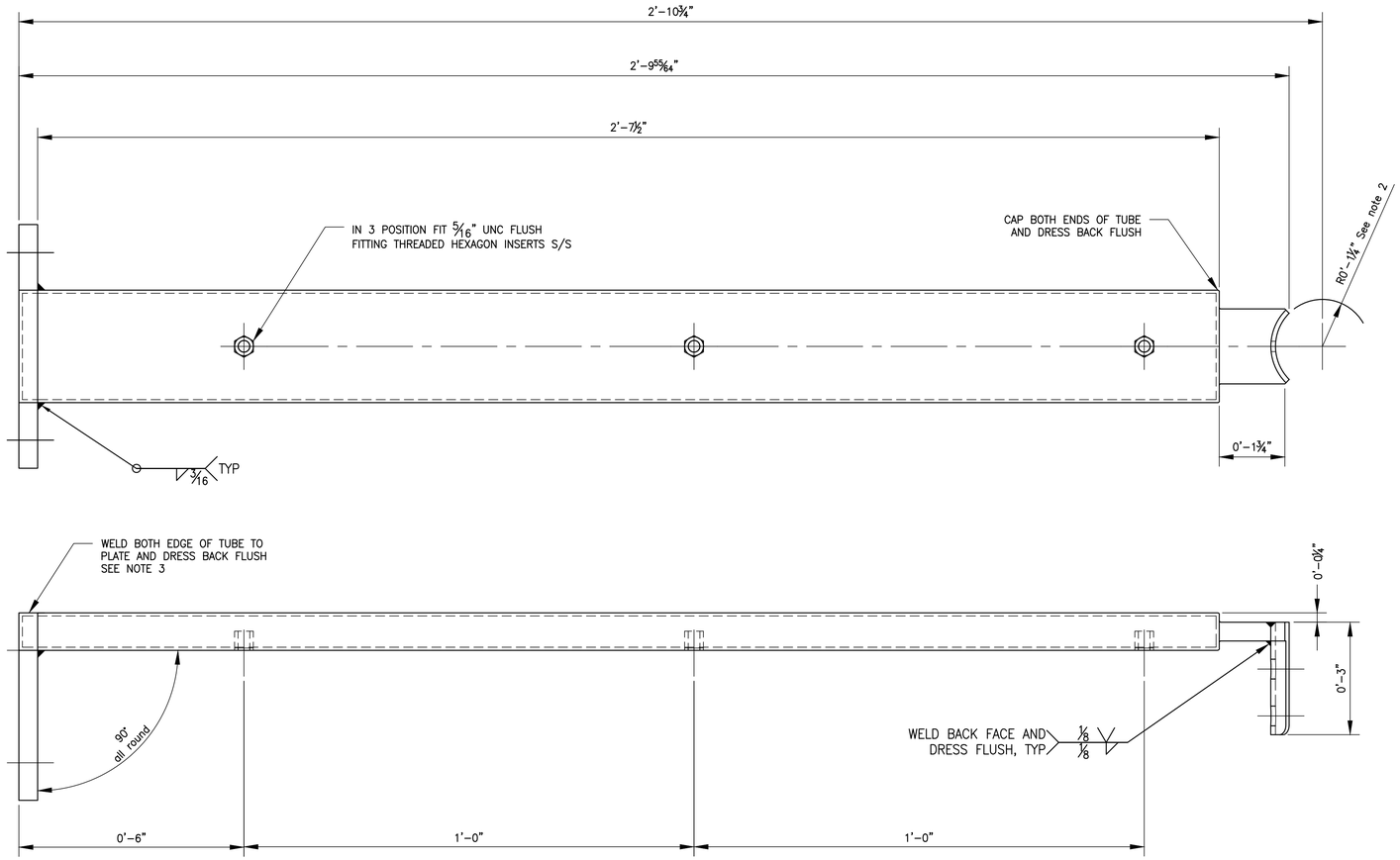

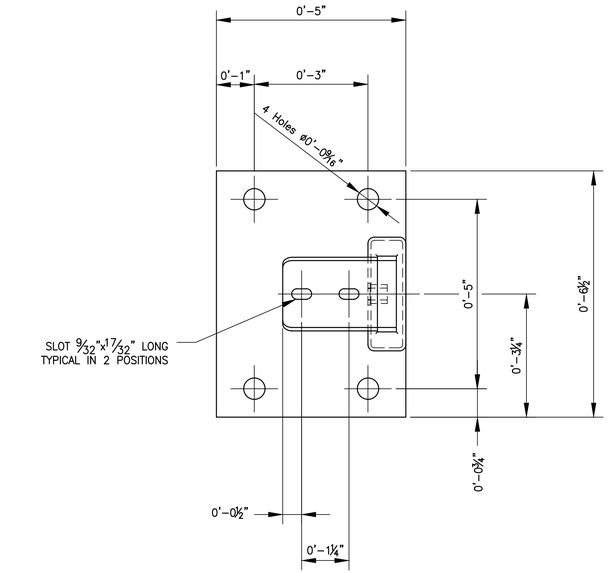

STEP DOWN POST WELDED ASSEMBLY

SCALE: 1" = 2"

NOTES

1. RAILING TO BE OWNER FURNISHED AND CONTRACTOR INSTALLED. SEE PROJECT SPECIFICATIONS.

CALL BEFORE YOU DIG 1-800-424-5555

NO.	REVISION COMMENTS	BY	REVIEW	DATE

DESIGNER | DRAWN BY | CHECKED BY

ROBERT P. DOHERTY
STATE OF WASHINGTON
43425
REGISTERED
PROFESSIONAL ENGINEER

11/5/21

communitytransit
Swift ORANGE LINE – 100% SUBMITTAL
STATION SHELTER & AMENITIES INSTALLATION
STEP DOWN POST WELDED ASSEMBLY

TITLE

Otak
11241 Willows Road NE, Suite 200
Redmond, WA 98052
425.822.4446
www.otak.com

32880.H
PROJECT NUMBER

S6.7
DRAWING NO.

SHEET 506 OF 622

© 2021 OTAK, INC.

Plotted: Nov 05, 2021 - 8:28pm K:\Project\32800\32880H\CADD\ACAD\Dwg\S6.7.dwg Layout Name: S6.7

RAILING	DIMENSION 'L'	BARS
RAILING TYPE 1	4'-3"	12
RAILING TYPE 2	4'-9"	13
RAILING TYPE 3	4'-1 1/2"	12
RAILING TYPE 4	4'-3"	12

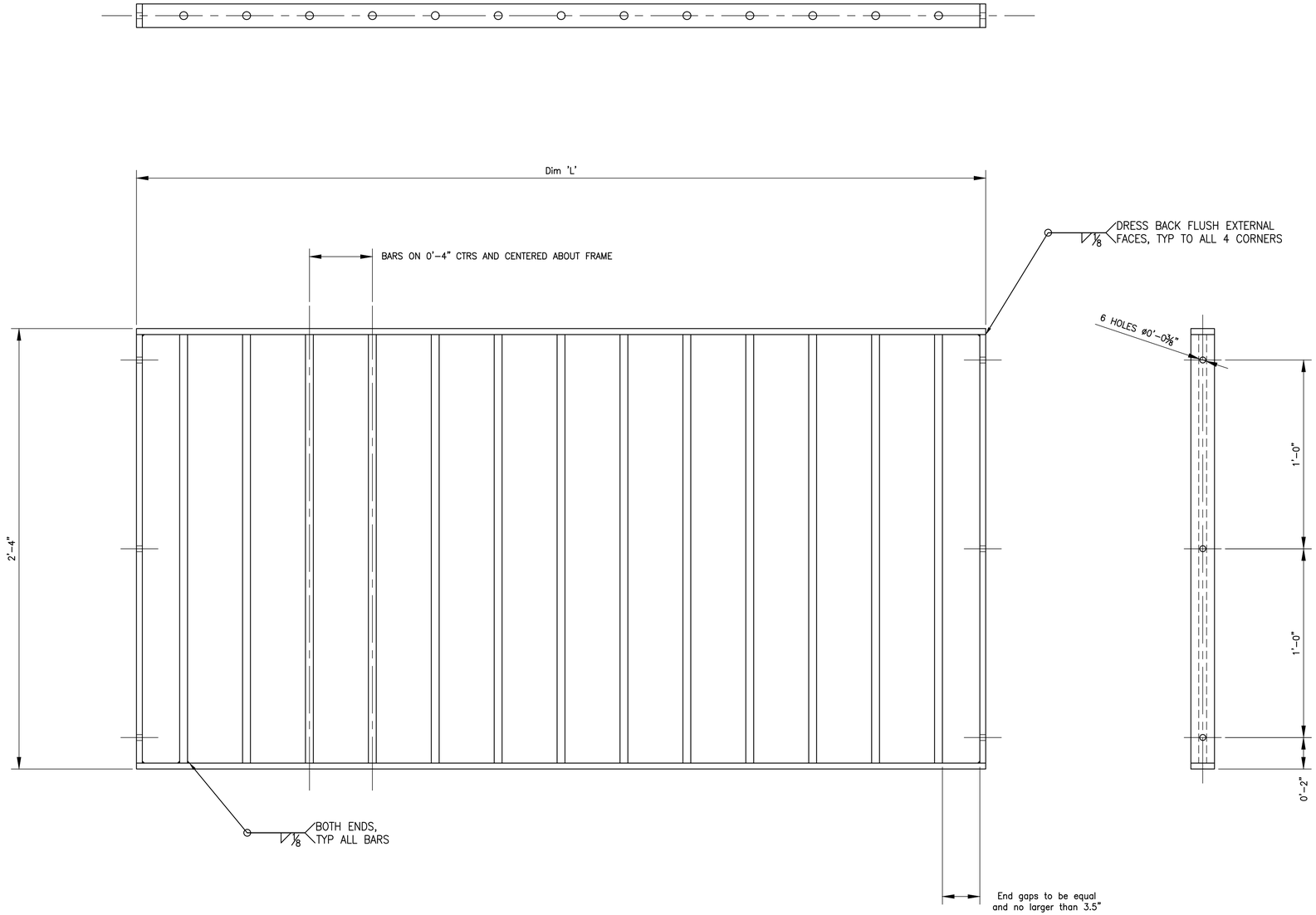

IN-FILL PANEL DETAILS

SCALE: 1" = 4"

NOTES

1. RAILING TO BE OWNER FURNISHED AND CONTRACTOR INSTALLED. SEE PROJECT SPECIFICATIONS.

CALL BEFORE YOU DIG 1-800-424-5555

NO.	REVISION COMMENTS	BY	REVIEW	DATE
1	100% Submittal			3/22/2022

DESIGNER | DRAWN BY | CHECKED BY

ROBERT P. DOHERTY — STATE OF WASHINGTON — 43425 — REGISTERED PROFESSIONAL ENGINEER

11/5/21

community transit

Swift ORANGE LINE – 100% SUBMITTAL

STATION SHELTER & AMENITIES INSTALLATION

IN-FILL PANEL DETAILS

TITLE

Otak

11241 Willows Road NE, Suite 200
Redmond, WA 98052
425.822.4446
www.otak.com

32880.H
PROJECT NUMBER

S6.8
DRAWING NO.

SHEET 507 OF 622

© 2021 OTAK, INC.

Plotted: Nov 05, 2021 - 8:29pm K:\Project\32800\32880H\CADD\ACAD\Dwg\S6.8.dwg Layout Name: S6.8

PDR-009731-2021
Lynnwood Edmonds College Terminus
Full Submittal, Rev 3/22/2022

HANDRAIL A AND E
NOT SYMMETRICAL

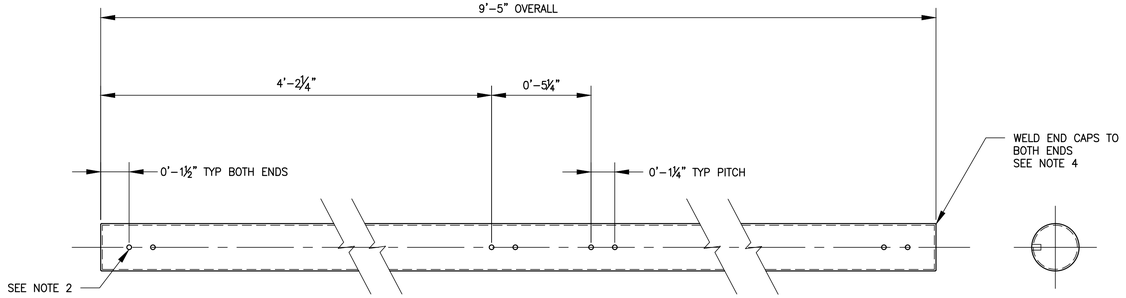

HANDRAIL D
NOT SYMMETRICAL

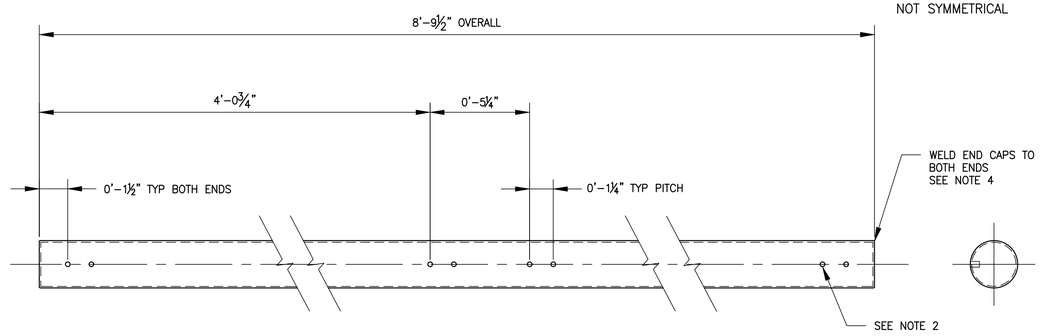

HANDRAIL B AND F
SYMMETRICAL

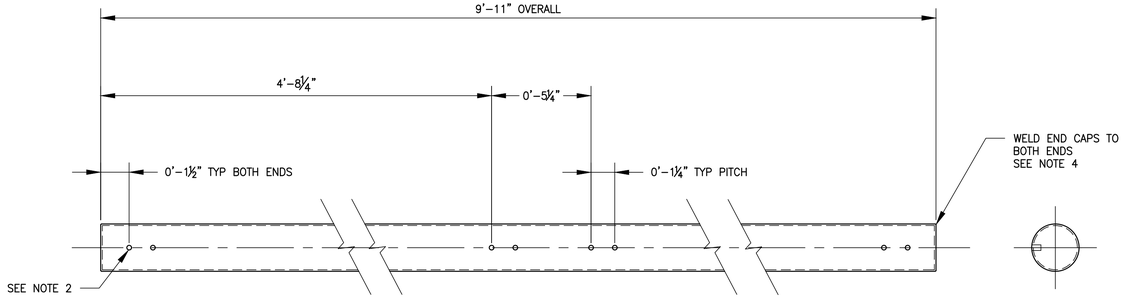

HANDRAIL C AND G
SYMMETRICAL

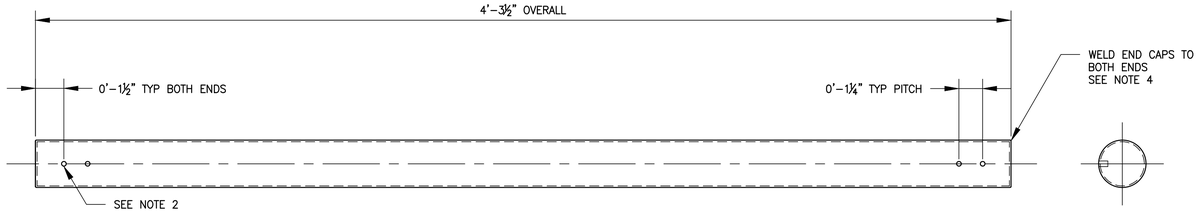

HANDRAIL DETAILS

FULL SIZE SCALE: 1" = 4"

NOTES

1. RAILING TO BE OWNER FURNISHED AND CONTRACTOR INSTALLED. SEE PROJECT SPECIFICATIONS.

CALL BEFORE YOU DIG 1-800-424-5555

NO.	REVISION COMMENTS	BY	REVIEW	DATE

DESIGNER | DRAWN BY | CHECKED BY

ROBERT P. DOHERTY
STATE OF WASHINGTON
43425
REGISTERED PROFESSIONAL ENGINEER
11/5/21

communitytransit
Swift ORANGE LINE - 100% SUBMITTAL
STATION SHELTER & AMENITIES INSTALLATION
HANDRAIL DETAILS

TITLE

Otak
11241 Willows Road NE, Suite 200
Redmond, WA 98052
425.822.4446
www.otak.com

32880.H
PROJECT NUMBER

S6.9
DRAWING NO.

SHEET 508 OF 622

© 2021 OTAK, INC.

Plotted: Nov 05, 2021 - 8:30pm K:\Project\32800\32880H\CADD\ACAD\Dwg\S6.9.dwg Layout Name: S6.9

SERVICE BREAKER SCHEDULE
STATION SHELTER

CIRCUIT	VOLTAGE	BREAKER	CONTACTOR
MAIN	120/240	1P–70 AMP	---
LIGHTING ICONIC MARKER	240	1P–20 AMP	30 AMP
LIGHTING STATION	240	1P–20 AMP	30 AMP
ILLUMINATED STATION SIGNAGE	240	1P–20 AMP	30 AMP
LIGHTING POST	240	1P–20 AMP	30 AMP
TICKET VENDING MACHINE LEFT	240	1P–20 AMP	---
TICKET VENDING MACHINE RIGHT	240	1P–20 AMP	---
ORCA SCANNERS	240	1P–20 AMP	---
RTPI DISPLAY	240	1P–20 AMP	---
IT EQUIPMENT & IT POWER STRIP	240	1P–20 AMP	---
FUTURE CCTV/POWER	240	1P–20 AMP	---
DIMMING EQUIPMENT	240	1P–20 AMP	---
GFCI RECEPTACLE	240	1P–20 AMP	---

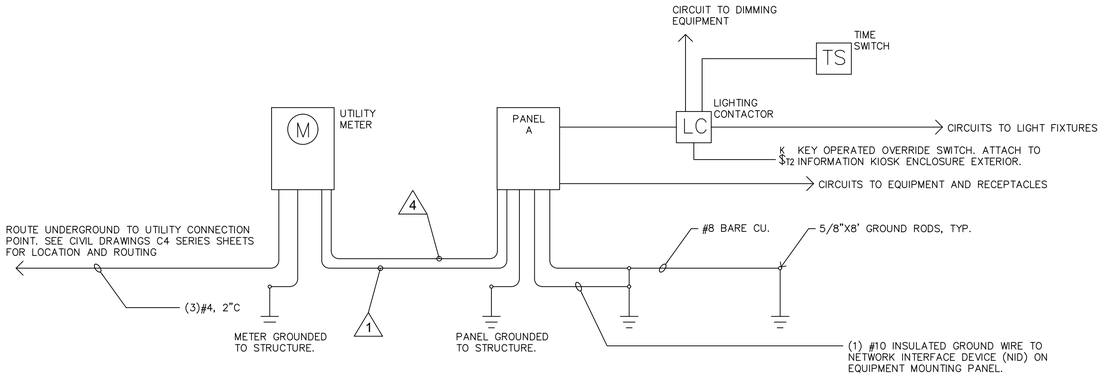

TYPICAL STATION SINGLE LINE POWER DIAGRAM
N.T.S.

CONSTRUCTION NOTES

1. PROVIDE 2"C FROM IT EQUIPMENT BOARD UNDERGROUND TO TELECOMMUNICATION SERVICE CONNECTION POINT. SEE CIVIL DRAWINGS C4 SERIES SHEETS FOR LOCATION AND ROUTE.
2. BRANCH CIRCUIT WIRING FROM PANEL A TO EQUIPMENT AND LIGHTING SHALL BE #12 COPPER INSTALLED IN CONDUIT. SEE PANEL SCHEDULE FOR CIRCUIT REQUIRMENTS.
3. TERMINATE CONDUITS AT UTILITY POINT TO COMPLY WITH UTILITY DESIGN STANDARDS.
4. CONTROL CIRCUITS 1 & 3 BY LIGHTING CONTACTOR.
5. CONNECT LIGHTING CONTACTOR TO OPERATE BY DIMMING CONTROL, CONNECTED IN SERIES WITH LOW VOLTAGE DEVICE AND DIGITAL TIME CLOCK, CONTACT #1, PARALLEL WITH KEY OPERATED OVERRIDE SWITCH, MOUNTED ON SIDE OF INFO PANEL.
6. CONNECT CIRCUIT 7 TO OPERATE BY TIME SWITCH CONTACT #2. (CONTACTS 3&4 SPARE).

PLAN NOTES

1. IN SERVICE (4:30AM TO 11:30PM)
   TIMESWITCH – OFF 1 HOUR AFTER SUNRISE AND ON 1 HOUR BEFORE SUNSET
2. NO SERVICE (11:30PM TO 4:30AM)
   TIME SWITCH – DIM ENCLOSED STATION LAMPS TO 50% OUTPUT, TURN ICONIC MARKER LIGHTS, ILLUMINATED STATION SIGNAGE AND POST LAMPS OFF

GENERAL NOTES

1. SEE C4 SERIES SHEETS FOR CONDUIT ROUTING DETAIL.

ABBREVIATIONS

OFCI: OWNER FURNISH CONTRACTOR INSTALLED

RTPI: REAL-TIME PASSENGER INFORMATION SIGN

GFCI: GROUND FAULT CIRCUIT INTERRUPT

LIGHTING FIXTURE SCHEDULE*						
ITEM	DESCRIPTION	LAMPS	TOTAL VA	MOUNTING	REMARKS	TRANSFORMER
3	POWERSTRIP LIGHTING	LED	167	INSIDE ICONIC MARKER		24V
6	POST LAMP	LED	36	SURFACE	2 TOTAL	
7	ENCLOSED STATION LAMPS	LED	696	SURFACE	116 LINEAR FEET	
13	8' ILLUMINATED STATION SIGNAGE	LED	171	SURFACE	2 TOTAL	
18	6' ILLUMINATED STATION SIGNAGE	LED	66	SURFACE	1 TOTAL	
19	CHANNEL MODULE LIGHTING	LED	202	INSIDE ICONIC MARKER CAP	180 MODULES	

*SEE SPECIFICATIONS FOR DETAILED INFORMATION

EQUIPMENT	QTY (PER STATION)	POWER	COMM	OWNER FURNISHED CONTRACTOR INSTALLED	CONTRACTOR FURNISHED & INSTALLED*	NOTES
TICKET VENDING MACHINE (TVM)	2	X		X		CONTRACTOR TO CONNECT POWER. VENDOR WILL DO COMMISSIONING.
STAND ALONE FAR TRANSACTION PROCESSOR (SAFTP) OR CARD READER/ORCA SCANNER	2	X	X	X		CONTRACTOR TO CONNECT POWER AND COMM. VENDOR WILL DO COMMISSIONING.
REAL TIME PASSENGER INFORMATION (RTPI) SIGNS (DOUBLE MOUNTED)	2	X	X	X		
ICONIC MARKER LIGHTING	1	X		X		
POWER METER	1	X			X	COORDINATE METER INSTALLATION WITH SNOHOMISH COUNTY PUD.
POST LAMP	2	X			X	
ENCLOSED STATION LAMP	116 LF	X		X		MEASURED IN LINEAR FEET.
LOAD CENTER	1	X			X	
8' ILLUMINATED STATION SIGNAGE	2	X		X		
ROUTER	1	X	X		X	
DIGITAL TIME CLOCK	1	X	X		X	
DIMMER	1	X			X	
LOW VOLTAGE DEVICE	1	X			X	
CAT5E DISCONNECT PANEL	1	X			X	
SURGE PROTECTOR (8 RECEPTACLES)	1	X			X	
24V TRANSFORMER	1	X			X	INSTALL ONE TRANSFORMER FOR THE ICONIC MARKER.
CAMERA (FUTURE)	2	X	X		X	LEAVE WIRES COILED IN THE MAIN BEAM.
NETWORK VIDEO RECORDER	1	X	X	X		POWER AND COMM FOR FUTURE INSTALLATION.
6' ILLUMINATED STATION SIGNAGE	1	X		X		
ANTENNA	1	X			X	

*CONTRACTOR SHALL CONFIRM MAKE/MODELS WITH COMMUNITY TRANSIT IT DEPARTMENT PRIOR TO ORDERING EQUIPMENT.

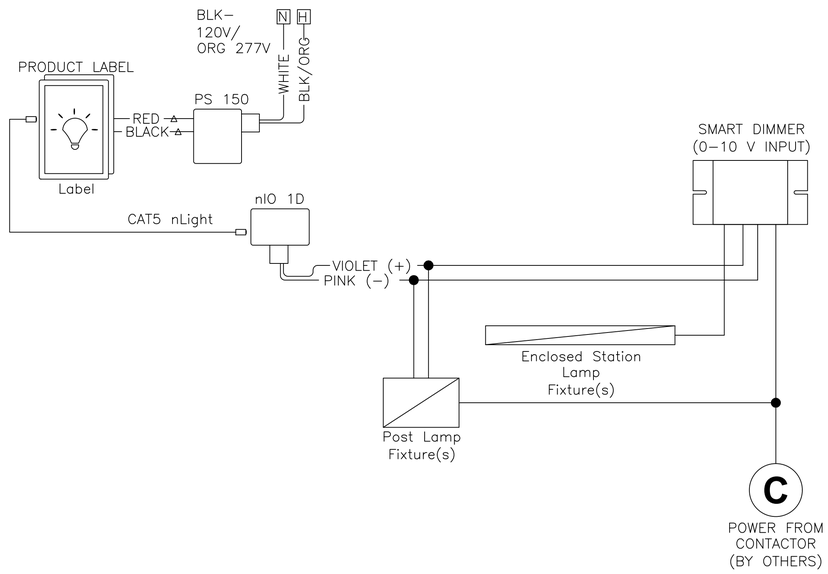

SWIFT STATION LIGHTING AND DIMMING CONTROL ONE–LINE
N.T.S.

TENW
Transportation Engineering NorthWest
Transportation Planning | Design | Traffic Impact & Operations
11400 SE 8th Street, Suite 200, Bellevue, WA 98004 | Office (425) 889-6747
Project Contact: Elyse Stemmler, P.E.
Phone: 425-250-5004

CALL BEFORE YOU DIG 1–800–424–5555

NO.	REVISION COMMENTS	BY	REVIEW	DATE

DESIGNER | DRAWN BY | CHECKED BY

1st Submittal, 3/22/2022

ELISE M. STEMMLER — STATE OF WASHINGTON — 52128 — REGISTERED PROFESSIONAL ENGINEER
09/29/21

community transit
Swift ORANGE LINE – 100% SUBMITTAL
STATION SHELTER ELECTRICAL PLANS
ELECTRICAL AND COMMUNICATION PLAN

TITLE

Otak
11241 Willows Road NE, Suite 200
Redmond, WA 98052
425.822.4446
www.otak.com

12345
PROJECT NUMBER

E1.2
DRAWING NO.

SHEET 510 OF 622

© 2018 OTAK, INC.

XREF_LIST

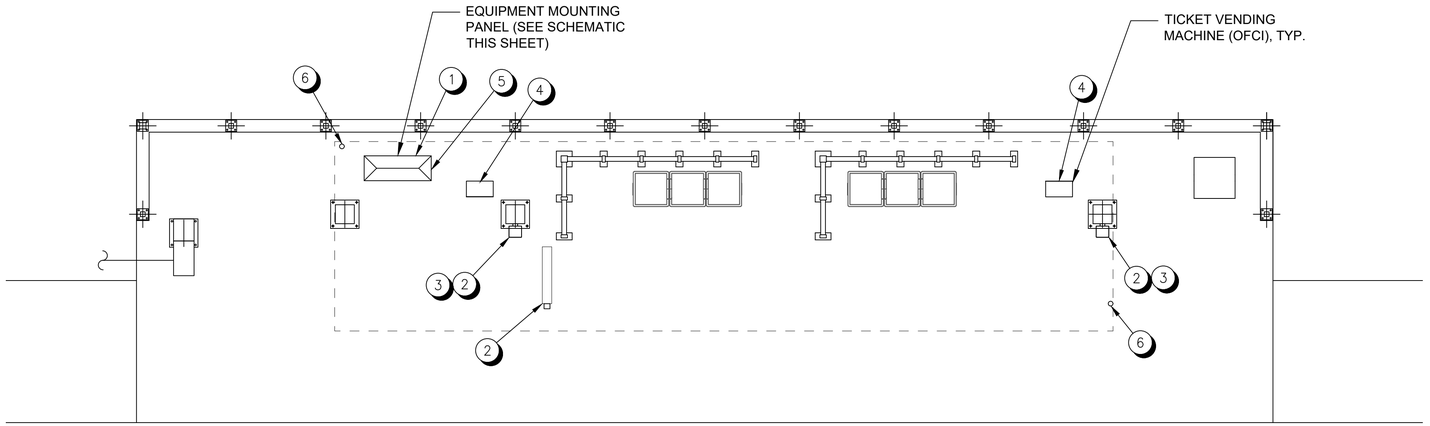

PLATFORM EQUIPMENT & COMMUNICATION PLAN (TYPICAL)

SCALE: 1/4"=1'-0"

0 2' 4' 8'

CONSTRUCTION NOTES

1. FROM EQUIPMENT MOUNTING PANEL, PULL TEN(10)-CAT5 CABLES INTO ADJACENT SHELTER. PULL TWO(2)-CAT5 CABLES TO EACH SAFTP CARD READER, TWO(2) CAT5 CABLES TO EACH CAMERA AND TWO(2)-CAT5 CABLES TO THE RTPI SIGN.
2. PROVIDE ONE(1)-CAT5e CABLE FOR CONNECTION TO EQUIPMENT. CABLE CONNECTIONS TO EQUIPMENT BY OTHERS.
3. INSTALL SAFTP CARD READER MOUNTING BRACKET ON SHELTER COLUMN. INSTALL TRANSFORMER IN BRACKET AND CONNECT TO POWER. MOUNTING BRACKET AND TRANSFORMER TO BE OFCI. FOR MOUNTING HEIGHT LOCATION, AND INSTALLATION DETAILS COORDINATE WITH COMMUNITY TRANSIT REPRESENTATIVE.
4. INSTALL TICKET VENDING MACHINE PER MANUFACTURER'S RECOMMENDATION AND CONNECT TO POWER. COORDINATE WORK WITH COMMUNITY TRANSIT REPRESENTATIVE.
5. FURNISH AND INSTALL ROUTER, SWITCH, CAT5e DISCONNECT PANEL, AND SURGE PROTECTOR. FURNISH AND INSTALL ALL CABLES AND CONNECTORS TO ACHIEVE OPERATION.
6. PROVIDE ONE(1)-CAT5e CABLE FOR CONNECTION TO EQUIPMENT. CABLE SHALL BE COILED IN MAIN BEAM FOR FUTURE USE.

GENERAL NOTES

1. SEE SHELTER AND AMENITIES INSTALLATION SHEET FOR BEAM DETAILS AND LOCATIONS.
2. SEE SHELTER AND AMENITIES INSTALLATION SHEETS FOR CABLE ACCESS INTO COLUMNS, AND TO EQUIPMENT (RTPI SIGN AND SAFTP CARD READERS).
3. SEE ELECTRICAL DRAWINGS FOR POWER INFORMATION.
4. SEE C4 SERIES SHEETS FOR CONDUIT ROUTING DETAIL.

ABBREVIATIONS

OFCI: OWNER FURNISH CONTRACTOR INSTALLED

RTPI: REAL-TIME PASSENGER INFORMATION SIGN

GFCI: GROUND FAULT CIRCUIT INTERRUPT

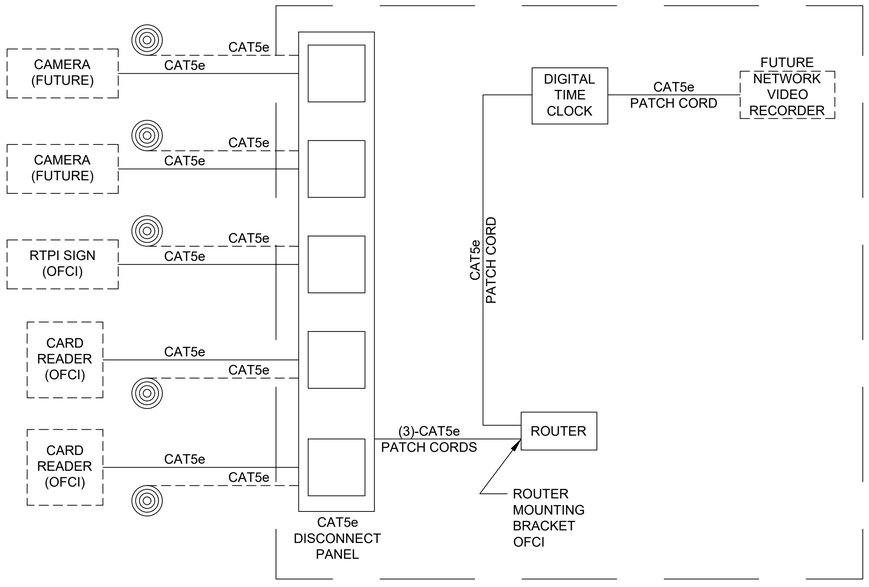

COMMUNICATIONS SCHEMATIC (TYPICAL)

N.T.S.

LEGEND	
ITEM	DESCRIPTION
	CABLE STORAGE AT EQUIPMENT INSTALLATION LOCATION
	EQUIPMENT FURNISHED BY OWNER AND INSTALLED BY CONTRACTOR
	CABLE STORAGE AT EQUIPMENT INSTALLATION LOCATION
	EQUIPMENT FURNISHED AND INSTALLED BY CONTRACTOR
	CABLING FURNISHED AND INSTALLED BY CONTRACTOR

NO.	REVISION COMMENTS	BY	REVIEW	DATE

DESIGNER

DRAWN BY

CHECKED BY

100% Submittal, April 3/22/2022

ELYSE M. STEMMLER — STATE OF WASHINGTON — 52128 — REGISTERED PROFESSIONAL ENGINEER

09/29/21

TENW
Transportation Engineering NorthWest

Transportation Planning | Design | Traffic Impact & Operations
11400 SE 8th Street, Suite 200, Bellevue, WA 98004 | Office (425) 889-6747

Project Contact: Elyse Stemmler, P.E.
Phone: 425-250-5004

CALL BEFORE YOU DIG 1-800-424-5555

communitytransit

Swift ORANGE LINE – 100% SUBMITTAL

STATION SHELTER ELECTRICAL PLANS
ELECTRICAL AND COMMUNICATION PLAN

TITLE

Otak

11241 Willows Road NE, Suite 200
Redmond, WA 98052
425.822.4446
www.otak.com

12345
PROJECT NUMBER

E1.3
DRAWING NO.

SHEET 511 OF 622

© 2018 OTAK, INC.

XREF_LIST

PDR-009731-2021

Lynnwood Edmonds College Terminus

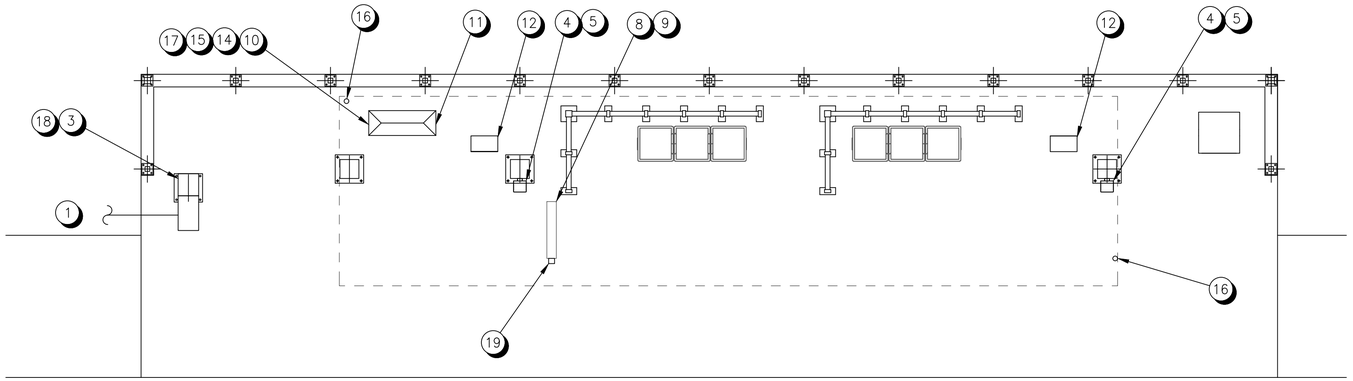

PLATFORM ELECTRICAL PLAN (TYPICAL)

SCALE: 1/4"=1'-0"

0 2' 4' 8'

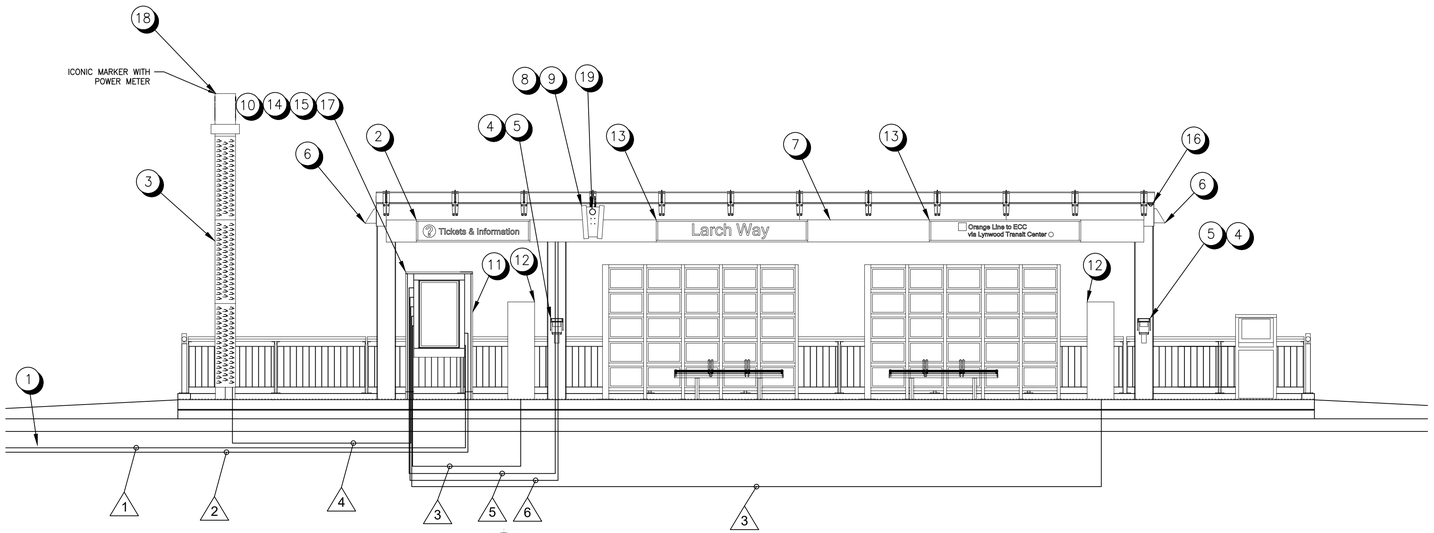

ELECTRICAL ELEVATION PLAN (TYPICAL)

SCALE: NONE

LEGEND		
ITEM	QUANTITY	DESCRIPTION
1	1	PUD Main power supply to shelter
2	1	6' Illuminated Station Signage - Power
3	1	Iconic Marker Lighting - Power
4	2	ORCA Scanner - Power - Provide Receptacle for cord/plug connection
5	2	ORCA Scanner - Data
6	2	Post Lamp - BEGA 33242 [in service] - Power
7	116 LF	Enclosed Station Lamp - BOCA FLASHER NANO-X - Power - LED LIGHTBAR*
8	1	RTPI Display - Data
9	1	RTPI Display - Power
10	1	IT Equipment Board - Scanner, RTPI and CCTV Data Distribution and Storage Center
		Provide 4 Outlet Power Strip and Connect to Panel A CKT.-6
11	1	Load Center Unit - Main Power Inlet Connection and Distribution Point (Panel A)
12	2	Ticket Machine - Power - Sub Surface Feed from Load Center to Ticket Machines
13	2	8' Illuminated Station Signage - Power
14	1	Dimming Equipment - Digital Time Clock, Dimmer, Low Voltage Device
15	1	GFCI Receptacle
16	2	Camera - Avigilon 3.0C-H4A-25GDO1-IR-B (Future)
17	2	Camera Equipment - ES-8 Port, Power Supply (Future)
18	1	Iconic Marker Cap Lighting - Power
19	1	Antenna - Chihuahua PRO ST Series

*MEASURED IN LINEAR FEET

GENERAL NOTES

1. SEE C4 SERIES SHEETS FOR CONDUIT ROUTING DETAIL.
2. SEE A1 SERIES SHEETS FOR ENCLOSED STATION LAMP LED LIGHT BAR STRIP LIGHTING CROSS-SECTION VIEW.
3. PUD MAIN POWER SUPPLY LOCATED IN THE CT ROOM ON LEVEL B1 FOR 185TH GARAGE. PUD METER LOCATED ON LEVEL 1 OF PARKING GARAGE.
4. PUD MAIN POWER SUPPLY AND METER LOCATED IN NEW RESTROOM FOR MCCOLLUM PARK AND EDMONDS COLLEGE TERMINI.
5. PUD MAIN POWER SUPPLY AND METER LOCATED IN CT RIDESTORE FOR LYNNWOOD TRANSIT CENTER.

ABBREVIATIONS

RTPI: REAL-TIME PASSENGER INFORMATION SIGN

GFCI: GROUND FAULT CIRCUIT INTERRUPT

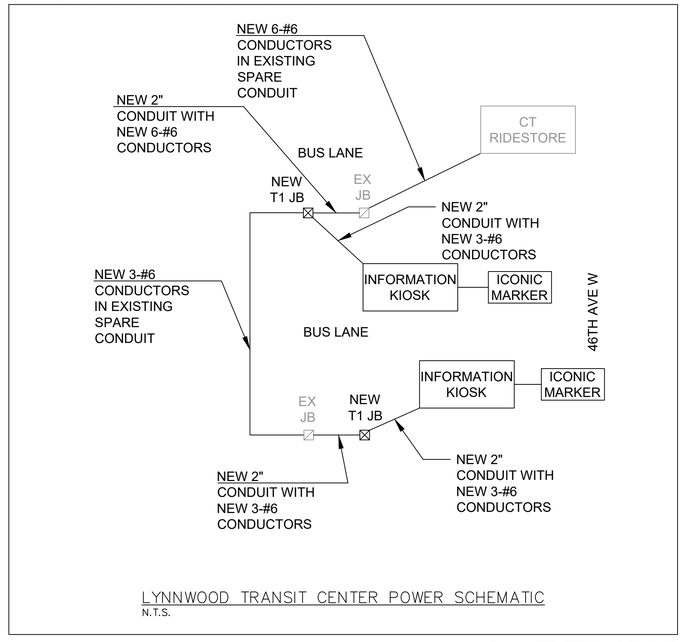

LYNNWOOD TRANSIT CENTER POWER SCHEMATIC

N.T.S.

CONDUIT SCHEDULE - 185TH GARAGE SHELTER		
Conduit	Conduit Diameter	Description
1	1.5"	Power to Info Kiosk
2	1.5"	Comm to Station
3	1"	Info Kiosk to Ticket Machine
4	1.5"	Power to Iconic Lights
5	1.5"	Comm to Shelter Equipment
6	1.5"	Power to Shelter Equipment

CONDUIT SCHEDULE - EDMONDS COLLEGE & MCCOLLUM PARK		
Conduit	Conduit Diameter	Description
1	2"	Power to Info Kiosk
2	2"	Comm to Station
3	1"	Info Kiosk to Ticket Machine
4	1.5"	Power to Iconic Lights
5	1.5"	Comm to Shelter Equipment
6	1.5"	Power to Shelter Equipment

CONDUIT SCHEDULE - LYNNWOOD TRANSIT CENTER		
Conduit	Conduit Diameter	Description
1	1.5"	Power to Info Kiosk
2	2"	Comm to Station
3	1"	Info Kiosk to Ticket Machine
4	1.5"	Power to Iconic Lights
5	1.5"	Comm to Shelter Equipment
6	1.5"	Power to Shelter Equipment

TENW
Transportation Engineering NorthWest
Transportation Planning | Design | Traffic Impact & Operations
11400 SE 8th Street, Suite 200, Bellevue, WA 98004 | Office (425) 889-6747
Project Contact: Elyse Stemmler, P.E.
Phone: 425-250-5004

CALL BEFORE YOU DIG 1-800-424-5555

NO.	REVISION COMMENTS	BY	REVIEW	DATE

DESIGNER

DRAWN BY

CHECKED BY

LLI Submittal, 3/22/2022

ELYSE M. STEMMLER, STATE OF WASHINGTON, No. 52128, REGISTERED PROFESSIONAL ENGINEER

09/29/21

communitytransit

Swift ORANGE LINE – 100% SUBMITTAL

STATION SHELTER ELECTRICAL PLANS
ELECTRICAL AND COMMUNICATION PLAN
185TH PARKING GARAGE, TERMINI, LYNNWOOD TRANSIT CENTER

TITLE

Otak
11241 Willows Road NE, Suite 200
Redmond, WA 98052
425.822.4446
www.otak.com

12345
PROJECT NUMBER

E1.4
DRAWING NO.

SHEET 512 OF 622

© 2018 OTAK, INC.

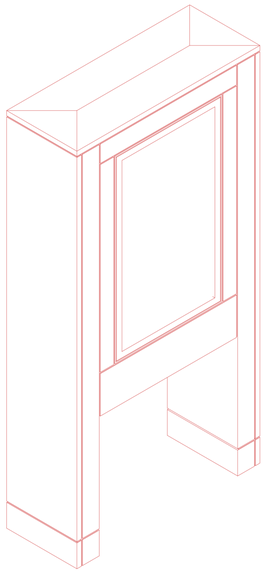

AXON – INFO KIOSK

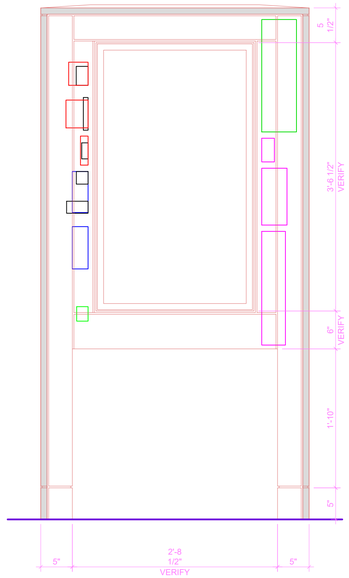

INFO KIOSK – FRONT ELEVATION

SCALE 1" = 1'-0"

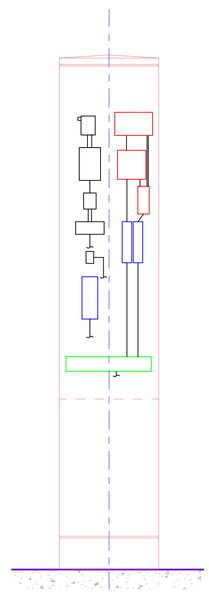

DEPARTURE SIDE – SECTION

SCALE 1" = 1'-0"

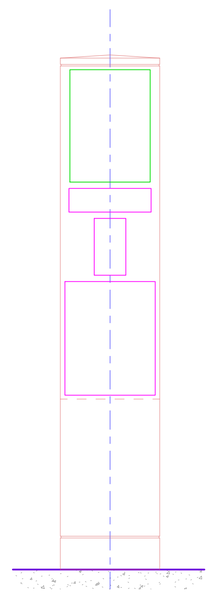

ARRIVAL SIDE – SECTION

SCALE 1" = 1'-0"

INFORMATION KIOSK EQUIPMENT LEGEND

EQUIPMENT	FRONT ELEVATION	SIDE ELEVATION
ROUTER (IT BOARD)	0.38 × 0.38	0.10 × 0.38
SWITCH (IT BOARD)	0.15 × 0.33	0.29 × 0.37
CAT5e DISCONNECT PANEL (IT BOARD)	0.50 × 0.31	0.26 × 0.31
LOAD CENTER UNIT	1.19 × 1.50	0.31 × 1.50
GFCI RECEPTACLE	1.13 × 0.19	0.15 × 0.19
TRANSFORMER & DISCONNECT SWITCH FOR INFO PANEL LIGHTING	0.21 × 0.13	0.54 × 0.13
TRANSFORMER & WIRING TO STATION ID PANEL LAMPS LIGHTING	0.56 × 0.21	0.21 × 0.21
TRANSFORMER & WIRING TO ICONIC MARKER	0.21 × 0.13	0.54 × 0.13
TIME SWITCH	1.06 × 1.48	0.46 × 1.48
KEY OPERATED OVERRIDE SWITCH	0.10 × 0.16	0.28 × 0.16
CAMERA/SPEAKER EQUIPMENT TO BE DETERMINED		
TOUCH SCREEN DIGITAL TIME CLOCK	0.28 × 0.43	0.06 × 0.43
SMART DIMMER	0.38 × 0.17	0.16 × 0.17
NIO 0-10V LOW VOLTAGE DEVICE	0.17 × 0.21	0.08 × 0.21
PS150 POWER SUPPLY	0.19 × 0.25	0.16 × 0.25
LIGHTING CONTACTOR	0.42 × 0.75	0.33 × 0.75
GUTTER	1.08 × 0.31	0.17 × 0.31

DESIGNER	DRAWN BY	CHECKED BY
XXX	XXX	XXX

NO.	REVISION COMMENTS	BY	REVIEW	DATE

ELISE M. STEMMLER
STATE OF WASHINGTON
52128
REGISTERED PROFESSIONAL ENGINEER

09/29/21

100% SUBMITTAL

communitytransit Swift ORANGE LINE

STATION SHELTER ELECTRICAL PLANS
INFO KIOSK EQUIPMENT LAYOUT

TITLE

Otak
11241 Willows Road NE, Suite 200
Redmond, WA 98052
425.822.4446
www.otak.com

32880.H
PROJECT NUMBER

E1.6
DRAWING NO.

SHEET 514 OF 622

© 2018 OTAK, INC.

SIGNAL AND ILLUMINATION GENERAL NOTES

1. CONTRACTOR SHALL CHECK FOR OVERHEAD CLEARANCE VERTICAL CLEARANCE REQUIREMENTS PER SIGNAL STANDARD DETAIL SHEETS FOR ALL SIGNAL HEADS ABOVE THE STREET PRIOR TO FOUNDATION EXCAVATION.

2. ALL TRAFFIC SIGNAL AND PEDESTRIAN HEADS AND PUSH BUTTONS SHALL BE SECURELY AND COMPLETELY COVERED WHILE NOT IN OPERATION.

3. THE JUNCTION BOX AND CONDUIT LOCATIONS SHOWN ARE APPROXIMATE. JUNCTION BOXES SHALL BE PLACED OUTSIDE OF PAVEMENT SURFACE AND WHEELCHAIR RAMPS UNLESS OTHERWISE INSTRUCTED BY THE ENGINEER.

4. ALL WORK SHALL BE IN ACCORDANCE WITH THESE PLANS AND THE STANDARDS AND SPECIFICATIONS OF THE CITY OF MILL CREEK/LYNNWOOD/SNOHOMISH COUNTY AND THE LATEST EDITION OF WSDOT STANDARDS AND SPECIFICATIONS. THE CURRENT EDITION OF THE CITY OF MILL CREEK/LYNNWOOD/SNOHOMISH COUNTY AND WSDOT STANDARD SPECIFICATIONS AND DETAILS SHALL BE CONSIDERED PART OF THIS CONTRACT. THE GOVERNING AGENCY FOR EACH INTERSECTION IMPROVEMENT IS DENOTED ON THE PLAN SHEETS. A SET OF APPROVED PLANS SHALL BE KEPT ON-SITE AT ALL TIMES DURING CONSTRUCTION.

5. THE LOCATIONS OF FEATURES SHOWN ARE APPROXIMATE AND SHALL BE VERIFIED IN THE FIELD BY THE CONTRACTOR AS NECESSARY.

6. THE CONTRACTOR SHALL SUBMIT A REQUEST TO THE INSPECTOR FOR MATERIALS APPROVAL A MINIMUM OF THREE WEEKS PRIOR TO REQUESTED APPROVAL DATE.

7. ALL WORK SHALL BE CONSISTENT WITH UTILITY AGENCY REQUIREMENTS. THE CONTRACTOR SHALL CONTACT ALL PERTINENT UTILITY AGENCIES 48 HOURS BEFORE COMMENCING WORK, AND SHALL COORDINATE WITH AFFECTED UTILITY AGENCIES THROUGHOUT THE PROJECT.

8. THE CONTRACTOR SHALL BE RESPONSIBLE FOR ANY DAMAGE TO EXISTING UTILITIES. THE CONTRACTOR SHALL NOTIFY THE AFFECTED UTILITY COMPANY AND THE CITY OF MILL CREEK/LYNNWOOD/SNOHOMISH COUNTY OR WSDOT IMMEDIATELY UPON DAMAGE.

9. EXISTING FEATURES TO REMAIN UNLESS OTHERWISE NOTED.

10. ALL CONDUCTORS FOR SIGNAL HEADS, LOOPS, PEDESTRIAN HEADS, PUSHBUTTONS, STREET LIGHTS AND FIBER OPTICS SHALL BE LABELED IN EACH JUNCTION BOX.

11. THE EXISTING DETECTION SYSTEM SHALL REMAIN OPERATIONAL UNTIL NEW DETECTION SYSTEM IS INSTALLED AND OPERATIONAL. IF DETECTION SYSTEM IS IMPACTED DURING CONSTRUCTION, CONTRACTOR SHALL COORDINATE WITH APPLICABLE AGENCY FOR TEMPORARY DETECTION REQUIREMENTS.

12. THE EXISTING ILLUMINATION SYSTEM SHALL REMAIN OPERATIONAL UNTIL THE NEW ILLUMINATION CONFIGURATION IS FULLY FUNCTIONAL.

13. ALL SIGNALIZED CROSSWALKS SHALL BE OPERATIONAL AT ALL TIMES UNLESS FLAGGERS/POLICE ARE PRESENT TO ASSIST PEDESTRIANS.

14. RETURN SALVAGED SIGNAL EQUIPMENT TO THE CITY, COUNTY OR WSDOT AS REQUESTED, INCLUDING TRAFFIC SIGNAL HEADS, TRAFFIC SIGNAL CONTROLLER CABINET, MAST ARM STREET NAME SIGNS, AND OTHER ITEMS AS REQUESTED. CONTRACTOR SHALL DISPOSE OF ITEMS NOT OTHERWISE NOTED.

15. CONTRACTOR SHALL PROVIDE ENGINEER WITH REDLINE MARKUPS SHOWING ANY AND ALL CHANGES FROM THESE APPROVED PLANS FOLLOWING CONSTRUCTION.

16. SIGNAL POLE BASE PLATES AND FACE OF PUSHBUTTONS SHALL ALIGN WITH THE BEARING OF THE CROSSWALK IT SERVES. FAILURE TO ORIENT POLES/BASE PLATES WITH THE CROSSWALK WILL REQUIRE THE FOUNDATION TO BE REMOVED AND RE-POURED BY THE CONTRACTOR. SEE CURB RAMP DETAIL SHEETS FOR ADDITIONAL DETAILS.

17. CITY OF LYNNWOOD DOES NOT HAVE PREFERRED METHOD OF EXCAVATION, UNLESS COST, PHASING OF WORK, OR CONFLICTS WITH EXISTING UNDERGROUND FEATURES INFLUENCES EXCAVATION METHOD. TRENCHING OR BORING IS ACCEPTABLE.

18. CITY OF MILL CREEK PREFERS WHICH EVER EXCAVATION APPROACH DOES NOT UNDULY IMPACT THE CITY'S RESIDENTS AND BUSINESSES. TRENCHING OR BORING IS ACCEPTABLE.

19. SNOHOMISH COUNTY PREFERS BORING OVER TRENCHING FOR METHOD OF EXCAVATION. FOR FURTHER EXCAVATION INFORMATION AND NOTES, SEE SNOHOMISH COUNTY ENGINEERING DESIGN AND DEVELOPMENT STANDARDS (EDDS) CHAPTERS 8 AND 9.

20. WSDOT PREFERS BORING OVER TRENCHING FOR METHOD OF EXCAVATION. ALL CONDUIT INSTALLATION UNDER EXISTING PAVEMENT SHALL BE BY DIRECTIONAL BORING. EXCEPTION BEING IF THERE IS PAVING PLANNED, THEN SAW CUTTING MAY BE ALLOWED. ADDITIONAL TRAFFIC CONTROL MAY ALSO BE REQUIRED FOR SAW CUTTING AND IT IS SUBJECT TO MAINTENANCE OF TRAFFIC ALLOWABLE HOURS OF CLOSURE.

21. TRAFFIC SIGNAL, ILLUMINATION AND INTERCONNECT CONDUIT SHALL BE PLACED SUCH THAT IT WILL NOT CONFLICT WITH FUTURE STREET TREE OR STRUCTURE INSTALLATIONS. VERIFY CONDUIT PLACEMENT WITH ENGINEER PRIOR TO BEGINNING CONSTRUCTION.

22. AS PART OF THE DESIGN PROCESS, THE ENGINEER HAS ATTEMPTED TO CONFIRM THAT THERE ARE NOT CONFLICTS WITH OVERHEAD POWER LINES OR SUBSURFACE UTILITIES. HOWEVER, IT IS POSSIBLE FOR THE EXISTING OR PROPOSED CONDITIONS TO CHANGE PRIOR TO IMPLEMENTATION OF THE SCOPE OF WORK IDENTIFIED ON THESE DOCUMENTS. AS THE FIRST ORDER OF BUSINESS, THE CONTRACTOR SHALL CONFIRM THAT THERE ARE NOT CONFLICTS WITH SUBSURFACE UTILITIES. ADDITIONALLY, THE CONTRACTOR SHALL CONFIRM THAT THERE IS A MINIMUM 10-FT CLEARANCE PROVIDED BETWEEN OVERHEAD POWER LINES AND THE PROPOSED LUMINAIRE AND SIGNAL POLES PRIOR TO POLE PLACEMENT. ADDITIONAL CLEARANCE MAY BE REQUIRED AS DIRECTED BY THE UTILITY. THE CONTRACTOR SHALL CONTACT THE ENGINEER IMMEDIATELY IF A CONFLICT IS DISCOVERED.

23. ALL FIBER OPTIC COMMUNICATIONS SHALL BE MAINTAINED. THE EXISTING FIBER OPTIC SYSTEM SHALL REMAIN OPERATIONAL UNTIL NEW FIBER OPTIC IS INSTALLED AND OPERATIONAL. IF FIBER OPTIC SYSTEM IS IMPACTED DURING CONSTRUCTION, CONTRACTOR SHALL COORDINATE WITH APPLICABLE AGENCY. DAMAGED FIBER OPTIC LINE MUST BE REPAIRED WITHIN 48 HOURS.

24. SNOHOMISH COUNTY FIBER INTERCONNECT IS IN THE SAME BOXES WITH THE SIGNAL CONDUCTORS.

25. FOR CONSTRUCTION IN CITY OF LYNNWOOD, COORDINATE WITH MIKE THOMAS, LEAD SIGNAL TECHNICIAN: 425-670-5236, MTHOMAS@LYNNWOODWA.GOV.

NO.	REVISION COMMENTS	BY	REVIEW	DATE

DESIGNER | DRAWN BY | CHECKED BY

ELYSE M. STEMMLER — STATE OF WASHINGTON — 52128 — REGISTERED PROFESSIONAL ENGINEER

09/29/21

communitytransit

Swift ORANGE LINE – 100% SUBMITTAL PLANS

STATION TRAFFIC SIGNAL AND ILLUMINATION PLANS

GENERAL NOTES

TITLE

TENW
Transportation Engineering NorthWest
Transportation Planning | Design | Traffic Impact & Operations
11400 SE 8th Street, Suite 200, Bellevue, WA 98004 | Office (425) 889-6747
Project Contact: Elyse Stemmler, P.E.
Phone: 425-250-5004

CALL BEFORE YOU DIG 1-800-424-5555

Otak
11241 Willows Road NE, Suite 200
Redmond, WA 98052
425.822.4446
www.otak.com

12345
PROJECT NUMBER

TS-0.00
DRAWING NO.

SHEET 515 OF 622

© 2018 OTAK, INC.

Lynnwood Edmonds College Terminus

HAWK SIGNAL SEQUENCE

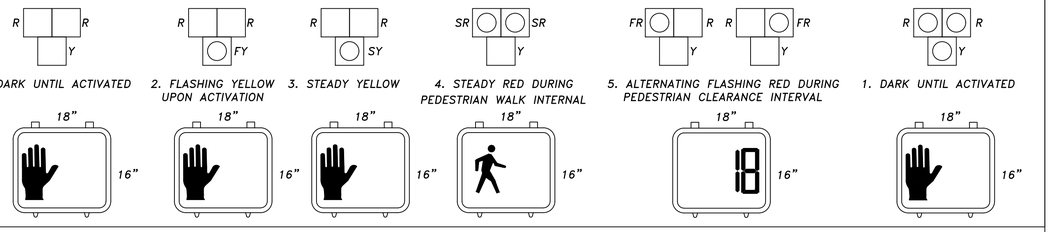

SIGNAL DISPLAYS FOR 68TH AVE W & 202ND PL SW



- ALL VEHICLE HEADS SHALL HAVE 12" LENSES, BACKPLATES, AND REFLECTIVE TAPE.
- VEHICLE SIGNAL HEADS SHALL USE TYPE M MOUNTS CONNECTED BETWEEN THE RED AND YELLOW SIGNAL FACE IN ORDER TO MAINTAIN 16.5-FT MINIMUM CLEARANCE FROM THE ROADWAY. SEE TABLE ON SHEET TS-1.41 FOR MINIMUM AND MAXIMUM SIGNAL HEAD CLEARANCES.
- VEHICLE HEADS ON TYPE III POLES SHALL USE TYPE H SIDE MOUNTS.
- PEDESTRIAN HEADS ON TYPE III POLES SHALL USE TYPE E CLAMSHELL MOUNTS.
- PEDESTRIAN HEADS ON TYPE FB POLES SHALL USE TYPE D TOP MOUNTS.
- ALL SIGNAL DISPLAYS USE TUNNEL VISORS.

EXISTING PHASE DIAGRAM

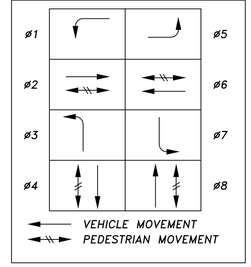

PRE-EMPTION SCHEDULE

A = ø2 & ø5
B = ø4 & ø7
C = ø1 & ø6
D = ø3 & ø8

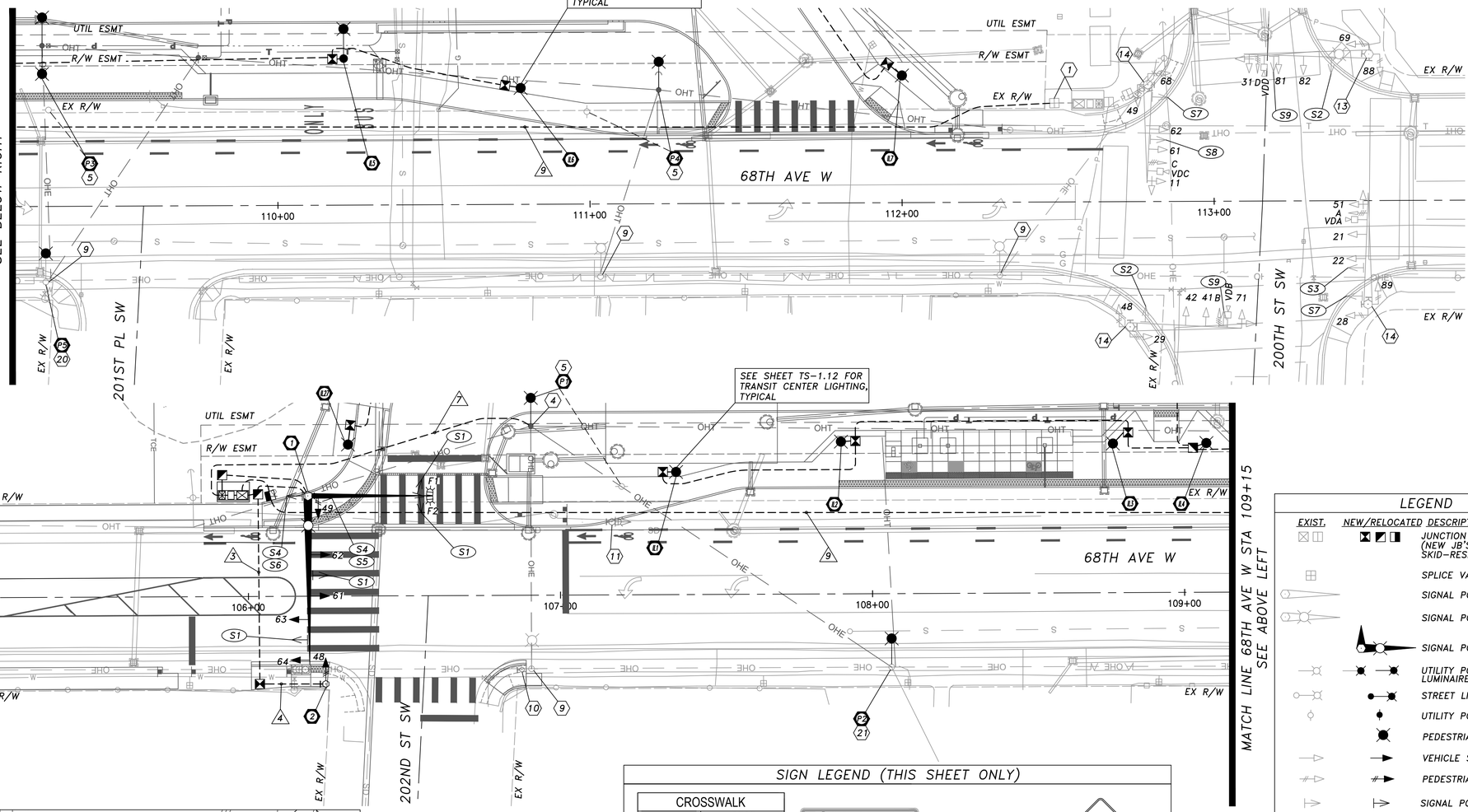

SIGNAL DISPLAYS FOR 68TH AVE W & 200TH ST SW

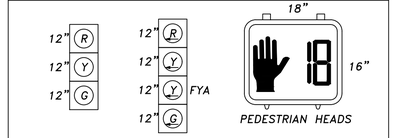

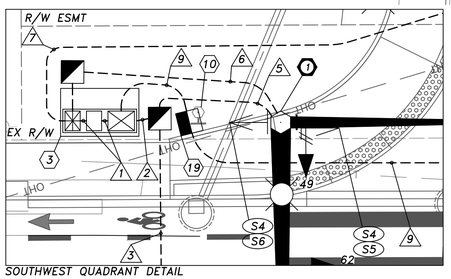

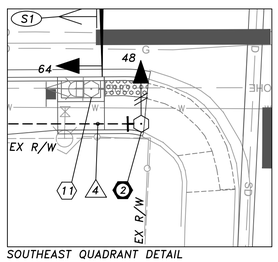

SIGN LEGEND (THIS SHEET ONLY)

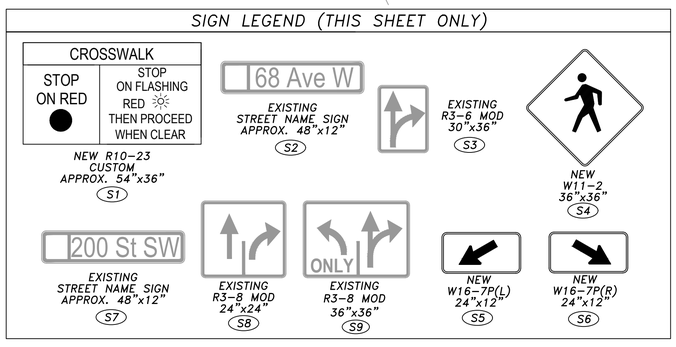

LEGEND

EXIST.	NEW/RELOCATED	DESCRIPTION
☒ ◫	◪ ◩ ◧	JUNCTION BOX TYPE 1,2,8 (NEW JB'S SHALL HAVE SKID-RESISTANT LIDS)
⊞		SPLICE VAULT
		SIGNAL POLE TYPE II
		SIGNAL POLE TYPE III
		SIGNAL POLE TYPE SD
		UTILITY POLE MOUNTED LUMINAIRE
		STREET LIGHT STANDARD
		UTILITY POLE
		PEDESTRIAN LIGHT STANDARD
		VEHICLE SIGNAL HEAD
		PEDESTRIAN SIGNAL HEAD
		SIGNAL POLE MOUNTED SIGN
		CONDUIT/CONDUCTOR
		CONTROLLER CABINET, UPS CABINET, SERVICE CABINET
⊙	⊙	TYPE 1, PPB, PS, FB POLE
⊦	⊦	PUSHBUTTON
⍾	⍾	FLASHING BEACON
	⬡	CONSTRUCTION NOTE
	△	WIRE NOTE
	⬭	SIGN NOTE
	⬡	SIGNAL/ILLUM POLE NUMBER

SEE SHEET TS-0.00 FOR:
- GENERAL NOTES

SEE SHEET TS-1.11 FOR:
- HAWK SIGNAL SEQUENCE
- SIGNAL DISPLAYS
- EXISTING PHASE DIAGRAM
- SIGN LEGEND

SEE SHEET TS-1.21 FOR:
- CONSTRUCTION NOTES
- WIRE SCHEDULE
- ILLUMINATION POLE SCHEDULE
- ILLUMINATION WIRING DIAGRAM

SEE SHEET TS-1.22 FOR:
- CURB RAMP DETAILS
- INTERCONNECT SCHEMATIC

SEE SHEET TS-1.31 FOR:
- SIGNAL WIRING DIAGRAM
- POLE 1 AND 2 DETAILS

SEE SHEET TS-1.41 FOR:
- SIGNAL STANDARD DETAIL CHART

SEE SHEET TS-1.51 – TS-1.53 FOR:
- PHOTOMETRIC CALCULATION SUMMARY

SCALE IN FEET
0 20 60
10 40

TENW
Transportation Engineering NorthWest
Transportation Planning | Design | Traffic Impact & Operations
11400 SE 8th Street, Suite 200, Bellevue, WA 98004 | Office (425) 889-6747
Project Contact: Elyse Stemmler, P.E.
Phone: 425-250-5004

CALL BEFORE YOU DIG 1-800-424-5555

NO.	REVISION COMMENTS	BY	REVIEW	DATE

DESIGNER | DRAWN BY | CHECKED BY

1st Submittal, 3/22/2022

ELYSE M. STEMMLER
STATE OF WASHINGTON
22128
REGISTERED PROFESSIONAL ENGINEER
09/29/21

JURISDICTION: CITY OF LYNNWOOD

communitytransit
Swift ORANGE LINE – 100% SUBMITTAL
TERMINI TRAFFIC SIGNAL AND ILLUMINATION PLANS
WESTERN TERMINUS - EDMONDS C (STATION # EB 3221 & WB 3222)
EDMONDS C, PLAN VIEW

TITLE

Otak
11241 Willows Road NE, Suite 200
Redmond, WA 98052
425.822.4446
www.otak.com

12345
PROJECT NUMBER

TS-1.11
DRAWING NO.

SHEET 516 OF 622

© 2018 OTAK, INC.

Plotted: Sep 24, 2021 - 11:27am A:\Active Projects\Swift Orange Line BRT - 5840, 2020-35\Design - 2020-35\Deliverables\2021-XX-XX Next Submittal\CAD\Sites 1-4 Edmonds Community\ECC Master Signal.dwg Layout Name: TS-1.11

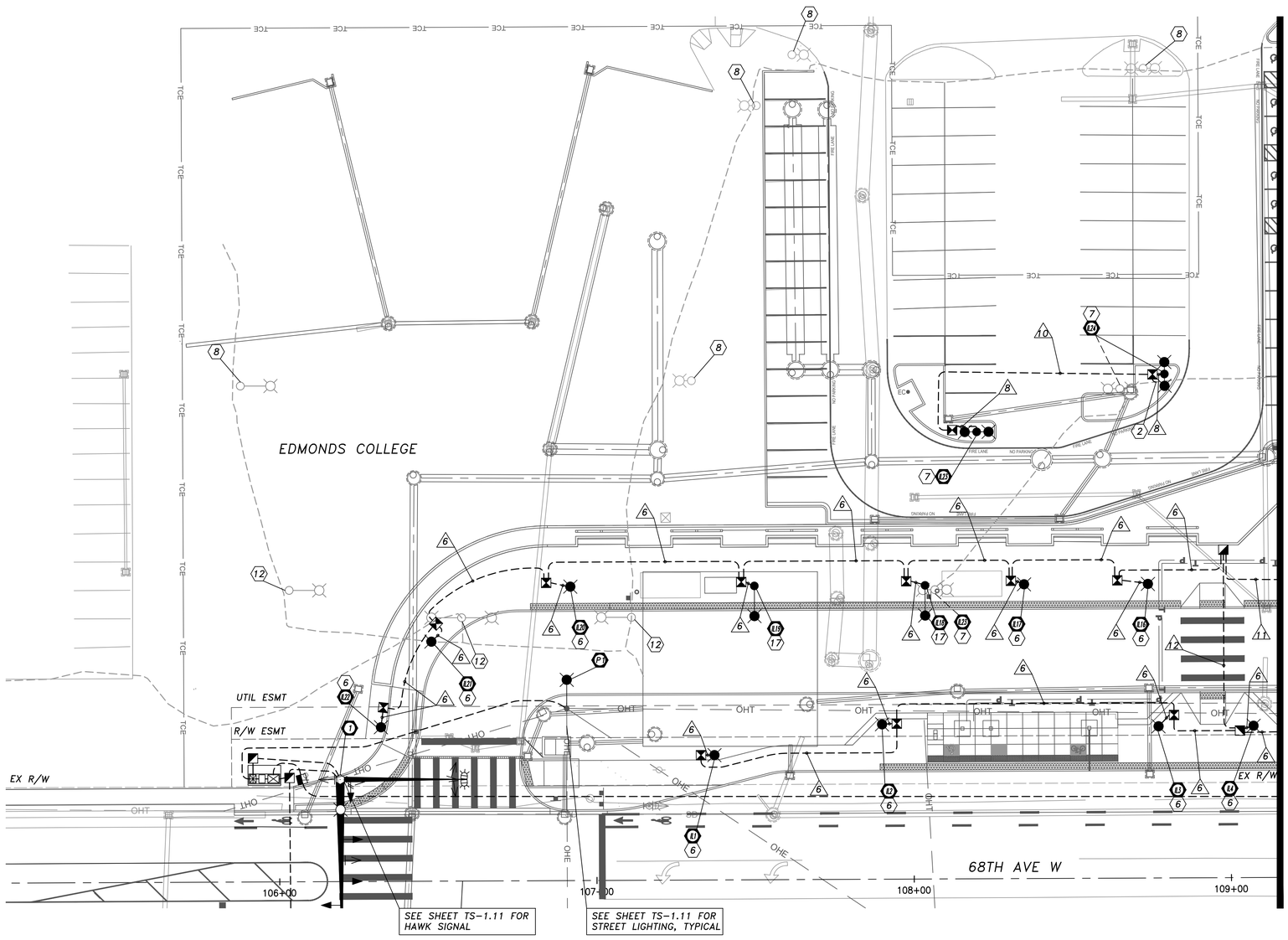

LEGEND

EXIST.	NEW/RELOCATED	DESCRIPTION
☒ ◫	◪ ◧	JUNCTION BOX TYPE 1,2,8 (NEW JB'S SHALL HAVE SKID-RESISTANT LIDS)
	⊞	SPLICE VAULT
		SIGNAL POLE TYPE II
		SIGNAL POLE TYPE III
		SIGNAL POLE TYPE SD
	○	UTILITY POLE MOUNTED LUMINAIRE
		STREET LIGHT STANDARD
		UTILITY POLE
		PEDESTRIAN LIGHT STANDARD
		VEHICLE SIGNAL HEAD
		PEDESTRIAN SIGNAL HEAD
		SIGNAL POLE MOUNTED SIGN
		CONDUIT/CONDUCTOR
		CONTROLLER CABINET UPS CABINET SERVICE CABINET
	⊙	TYPE 1, PPB, PS, FB POLE
		PUSHBUTTON
		FLASHING BEACON
		CONSTRUCTION NOTE
		WIRE NOTE
		SIGN NOTE
		SIGNAL/ILLUM POLE NUMBER

SEE SHEET TS-0.00 FOR:
- GENERAL NOTES

SEE SHEET TS-1.11 FOR:
- HAWK SIGNAL SEQUENCE
- SIGNAL DISPLAYS
- EXISTING PHASE DIAGRAM
- SIGN LEGEND

SEE SHEET TS-1.21 FOR:
- CONSTRUCTION NOTES
- WIRE SCHEDULE
- ILLUMINATION POLE SCHEDULE
- ILLUMINATION WIRING DIAGRAM

SEE SHEET TS-1.22 FOR:
- CURB RAMP DETAILS
- INTERCONNECT SCHEMATIC

SEE SHEET TS-1.31 FOR:
- SIGNAL WIRING DIAGRAM
- POLE 1 AND 2 DETAILS

SEE SHEET TS-1.41 FOR:
- SIGNAL STANDARD DETAIL CHART

SEE SHEET TS-1.51 – TS-1.53 FOR:
- PHOTOMETRIC CALCULATION SUMMARY

0 20 40 60
SCALE IN FEET

TENW
Transportation Engineering NorthWest
Transportation Planning | Design | Traffic Impact & Operations
11400 SE 8th Street, Suite 200, Bellevue, WA 98004 | Office (425) 889-6747
Project Contact: Elyse Stemmler, P.E.
Phone: 425-250-5004

CALL BEFORE YOU DIG 1-800-424-5555

NO.	REVISION COMMENTS	BY	REVIEW	DATE

DESIGNER | DRAWN BY | CHECKED BY

1st Submittal, 3/22/2022

ELYSE M. STEMMLER
STATE OF WASHINGTON
REGISTERED PROFESSIONAL ENGINEER
No. 52128
09/29/21

JURISDICTION:
CITY OF LYNNWOOD

communitytransit
Swift ORANGE LINE – 100% SUBMITTAL
TERMINI TRAFFIC SIGNAL AND ILLUMINATION PLANS
WESTERN TERMINUS - EDMONDS C (STATION # EB 3221 & WB 3222)
EDMONDS C, PLAN VIEW

TITLE

Otak
11241 Willows Road NE, Suite 200
Redmond, WA 98052
425.822.4446
www.otak.com

12345
PROJECT NUMBER

TS-1.12
DRAWING NO.

SHEET 517 OF 622

© 2018 OTAK, INC.

Plotted: Sep 24, 2021 - 11:27am A:\Active Projects\Swift Orange Line BRT - 5840, 2020-35\Design - 2020-35\Deliverables\2021-XX-XX Next Submittal\CAD\Sites 1-4 Edmonds Community\ECC Master Signal.dwg Layout Name: TS-1.12

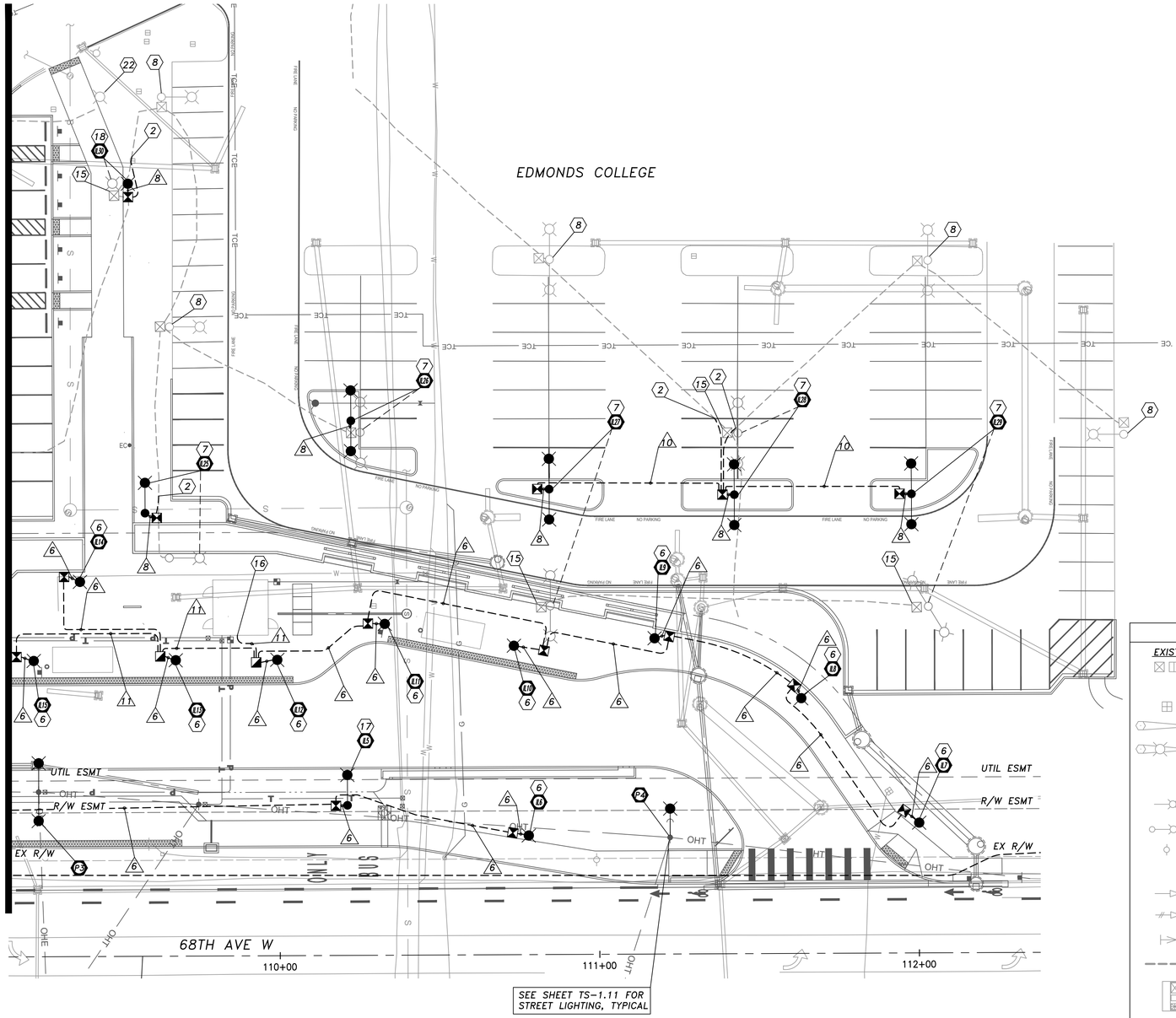

LEGEND

EXIST.	NEW/RELOCATED	DESCRIPTION
		JUNCTION BOX TYPE 1,2,8 (NEW JB'S SHALL HAVE SKID-RESISTANT LIDS)
		SPLICE VAULT
		SIGNAL POLE TYPE II
		SIGNAL POLE TYPE III
		SIGNAL POLE TYPE SD
		UTILITY POLE MOUNTED LUMINAIRE
		STREET LIGHT STANDARD
		UTILITY POLE
		PEDESTRIAN LIGHT STANDARD
		VEHICLE SIGNAL HEAD
		PEDESTRIAN SIGNAL HEAD
		SIGNAL POLE MOUNTED SIGN
		CONDUIT/CONDUCTOR
		CONTROLLER CABINET UPS CABINET SERVICE CABINET
		TYPE 1, PPB, PS, FB POLE
		PUSHBUTTON
		FLASHING BEACON
		CONSTRUCTION NOTE
		WIRE NOTE
		SIGN NOTE
		SIGNAL/ILLUM POLE NUMBER

SEE SHEET TS-0.00 FOR:
- GENERAL NOTES

SEE SHEET TS-1.11 FOR:
- HAWK SIGNAL SEQUENCE
- SIGNAL DISPLAYS
- EXISTING PHASE DIAGRAM
- SIGN LEGEND

SEE SHEET TS-1.21 FOR:
- CONSTRUCTION NOTES
- WIRE SCHEDULE
- ILLUMINATION POLE SCHEDULE
- ILLUMINATION WIRING DIAGRAM

SEE SHEET TS-1.22 FOR:
- CURB RAMP DETAILS
- INTERCONNECT SCHEMATIC

SEE SHEET TS-1.31 FOR:
- SIGNAL WIRING DIAGRAM
- POLE 1 AND 2 DETAILS

SEE SHEET TS-1.41 FOR:
- SIGNAL STANDARD DETAIL CHART

SEE SHEET TS-1.51 – TS-1.53 FOR:
- PHOTOMETRIC CALCULATION SUMMARY

10 40
0 20 60
SCALE IN FEET

TENW
Transportation Engineering NorthWest
Transportation Planning | Design | Traffic Impact & Operations
11400 SE 8th Street, Suite 200, Bellevue, WA 98004 | Office (425) 889-6747
Project Contact: Elyse Stemmler, P.E.
Phone: 425-250-5004

CALL BEFORE YOU DIG 1-800-424-5555

NO.	REVISION COMMENTS	BY	REVIEW	DATE

DESIGNER | DRAWN BY | CHECKED BY

ELYSE M. STEMMLER
STATE OF WASHINGTON
No. 56128
REGISTERED PROFESSIONAL ENGINEER
09/29/21

JURISDICTION:
CITY OF LYNNWOOD

communitytransit
Swift ORANGE LINE – 100% SUBMITTAL
TERMINI TRAFFIC SIGNAL AND ILLUMINATION PLANS
WESTERN TERMINUS - EDMONDS C (STATION # EB 3221 & WB 3222)
EDMONDS C, PLAN VIEW

TITLE

Otak
11241 Willows Road NE, Suite 200
Redmond, WA 98052
425.822.4446
www.otak.com

12345
PROJECT NUMBER

TS-1.13
DRAWING NO.

SHEET 518 OF 622

© 2018 OTAK, INC.

Plotted: Sep 24, 2021 - 11:27am A:\Active Projects\Swift Orange Line BRT - 5840\ 2020-35\Design - 2020-35\Deliverables\2021-XX-XX Next Submittal\CAD\Sites 1-4 Edmonds Community\ECC Master Signal.dwg Layout Name: TS-1.13

PDR-009731-2021

Lynnwood Edmonds College Terminus

3rd Submittal, Rcvd 3/22/2022

SIGNAL WIRING SCHEDULE

NO.	RACEWAY CONDUIT SIZE	ILLUM #10	ILLUM #8	PED HEAD/PPB 5C	VEH HEAD 5C	FLASHER 5C	CONT. PWR #6	SVC PWR #2	FIBER 12SMFO	PULL WIRE	EQUIP. GRND. *	CONDUIT FILL	ALLOW. FILL (26%)
1	2" SCH40 PVC						2				1	0.22	0.86
2	3" SCH40 PVC			2	1	1					1	0.70	1.89
3	2" SCH80 PVC			1							1	0.28	0.75
	2" SCH80 PVC SPARE									1		---	---
4	2" SCH40 PVC			1							1	0.28	0.86
5	2" SCH40 PVC			1	1	1					1	0.56	0.86
6	2" SCH40 PVC		2								1	0.17	0.86
7	2" SCH80 PVC							3				0.40	0.75
8	1" SCH40 PVC	2 EX									1 EX	0.10	0.22
9	2" SCH80 PVC								1		1	0.39	0.75
	2" SCH80 PVC SPARE									1		---	0.75
10	1" SCH80 PVC	2									1	0.10	0.18
11	2" SCH40 PVC		4								1	0.28	0.86
12	2" SCH80 PVC		2								1	0.17	0.75

* GROUND WIRE SIZE SHALL MATCH THE LARGEST CONDUCTOR (MIN. 8 AWG).

ILLUMINATION POLE SCHEDULE

LUM. POLE NO.	STREET	STATION	OFFSET	MOUNT. HEIGHT	ARM LENGTH	SVC CIRCUIT	WATTAGE /TYPE	INITIAL LUMENS	LUMINAIRE TYPE – DISTRIBUTION	POLE TYPE	BASE	COMMENT
P1	68TH AVE W	106+90.5	54.0' LT	30'	8'	–	105 LED	12,748	AEL ATB0 ATB0–30BLEDE10–R3–4K	–	–	UTILITY POLE MOUNTED LUMINAIRE.
P2	68TH AVE W	108+06.0	23.5' RT	30'	8'	–	105 LED	12,748	AEL ATB0 ATB0–30BLEDE10–R3–4K	–	–	UTILITY POLE MOUNTED LUMINAIRE.
P3	68TH AVE W	109+24.5	51.5' LT	30'	8' / 8'	–	105 LED / 48 LED	12,748 / 5,179	AEL ATB0–30BLEDE10–R3–4K / AEL ATB0–20BLEDE70–R3–4K	–	–	UTILITY POLE MOUNTED DUAL ARM LUMINAIRE. MOUNT 105W LUMINAIRE FACING WEST, 48W LUMINAIRE FACING EAST.
P4	68TH AVE W	111+22.0	36.5' LT	30'	8'	–	105 LED	12,748	AEL ATB0 ATB0–30BLEDE10–R3–4K	–	–	UTILITY POLE MOUNTED LUMINAIRE.
P5	68TH AVE W	109+25.5	24.0' RT	EX 30'	EX 6'	–	143 LED	12,206	LEOTEK GC1 GC1–40F–MV–NW–3–GY–1000	–	–	REPLACE EXISTING UTILITY POLE MOUNTED LUMINAIRE.
IL1	68TH AVE W	107+37.0	39.5' LT	12'	–	A	45 LED	3,032	LUMINIS ECLIPSE MINI EC603–L1W48–R5	ROUND TAPER STEEL	FIXED	PEDESTRIAN SCALE LUMINAIRE WITH ACUITY MOTION SENSOR.
IL2	68TH AVE W	107+90.0	49.0' LT	12'	–	A	45 LED	3,032	LUMINIS ECLIPSE MINI EC603–L1W48–R5	ROUND TAPER STEEL	FIXED	PEDESTRIAN SCALE LUMINAIRE WITH ACUITY MOTION SENSOR.
IL3	68TH AVE W	108+77.0	48.0' LT	12'	–	A	45 LED	3,032	LUMINIS ECLIPSE MINI EC603–L1W48–R5	ROUND TAPER STEEL	FIXED	PEDESTRIAN SCALE LUMINAIRE WITH ACUITY MOTION SENSOR.
IL4	68TH AVE W	109+07.0	48.0' LT	12'	–	A	45 LED	3,032	LUMINIS ECLIPSE MINI EC603–L1W48–R5	ROUND TAPER STEEL	FIXED	PEDESTRIAN SCALE LUMINAIRE WITH ACUITY MOTION SENSOR.
IL5	68TH AVE W	110+21.0	47.0' LT	40'	2'	A	185 LED	24,066	LITHONIA DSX2 DSX2–P2–40K–T3S–MVOLT	SQUARE CONRETE	FIXED	STREET LIGHT POLE WITH ACUITY MOTION SENSOR.
IL6	68TH AVE W	110+78.0	37.5' LT	12'	–	A	45 LED	3,032	LUMINIS ECLIPSE MINI EC603–L1W48–R5	ROUND TAPER STEEL	FIXED	PEDESTRIAN SCALE LUMINAIRE WITH ACUITY MOTION SENSOR.
IL7	68TH AVE W	112+00.0	41.0' LT	12'	–	A	45 LED	3,032	LUMINIS ECLIPSE MINI EC603–L1W48–R5	ROUND TAPER STEEL	FIXED	PEDESTRIAN SCALE LUMINAIRE WITH ACUITY MOTION SENSOR.
IL8	68TH AVE W	111+63.5	80.0' LT	12'	–	A	45 LED	3,032	LUMINIS ECLIPSE MINI EC603–L1W48–R5	ROUND TAPER STEEL	FIXED	PEDESTRIAN SCALE LUMINAIRE WITH ACUITY MOTION SENSOR.
IL9	68TH AVE W	111+17.5	99.0' LT	12'	–	A	45 LED	3,032	LUMINIS ECLIPSE MINI EC603–L1W48–R5	ROUND TAPER STEEL	FIXED	PEDESTRIAN SCALE LUMINAIRE WITH ACUITY MOTION SENSOR.
IL10	68TH AVE W	110+73.5	96.5' LT	12'	–	A	45 LED	3,032	LUMINIS ECLIPSE MINI EC603–L1W48–R5	ROUND TAPER STEEL	FIXED	PEDESTRIAN SCALE LUMINAIRE WITH ACUITY MOTION SENSOR.
IL11	68TH AVE W	110+33.0	103.5' LT	12'	–	A	45 LED	3,032	LUMINIS ECLIPSE MINI EC603–L1W48–R5	ROUND TAPER STEEL	FIXED	PEDESTRIAN SCALE LUMINAIRE WITH ACUITY MOTION SENSOR.
IL12	68TH AVE W	109+99.5	92.5' LT	12'	–	A	45 LED	3,032	LUMINIS ECLIPSE MINI EC603–L1W48–R5	ROUND TAPER STEEL	FIXED	PEDESTRIAN SCALE LUMINAIRE WITH ACUITY MOTION SENSOR.
IL13	68TH AVE W	109+67.5	92.5' LT	12'	–	A	45 LED	3,032	LUMINIS ECLIPSE MINI EC603–L1W48–R5	ROUND TAPER STEEL	FIXED	PEDESTRIAN SCALE LUMINAIRE WITH ACUITY MOTION SENSOR.
IL14	68TH AVE W	109+38.0	117.5' LT	12'	–	A	45 LED	3,032	LUMINIS ECLIPSE MINI EC603–L1W48–R5	ROUND TAPER STEEL	FIXED	PEDESTRIAN SCALE LUMINAIRE WITH ACUITY MOTION SENSOR.
IL15	68TH AVE W	109+23.5	92.5' LT	12'	–	A	45 LED	3,032	LUMINIS ECLIPSE MINI EC603–L1W48–R5	ROUND TAPER STEEL	FIXED	PEDESTRIAN SCALE LUMINAIRE WITH ACUITY MOTION SENSOR.
IL16	68TH AVE W	108+74.0	92.5' LT	12'	–	B	45 LED	3,032	LUMINIS ECLIPSE MINI EC603–L1W48–R5	ROUND TAPER STEEL	FIXED	PEDESTRIAN SCALE LUMINAIRE WITH ACUITY MOTION SENSOR.
IL17	68TH AVE W	108+35.0	92.5' LT	12'	–	B	45 LED	3,032	LUMINIS ECLIPSE MINI EC603–L1W48–R5	ROUND TAPER STEEL	FIXED	PEDESTRIAN SCALE LUMINAIRE WITH ACUITY MOTION SENSOR.
IL18	68TH AVE W	108+04.0	92.5' LT	40'	2'	B	140 LED	18,963	LITHONIA DSX2 DSX2–P1–40K–T3S–MVOLT	SQUARE CONCRETE	FIXED	STREET LIGHT POLE WITH ACUITY MOTION SENSOR.
IL19	68TH AVE W	107+50.0	92.5' LT	40'	2'	B	140 LED	18,963	LITHONIA DSX2 DSX2–P1–40K–T3S–MVOLT	SQUARE CONCRETE	FIXED	STREET LIGHT POLE WITH ACUITY MOTION SENSOR.
IL20	68TH AVE W	106+92.0	92.5' LT	12'	–	B	45 LED	3,032	LUMINIS ECLIPSE MINI EC603–L1W48–R5	ROUND TAPER STEEL	FIXED	PEDESTRIAN SCALE LUMINAIRE WITH ACUITY MOTION SENSOR.
IL21	68TH AVE W	106+48.0	75.5' LT	12'	–	B	45 LED	3,032	LUMINIS ECLIPSE MINI EC603–L1W48–R5	ROUND TAPER STEEL	FIXED	PEDESTRIAN SCALE LUMINAIRE WITH ACUITY MOTION SENSOR.
IL22	68TH AVE W	106+32.0	48.5' LT	12'	–	B	45 LED	3,032	LUMINIS ECLIPSE MINI EC603–L1W48–R5	ROUND TAPER STEEL	FIXED	PEDESTRIAN SCALE LUMINAIRE WITH ACUITY MOTION SENSOR.
IL23	---	301351.08*	1273922.18**	EX	EX	EX	EX LED	EX	EXISTING	EX	FIXED	RELOCATED PARKING LOT LUMINAIRE.
IL24	---	301410.26*	1273903.94**	EX	EX	EX	EX LED	EX	EXISTING	EX	FIXED	RELOCATED PARKING LOT LUMINAIRE.
IL25	---	301489.11*	1273923.69**	EX	EX	EX	EX LED	EX	EXISTING	EX	FIXED	RELOCATED PARKING LOT LUMINAIRE.
IL26	---	301553.50*	1273894.77**	EX	EX	EX	EX LED	EX	EXISTING	EX	FIXED	RELOCATED PARKING LOT LUMINAIRE.
IL27	---	301615.54*	1273916.16**	EX	EX	EX	EX LED	EX	EXISTING	EX	FIXED	RELOCATED PARKING LOT LUMINAIRE.
IL28	---	301673.48*	1273917.89**	EX	EX	EX	EX LED	EX	EXISTING	EX	FIXED	RELOCATED PARKING LOT LUMINAIRE.
IL29	---	301728.90*	1273917.63**	EX	EX	EX	EX LED	EX	EXISTING	EX	FIXED	RELOCATED PARKING LOT LUMINAIRE.
IL30	---	301483.72*	1273820.59**	EX	EX	EX	EX LED	EX	EXISTING	EX	FIXED	RELOCATED PEDESTRIAN SCALE LUMINAIRE.

* NORTHING

** EASTING

SIGNAL AND ILLUMINATION CONSTRUCTION NOTES

(1) CONSTRUCT FOUNDATION PER WSDOT STANDARD PLAN J–26.10. FURNISH AND INSTALL NEW TYPE SD DUAL MAST ARM SIGNAL POLE WITH FOUR NEW VEHICLE SIGNAL HEADS, TWO NEW R10–23 CUSTOM "STOP ON FLASHING RED; THEN PROCEED WHEN CLEAR" SIGNS ON THE 68TH AVE W MAST ARM AND TWO NEW 12" FLASHING RED BEACONS AND TWO NEW R10–23 CUSTOM "STOP ON FLASHING RED; THEN PROCEED WHEN CLEAR" SIGNS ON THE 202ND ST SW MAST ARM. FURNISH AND INSTALL TWO NEW W11–2 SIGNS WITH ASSOCIATED W16–7P SIGNS BELOW ON THE SIGNAL POLE. ONE W11–2 SIGN WITH ASSOCIATED W16–7P SIGN SHALL FACE NORTH AND ONE W11–2 SIGN WITH ASSOCIATED W16–7P SIGN SHALL FACE SOUTH. FURNISH AND INSTALL ONE NEW PEDESTRIAN SIGNAL HEAD AND ONE NEW APS PUSHBUTTON ON THE SIGNAL POLE. PUSHBUTTON SHALL FACE NORTH, PARALLEL WITH CROSSWALK. INSTALL NEW 67W LED CREE XSPSM–D–HT–3ME–8L–40K7–IL–SV–N FIXTURE AT 30' MOUNTING HEIGHT ON 8' ARM.

(2) CONSTRUCT FOUNDATION PER WSDOT STANDARD PLAN J–21.10. FURNISH AND INSTALL NEW TYPE PS SIGNAL POLE WITH ONE NEW PEDESTRIAN SIGNAL HEAD AND ONE NEW APS PUSHBUTTON ON THE SIGNAL POLE. PUSHBUTTON SHALL FACE SOUTH, PARALLEL WITH CROSSWALK.

⟨1⟩ EXISTING SPLICE VAULT, SIGNAL CABINET, UPS CABINET AND SERVICE CABINETS TO REMAIN. INSTALL NEW 12–STRAND SINGLE MODE FIBER OPTIC CABLE FROM PROPOSED HAWK SIGNAL CONTROLLER TO EXISTING SPLICE VAULT AND COIL 50 FEET OF FIBER SLACK IN EXISTING SPLICE VAULT. ROUTE NEW 12–STRAND SINGLE MODE FIBER OPTIC CABLE THROUGH EXISTING CONDUIT TO EXISTING CONTROLLER CABINET AT INTERSECTION OF 68TH AVE W AND 200TH ST SW AND COIL 30 FEET OF FIBER SLACK WITHIN EXISTING CONTROLLER CABINET. TERMINATE STRANDS BY FUSION SPLICING LAB POLISHED LC CONNECTORS WITH SINGLE MODE PIGTAILS ACCORDING TO MANUFACTURER'S RECOMMENDATION.

⟨2⟩ INTERCEPT AND EXTEND EXISTING CONDUIT AND CONDUCTORS TO NEW JUNCTION BOX. MATCH EXISTING CONDUIT SIZE AND TYPE. IF SUFFICIENT SLACK IS NOT AVAILABLE, PULL OUT AND REPLACE WITH NEW ILLUMINATION CONDUCTORS.

⟨3⟩ CONSTRUCT COMBINED CABINET FOUNDATION PER CITY OF LYNNWOOD STD. DRAWING 8–17. FURNISH AND INSTALL NEW CONTROLLER CABINET, SERVICE CABINET AND UPS CABINET ON NEW FOUNDATION. INSTALL NEW FIBER TERMINATION SHELF AND COIL 30 FEET OF FIBER SLACK WITHIN NEW CONTROLLER CABINET.

⟨4⟩ POWER SOURCE IS RELOCATED TIMBER UTILITY POLE MOUNTED TRANSFORMER. THE CONTRACTOR SHALL COORDINATE WITH SNOHOMISH PUD INCLUDING COMPLETING ALL FORMS/APPLICATIONS AND PAYMENT OF ALL ASSOCIATED FEES. THE CONTRACTOR SHALL INSTALL CONDUIT AND CONDUCTORS TO THE POWER SOURCE. CONDUIT SHALL BE CONTINUOUS BETWEEN THE SERVICE CABINET AND THE POWER SOURCE. SNOHOMISH PUD SHALL MAKE THE FINAL CONNECTION TO THE POWER SOURCE.

⟨5⟩ EXISTING TIMBER UTILITY POLE TO BE RELOCATED OR REPLACED BY SNOHOMISH PUD. SEE UTILITY COORDINATION PLANS FOR ADDITIONAL DETAILS. CONTRACTOR SHALL COORDINATE WITH SNOHOMISH PUD TO INSTALL NEW TIMBER UTILITY POLE MOUNTED LUMINAIRE PER ILLUMINATION POLE SCHEDULE, THIS SHEET.

⟨6⟩ CONSTRUCT FOUNDATION PER CUSTOM PEDESTRIAN POLE FOUNDATION, SEE W SERIES SHEETS. FURNISH AND INSTALL PEDESTRIAN SCALE LIGHT POLE PER ILLUMINATION POLE SCHEDULE, THIS SHEET.

⟨7⟩ CONSTRUCT FOUNDATION PER CUSTOM PARKING LOT POLE FOUNDATION, SEE W SERIES SHEETS. RELOCATE EXISTING PARKING LOT STREET LIGHT POLE. REMOVE EXISTING FOUNDATION MINIMUM 24" BELOW SURFACE GRADE. FILL AND COMPACT VOID.

⟨8⟩ EXISTING STREET LIGHT POLE TO REMAIN. PROTECT DURING CONSTRUCTION.

⟨9⟩ EXISTING TIMBER UTILITY POLE MOUNTED LUMINAIRE TO REMAIN. PROTECT DURING CONSTRUCTION.

⟨10⟩ REMOVE EXISTING TYPE PPB SIGNAL POLE AND FOUNDATION TO A MINIMUM 24" BELOW SURFACE GRADE. FILL AND COMPACT VOID.

⟨11⟩ REMOVE EXISTING TYPE FB SIGNAL POLE AND FOUNDATION TO A MINIMUM 24" BELOW SURFACE GRADE. FILL AND COMPACT VOID.

⟨12⟩ REMOVE EXISTING STREET LIGHT POLE AND FOUNDATION TO A MINIMUM 24" BELOW SURFACE GRADE. FILL AND COMPACT VOID.

⟨13⟩ EXISTING TYPE III SIGNAL POLE TO REMAIN. PROTECT DURING CONSTRUCTION.

⟨14⟩ EXISTING TYPE II SIGNAL POLE TO REMAIN. PROTECT DURING CONSTRUCTION.

⟨15⟩ REMOVE EXISTING JUNCTION BOX. FILL AND COMPACT VOID.

⟨16⟩ INSTALL 2 – 30 AMP, 120/240V SINGLE PHASE, 4 WIRE ILLUMINATION CIRCUITS AS PART OF THE PROPOSED RESTROOM BUILDING POWER PANEL FOR TRANSIT CENTER LIGHTING. INSTALL NLIGHT ECLYPSE MOTION CONTROL SYSTEM ADJACENT TO POWER PANEL AND CONNECT TO PROPOSED ILLUMINATION CIRCUITS.

⟨17⟩ CONSTRUCT FOUNDATION PER CUSTOM PARKING LOT POLE FOUNDATION, SEE W SERIES SHEETS. FURNISH AND INSTALL NEW PARKING LOT STREET LIGHT POLE PER ILLUMINATION POLE SCHEDULE, THIS SHEET.

⟨18⟩ CONSTRUCT FOUNDATION PER CUSTOM PEDESTRIAN POLE FOUNDATION, SEE W SERIES SHEETS. RELOCATE EXISTING PEDESTRIAN SCALE LIGHT POLE. REMOVE EXISTING FOUNDATION TO A MINIMUM 24" BELOW SURFACE GRADE. FILL AND COMPACT VOID.

⟨19⟩ INSTALL NEW TYPE 8 SPLIT LID JUNCTION BOX AND COIL 30 FEET OF FIBER SLACK WITHIN JUNCTION BOX.

⟨20⟩ EXISTING TIMBER UTILITY POLE TO REMAIN. CONTRACTOR SHALL COORDINATE WITH SNOHOMISH PUD TO REPLACE EXISTING LUMINAIRE WITH NEW FIXTURE PER ILLUMINATION POLE SCHEDULE, THIS SHEET.

⟨21⟩ EXISTING TIMBER UTILITY POLE TO REMAIN. CONTRACTOR SHALL COORDINATE WITH SNOHOMISH PUD TO INSTALL NEW TIMBER UTILITY POLE MOUNTED LUMINAIRE PER ILLUMINATION POLE SCHEDULE, THIS SHEET.

⟨22⟩ EXISTING PEDESTRIAN LIGHT POLE TO REMAIN. PROTECT DURING CONSTRUCTION.

ILLUMINATION WIRING DIAGRAM

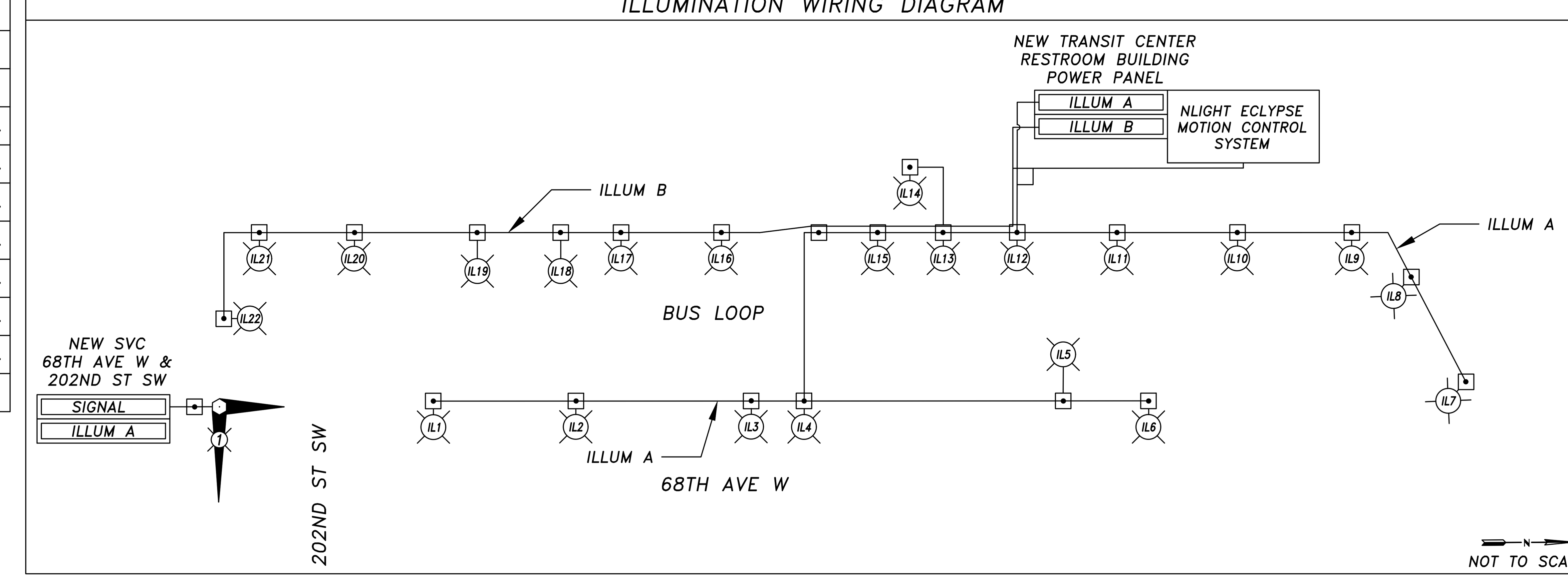

SERVICE BREAKER SCHEDULE
SVC AT 68TH AVE W & 202ND ST SW

CIRCUIT	VOLTAGE	BREAKER	CONTACTOR
MAIN	120/240	2P–100 AMP	---
SIGNAL	240	1P–50 AMP	---
ILLUM A	240	2P–20 AMP	30 AMP

NEW TRANSIT CENTER RESTROOM BUILDING POWER PANEL SCHEDULE

CIRCUIT	VOLTAGE	BREAKER	CONTACTOR
MAIN	120/240	2P–60 AMP	---
ILLUM A	240	2P–15 AMP	30 AMP
ILLUM B	240	2P–15 AMP	30 AMP

TENW
Transportation Engineering NorthWest
Transportation Planning | Design | Traffic Impact & Operations
11400 SE 8th Street, Suite 200, Bellevue, WA 98004 | Office (425) 889-6747
Project Contact: Elyse Stemmler, P.E.
Phone: 425-250-5004

CALL BEFORE YOU DIG 1–800–424–5555

CHECKED BY	DRAWN BY	DESIGNER

NO.	REVISION COMMENTS	BY	REVIEW	DATE

ELYSE M. STEMMLER · STATE OF WASHINGTON · 52125 · REGISTERED PROFESSIONAL ENGINEER

09/29/21

JURISDICTION:
CITY OF LYNNWOOD

communitytransit

Swift ORANGE LINE – 100% SUBMITTAL
TERMINI TRAFFIC SIGNAL AND ILLUMINATION PLANS
WESTERN TERMINUS - EDMONDS C (STATION # EB 3221 & WB 3222)
EDMONDS C, DETAIL SHEET

TITLE

Otak
11241 Willows Road NE, Suite 200
Redmond, WA 98052
425.822.4446
www.otak.com

12345
PROJECT NUMBER

TS-1.21
DRAWING NO.

SHEET 519 OF 622

© 2018 OTAK, INC.

Plotted: Sep 24, 2021 - 11:27am A:\Active Projects\Swift Orange Line BRT - 5840, 2020-35\Design - 2020-35\Deliverables\2021-XX-XX Next Submittal\CAD\Sites 1-4 Edmonds Community\ECC Master Signal.dwg Layout Name: TS-1.21

POLE/PUSHBUTTON PLACEMENT NOTES

1. SIGNAL CONTRACTOR, CONCRETE CONTRACTOR, AND ASPHALT CONTRACTOR SHALL COORDINATE TO ENSURE THAT THE RELATIONSHIPS SHOWN BETWEEN THE SIGNAL POLE AND DIMENSIONED ELEMENTS ARE MAINTAINED.
2. PEDESTRIAN PUSHBUTTON SHALL BE ORIENTED SUCH THAT THE FACE OF THE PUSHBUTTON IS PARALLEL WITH THE CROSSWALK THAT IT SERVES.
3. SIGNAL CONTRACTOR AND CONCRETE CONTRACTOR SHALL CONFIRM THAT THE PUSHBUTTON IS NO GREATER THAN 10-INCHES HORIZONTAL CLEARANCE FROM ANY FACE OF CURB OR VERTICAL OBSTRUCTION.

68TH AVE W & 202ND PL SOUTHWEST CORNER DETAIL

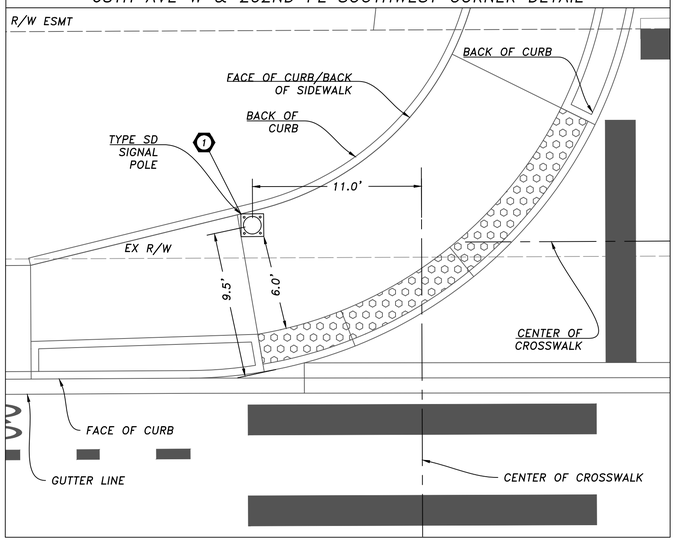

68TH AVE W & 202ND PL SOUTHEAST CORNER DETAIL

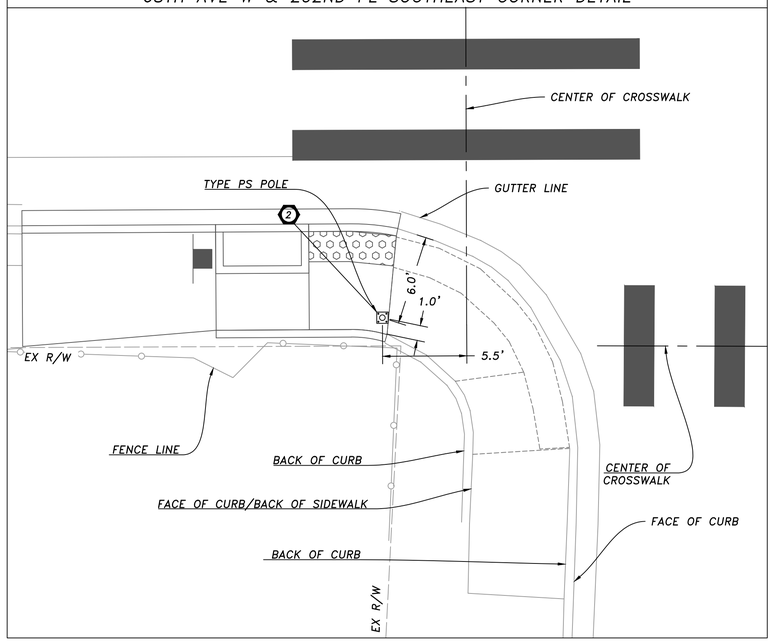

INTERCONNECT SCHEMATIC – 68TH AVE W

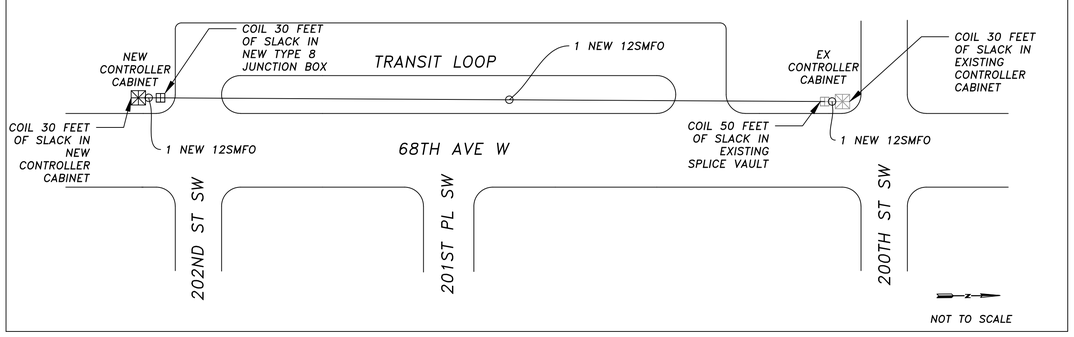

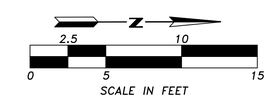

TENW
Transportation Engineering NorthWest

Transportation Planning | Design | Traffic Impact & Operations
11400 SE 8th Street, Suite 200, Bellevue, WA 98004 | Office (425) 889-6747

Project Contact: Elyse Stemmler, P.E.
Phone: 425-250-5004

CALL BEFORE YOU DIG 1-800-424-5555

NO.	REVISION COMMENTS	BY	REVIEW	DATE

DESIGNER | DRAWN BY | CHECKED BY

ELYSE M. STEMMLER, STATE OF WASHINGTON, 52125, REGISTERED PROFESSIONAL ENGINEER
09/29/21

JURISDICTION:
CITY OF LYNNWOOD

communitytransit
Swift ORANGE LINE – 100% SUBMITTAL
TERMINI TRAFFIC SIGNAL AND ILLUMINATION PLANS
WESTERN TERMINUS - EDMONDS C (STATION # EB 3221 & WB 3222)
EDMONDS C, POLE PLACEMENT DETAIL

TITLE

Otak
11241 Willows Road NE, Suite 200
Redmond, WA 98052
425.822.4446
www.otak.com

12345
PROJECT NUMBER

TS-1.22

DRAWING NO.

SHEET 520 OF 622

© 2018 OTAK, INC.

Plotted: Sep 24, 2021 - 11:27am A:\Active Projects\Swift Orange Line BRT - 5840, 2020-35\Design - 2020-35\Deliverables\2021-XX-XX Next Submittal\CAD\Sites 1-4 Edmonds Community\ECC Master Signal.dwg Layout Name: TS-1.22

POLES 1 & 2 DETAILS

Lynnwood Edmonds College Terminus

DETAILS ARE FOR HAWK SIGNAL AND FLASHING BEACON EQUIPMENT ONLY. SOME POLES MAY NOT BE SHOWN.

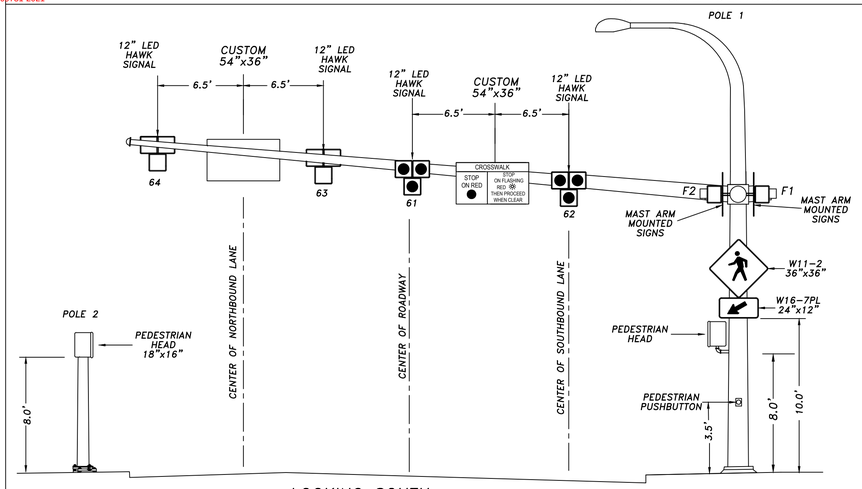

LOOKING SOUTH
(68TH AVE W)

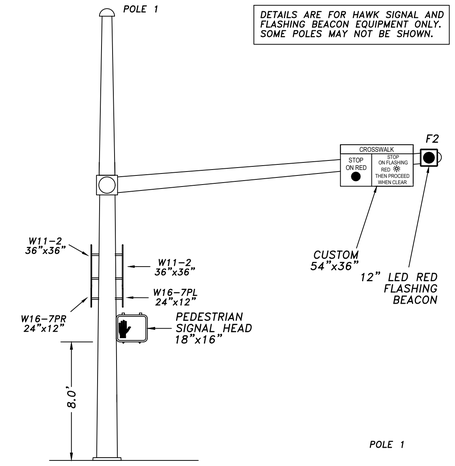

LOOKING WEST
(202ND ST SW)

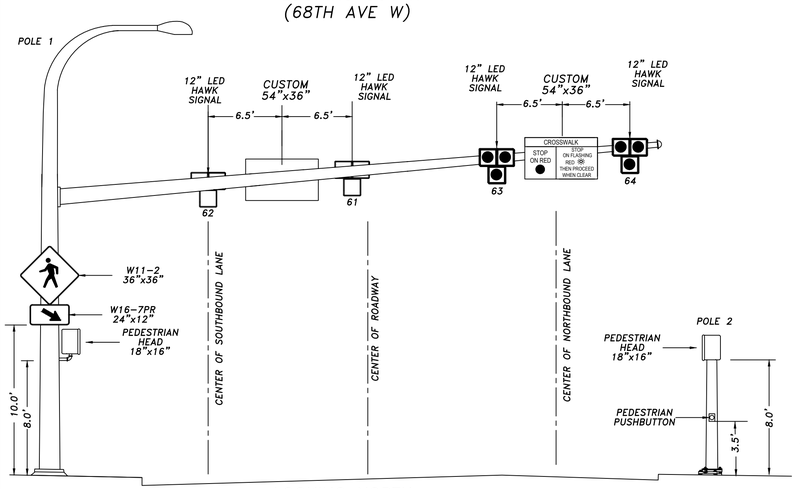

LOOKING NORTH
(68TH AVE W)

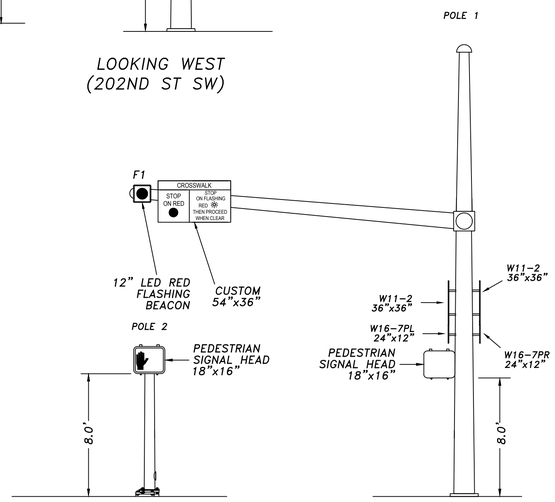

LOOKING EAST
(202ND ST SW)

EXISTING PHASE DIAGRAM

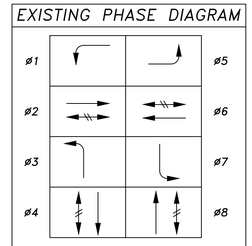

PRE-EMPTION SCHEDULE

A = ø2 & ø5
B = ø4 & ø7
C = ø1 & ø6
D = ø3 & ø8

CONTROLLER CABINET

A121	OLA	691	R	
A122	OLA	692	Y	5C
A123	OLA	693	G	
AC-	BUS	696/726	W	5C
113	2PED DW	721	R	
115	2PED W	722	G	
TB8-4		724	BLK	5C
TB8-6		725	O	

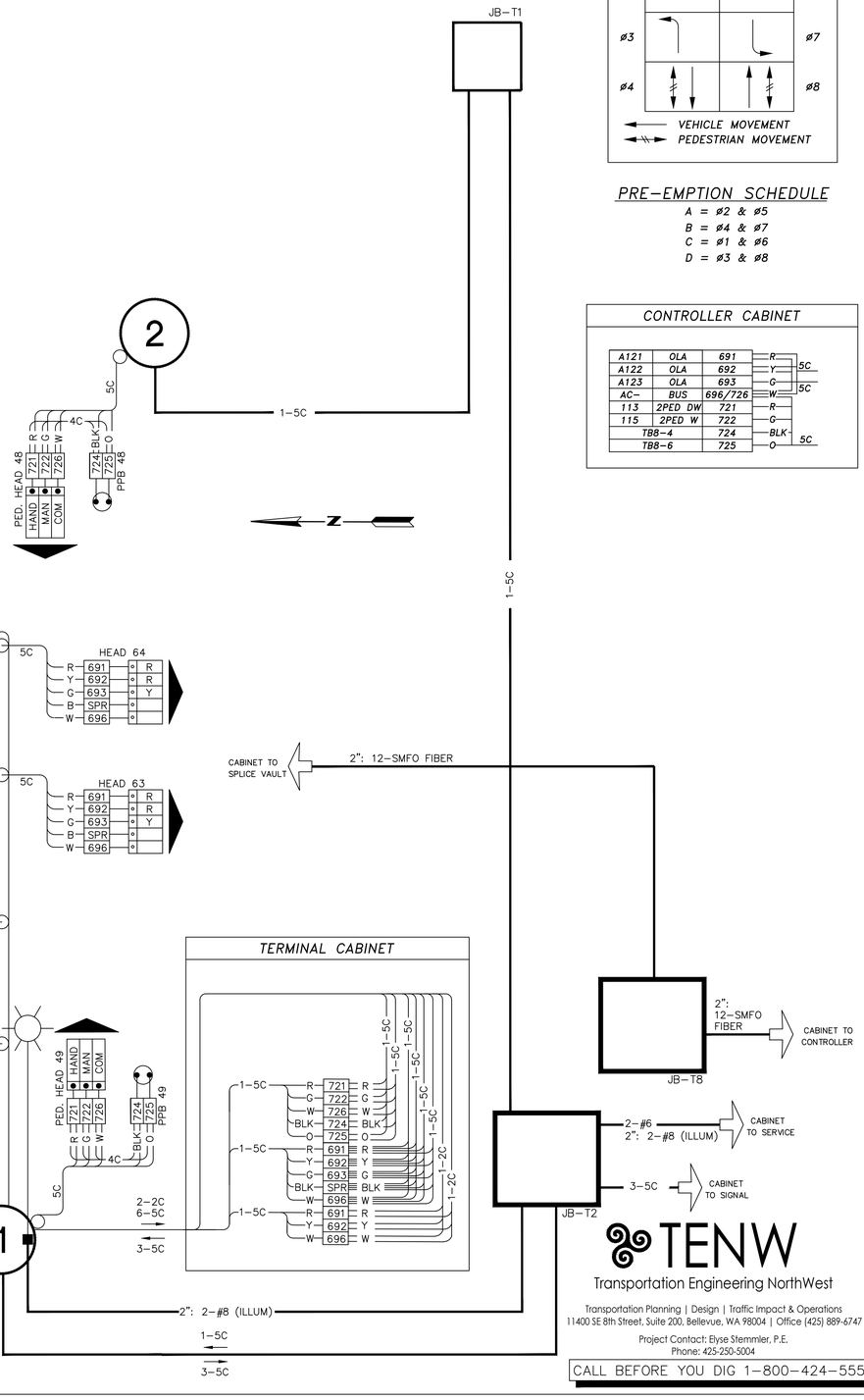

CHECKED BY			
DRAWN BY			
DESIGNER			
NO.	REVISION COMMENTS	BY	REVIEW DATE
	1st Submittal, 3/22/2022		

ELISE M. STEMMLER
STATE OF WASHINGTON
No. 52128
REGISTERED PROFESSIONAL ENGINEER

09/29/21

JURISDICTION:
CITY OF LYNNWOOD

communitytransit

Swift ORANGE LINE – 100% SUBMITTAL
TERMINI TRAFFIC SIGNAL AND ILLUMINATION PLANS
WESTERN TERMINUS - EDMONDS C (STATION # EB 3221 & WB 3222)
EDMONDS C, WIRING DIAGRAM

TITLE

Otak
11241 Willows Road NE, Suite 200
Redmond, WA 98052
425.822.4446
www.otak.com

12345
PROJECT NUMBER

TS-1.31
DRAWING NO.

SHEET 521 OF 622

© 2018 OTAK, INC.

TENW
Transportation Engineering NorthWest
Transportation Planning | Design | Traffic Impact & Operations
11400 SE 8th Street, Suite 200, Bellevue, WA 98004 | Office (425) 889-6747
Project Contact: Elyse Stemmler, P.E.
Phone: 425-250-5004

CALL BEFORE YOU DIG 1-800-424-5555

Plotted: Sep 24, 2021 - 11:27am A:\Active Projects\Swift Orange Line BRT - 5840, 2020-35\Design - 2020-35\Deliverables\2021-XX-XX Next Submittal\CAD\Sites 1-4 Edmonds Community\ECC Master Signal.dwg Layout Name: TS-1.31

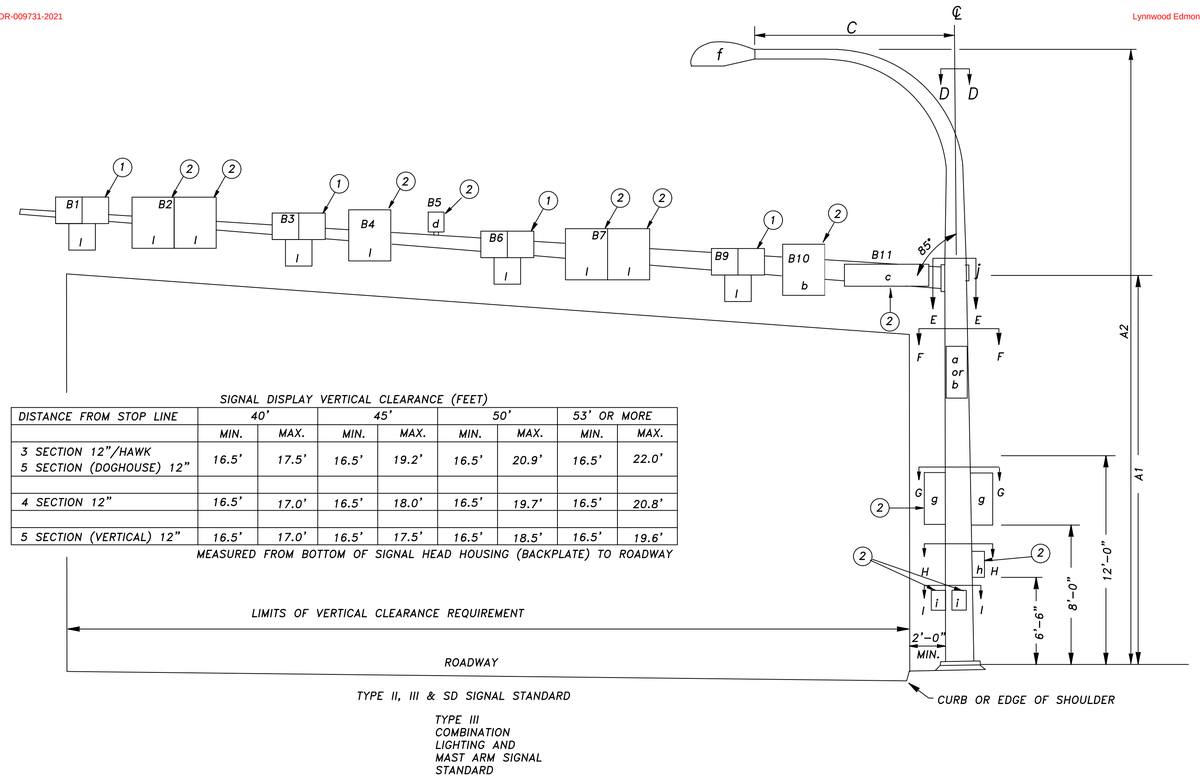

SIGNAL DISPLAY VERTICAL CLEARANCE (FEET)

DISTANCE FROM STOP LINE	40'		45'		50'		53' OR MORE	
	MIN.	MAX.	MIN.	MAX.	MIN.	MAX.	MIN.	MAX.
3 SECTION 12"/HAWK 5 SECTION (DOGHOUSE) 12"	16.5'	17.5'	16.5'	19.2'	16.5'	20.9'	16.5'	22.0'
4 SECTION 12"	16.5'	17.0'	16.5'	18.0'	16.5'	19.7'	16.5'	20.8'
5 SECTION (VERTICAL) 12"	16.5'	17.0'	16.5'	17.5'	16.5'	18.5'	16.5'	19.6'

MEASURED FROM BOTTOM OF SIGNAL HEAD HOUSING (BACKPLATE) TO ROADWAY

TYPE II, III & SD SIGNAL STANDARD

TYPE III
COMBINATION
LIGHTING AND
MAST ARM SIGNAL
STANDARD

LEGEND

a. VEHICLE SIGNAL HEAD
b. SIGN
c. STREET NAME SIGN
d. PRE-EMPT DETECTOR WITH EVP INDICATOR LED
e. DELETED (10/22/90)
f. LUMINAIRE
g. PEDESTRIAN SIGNAL HEAD
h. TERMINAL CABINET –OR– FLASHER CONTROLLER CABINET
i. PEDESTRIAN PUSHBUTTON ASSEMBLY
j. HANDHOLE
k. DETECTION CAMERA
l. FLASHING BEACON WITH SIGN (HAWK)

POLE ORIENTATION AND ATTACHMENT POINT DETAIL

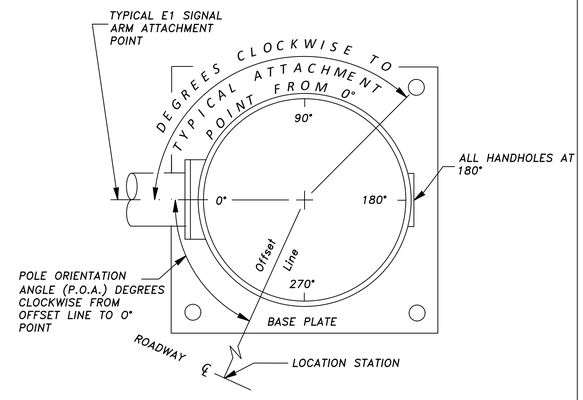

SIGNAL STANDARD DETAIL CHART

	FIELD LOCATION					TYPE	MAST ARM LENGTH (FT)	MOUNTING HEIGHT(FT)		SIGNAL MAST ARM DATA																	(X)(Y)(Z) TOTAL(FT)^3	LUMINAIRE ARM(FT)	POLE ATTACHMENT POINT ANGLES (deg)							FOUNDATION DEPTHS(FT) (3)			REMARKS
										OFFSET DISTANCES (FT)(Z) (POLE CENTERLINE TO ATTACHMENT POINT)							WINDLOAD AREAS (FT)^2 (X)(Y)																								
	STATION	OFFSET	LT	RT	P.O.A.			A1	A2	B1	B2	B3	B4	B5	B6	B7	B9	B10	B11	B1	B2	B3	B4	B6	B7	B9	B10	B11		C	D	F1	G1	G2	H	I1	J	3' RD	3' SQ	4' RD	
1	68TH 106+19.0	32.0'	X		0	SD	54	19.0	30.0	52.5 (2)	46.0 (2)	39.5 (2)	–	–	32.0	25.5	19.0	–	–	8.0 (2)	13.5 (2)	8.0 (2)	–	8.0	13.5	8.0	–	–	2,610 (4)	8	–	0	270	–	135	270	–	15	8	8	FDN PER WSDOT STD PLAN J-26.10.
					270	–	40	19.0		39.0	36.0	–	–	–	39.0 (5)	35.0 (5)	–	–	–	2.7	13.5	–	–	2.7 (5)	13.5 (5)	–	–	–												
2	68TH 106+24.5	28.0'		X	–	PS	–	–	–	–	–	–	–	–	–	–	–	–	–	–	–	–	–	–	–	–	–	–	–	–	(1)	–	–	–	270	–	–	–	–	FDN PER WSDOT STD PLAN J-21.10.

(1) NOT APPLICABLE. PEDESTRIAN SIGNAL HEAD SHALL BE MOUNTED WITH A TYPE D TOP MOUNT.

(2) SIGNAL AND SIGN LOCATIONS MOUNTED ON BACK SIDE OF MAST ARM, FACING SOUTH.

(3) FOUNDATION DEPTHS ASSUME A SOIL ALLOWABLE LATERAL BEARING PRESSURE OF 2,500 PSF AT 68TH AVE W & 202ND ST SW PER GEOTECHNICAL ENGINEER RECOMMENDATION ON 9/10/2020.

(4) CALCULATED WINDLOAD FOR MAST ARM WITH LARGER WINDLOAD VALUE PLUS 500 FT^3 FOR FUTURE UNKNOWN CONDITIONS.

(5) SIGNAL AND SIGN LOCATIONS MOUNTED ON BACK SIDE OF MAST ARM, FACING WEST.

NOTE: THE ENGINEER SHALL REVIEW AND APPROVE ALL SIGNAL POLE LOCATIONS PRIOR TO FOUNDATIONS INSTALLATION. CONTRACTOR SHALL POTHOLE POLE LOCATIONS PRIOR TO SHOP DRAWING PREPARATION.

NO.	REVISION COMMENTS	BY	REVIEW	DATE

DESIGNER | DRAWN BY | CHECKED BY

ELISE M. STEMMLER
STATE OF WASHINGTON
No. 52128
REGISTERED PROFESSIONAL ENGINEER
09/29/21

JURISDICTION:
CITY OF LYNNWOOD

100% SUBMITTAL

TERMINI TRAFFIC SIGNAL AND ILLUMINATION PLANS
WESTERN TERMINUS - EDMONDS C (STATION # EB 3221 & WB 3222)
EDMONDS C, POLE DETAIL

TITLE

TENW
Transportation Engineering NorthWest
Transportation Planning | Design | Traffic Impact & Operations
11400 SE 8th Street, Suite 200, Bellevue, WA 98004 | Office (425) 889-6747
Project Contact: Elyse Stemmler, P.E.
Phone: 425-250-5004

Otak
11241 Willows Road NE, Suite 200
Redmond, WA 98052
425.822.4446
www.otak.com

CALL BEFORE YOU DIG 1–800–424–5555

12345
PROJECT NUMBER

TS-1.41
DRAWING NO.

SHEET 522 OF 622

© 2018 OTAK, INC.

Plotted: Sep 24, 2021 - 11:28am A:\Active Projects\Swift Orange Line BRT - 5840, 2020-35\Design - 2020-35\Deliverables\2021-XX-XX Next Submittal\CAD\Sites 1-4 Edmonds Community\ECC Master Signal.dwg Layout Name: TS-1.41

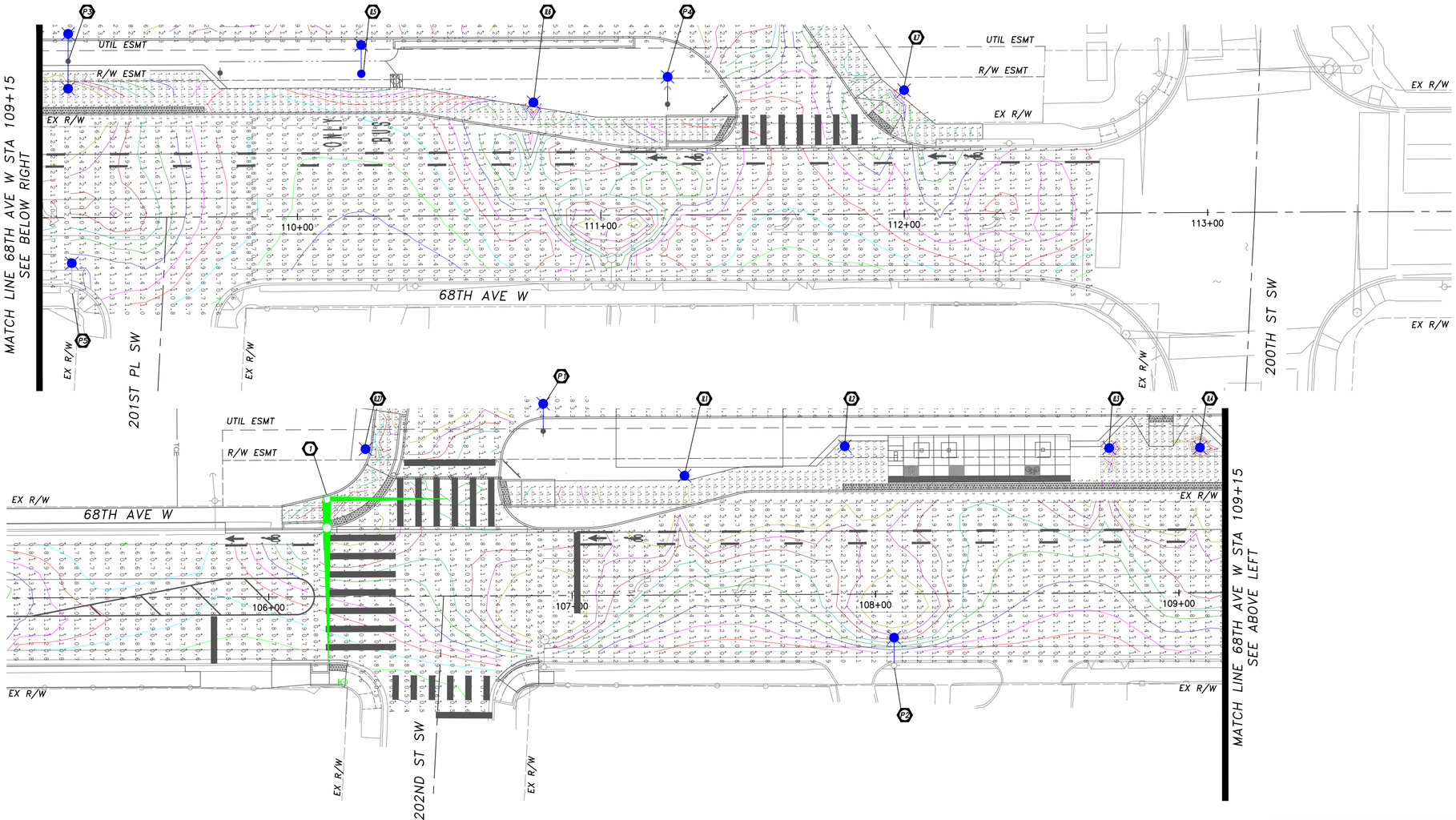

CALCULATION SUMMARY

CALCULATION AREA	DESIGN CRITERIA: AVG. MAINTAINED (FC)	DESIGN CRITERIA: UNIFORMITY RATIO AVG. FC/ MIN. FC
201ST PL SW AND 68TH AVE W (INTERSECTION)	0.90 / **1.43**	4.00:1 / **2.38:1**
68TH AVE W NORTH 201ST (MAINLINE)	0.90 / **1.05**	4.00:1 / **3.50:1**
68TH AVE W SOUTH 201ST (MAINLINE)	0.90 / **1.86**	4.00:1 / **2.33:1**
202ND ST SW AND 68TH AVE W (INTERSECTION)	0.80 / **1.58**	4.00:1 / **3.95:1**
68TH AVE W SIDEWALK (SIDEWALK)	0.80 / **2.01**	4.00:1 / **2.87:1**
68TH AVE W SOUTH 202ND (MAINLINE)	0.90 / **0.93**	4.00:1 / **1.86:1**

CALCULATION AREA	TOTAL SITE LUMENS	TOTAL AREA (SF)	LUMENS/SF
EDMONDS COLLEGE TERMINI SITE	141,179	29,700	**4.8**
EDMONDS COLLEGE TERMINI SITE DURING CURFEW HOURS	74,877	29,700	**2.5**

ILLUMINATION LEGEND

EXIST.	NEW/RELOCATED	DESCRIPTION
		SIGNAL POLE TYPE SD
		UTILITY POLE MOUNTED LUMINAIRE
		UTILITY POLE
		LIGHT STANDARD
		PEDESTRIAN LIGHT STANDARD
		SIGNAL/ILLUM POLE NUMBER

N

0 10 20 40 60

SCALE IN FEET

TENW
Transportation Engineering NorthWest

Transportation Planning | Design | Traffic Impact & Operations
11400 SE 8th Street, Suite 200, Bellevue, WA 98004 | Office (425) 889-6747

Project Contact: Elyse Stemmler, P.E.
Phone: 425-250-5004

CALL BEFORE YOU DIG 1-800-424-5555

NO.	REVISION COMMENTS	BY	REVIEW	DATE

DESIGNER | DRAWN BY | CHECKED BY

ELYSE M. STEMMLER
STATE OF WASHINGTON
No. 52128
REGISTERED PROFESSIONAL ENGINEER

09/29/21

JURISDICTION:
CITY OF LYNNWOOD

communitytransit
Swift ORANGE LINE – 100% SUBMITTAL
TERMINI TRAFFIC SIGNAL AND ILLUMINATION PLANS
WESTERN TERMINUS - EDMONDS C (STATION # EB 3221 & WB 3222)
PHOTOMETRIC CALCULATIONS

TITLE

Otak
11241 Willows Road NE, Suite 200
Redmond, WA 98052
425.822.4446
www.otak.com

12345
PROJECT NUMBER

TS-1.51
DRAWING NO.

SHEET 523 OF 622

© 2018 OTAK, INC.

Plotted: Sep 24, 2021 - 11:28am A:\Active Projects\Swift Orange Line BRT - 5840, 2020-35\Design - 2020-35\Deliverables\2021-XX-XX Next Submittal\CAD\Sites 1-4 Edmonds Community\ECC Master Signal.dwg Layout Name: TS-1.51

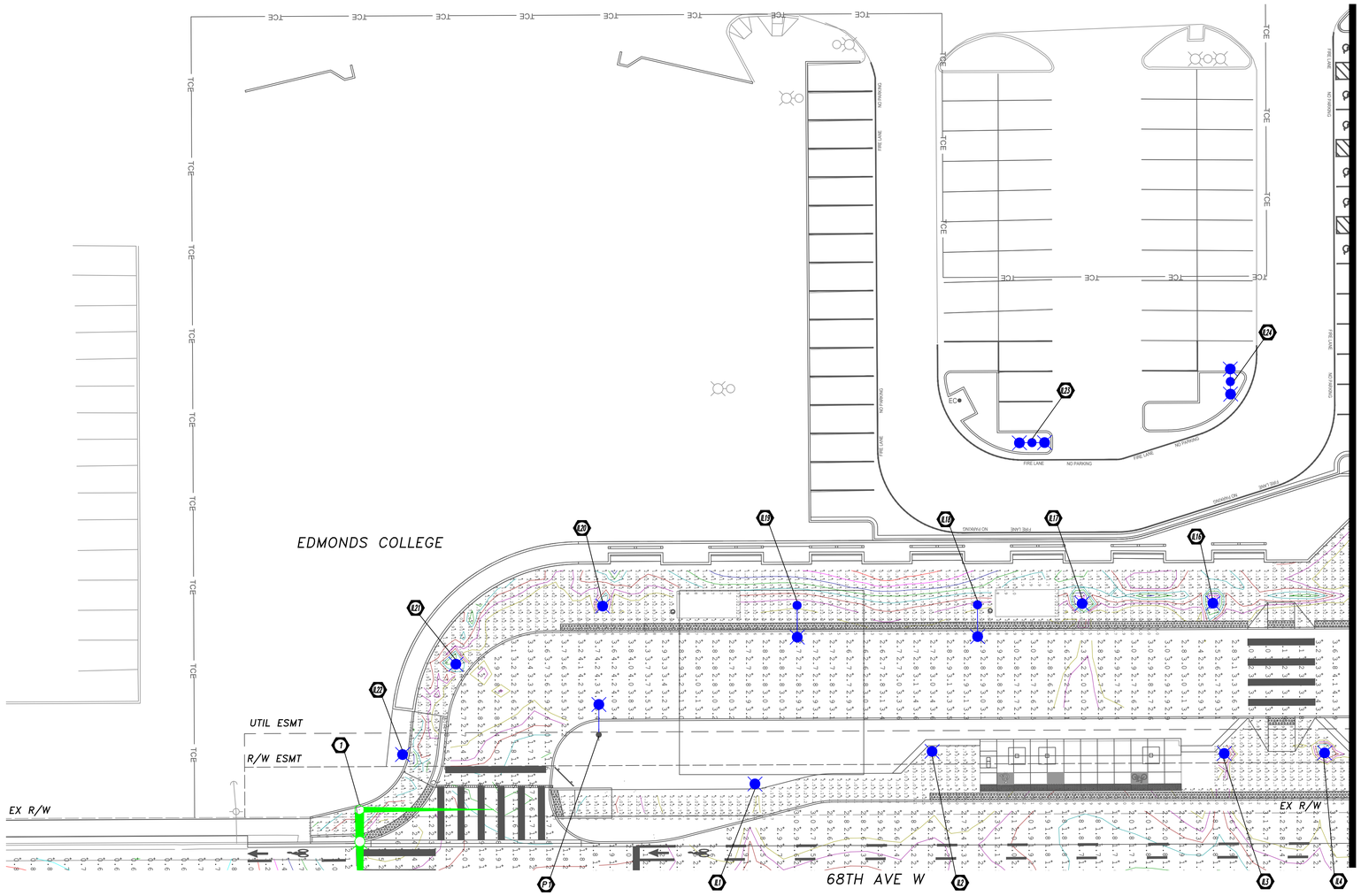

CALCULATION SUMMARY

TARGET / ACTUAL

CALCULATION AREA	DESIGN CRITERIA: AVG. MAINTAINED (FC)	DESIGN CRITERIA: UNIFORMITY RATIO AVG. FC/ MIN. FC
TRANSIT STOP 1 (TRANSIT CENTER)	2.50 / **2.64**	4.00:1 / **1.47:1**
TRANSIT STOP 2 (TRANSIT CENTER)	2.50 / **3.02**	4.00:1 / **1.37:1**
TRANSIT STOP 3 (TRANSIT CENTER)	2.50 / **2.51**	4.00:1 / **2.09:1**
TERMINI SIDEWALK (SIDEWALK)	2.00 / **2.18**	4.00:1 / **2.73:1**
BUS LOOP (MAINLINE)	2.00 / **2.62**	4.00:1 / **3.28:1**
TERMINI SIDEWALK BETWEEN STOPS (SIDEWALK)	2.00 / **2.88**	4.00:1 / **1.20:1**

CALCULATION AREA	TOTAL SITE LUMENS	TOTAL AREA (SF)	LUMENS/SF
EDMONDS COLLEGE TERMINI SITE	141,179	29,700	**4.8**
EDMONDS COLLEGE TERMINI SITE DURING CURFEW HOURS	74,877	29,700	**2.5**

ILLUMINATION LEGEND

EXIST.	NEW/RELOCATED	DESCRIPTION
		SIGNAL POLE TYPE SD
		UTILITY POLE MOUNTED LUMINAIRE
		UTILITY POLE
		LIGHT STANDARD
		PEDESTRIAN LIGHT STANDARD
		SIGNAL/ILLUM POLE NUMBER

N

0 10 20 40 60
SCALE IN FEET

TENW
Transportation Engineering NorthWest

Transportation Planning | Design | Traffic Impact & Operations
11400 SE 8th Street, Suite 200, Bellevue, WA 98004 | Office (425) 889-6747

Project Contact: Elyse Stemmler, P.E.
Phone: 425-250-5004

CALL BEFORE YOU DIG 1-800-424-5555

NO.	REVISION COMMENTS	BY	REVIEW	DATE

DESIGNER | DRAWN BY | CHECKED BY

ELYSE M. STEMMLER
STATE OF WASHINGTON
52125
REGISTERED PROFESSIONAL ENGINEER
09/29/21

JURISDICTION:
CITY OF LYNNWOOD

communitytransit
Swift ORANGE LINE – 100% SUBMITTAL
TERMINI TRAFFIC SIGNAL AND ILLUMINATION PLANS
WESTERN TERMINUS - EDMONDS C (STATION # EB 3221 & WB 3222)
PHOTOMETRIC CALCULATIONS

TITLE

Otak
11241 Willows Road NE, Suite 200
Redmond, WA 98052
425.822.4446
www.otak.com

12345
PROJECT NUMBER

TS-1.52

DRAWING NO.

SHEET 524 OF 622

© 2018 OTAK, INC.

Plotted: Sep 24, 2021 - 11:28am A:\Active Projects\Swift Orange Line BRT - 5840, 2020-35\Design - 2020-35\Deliverables\2021-XX-XX Next Submittal\CAD\Sites 1-4 Edmonds Community\ECC Master Signal.dwg Layout Name: TS-1.52

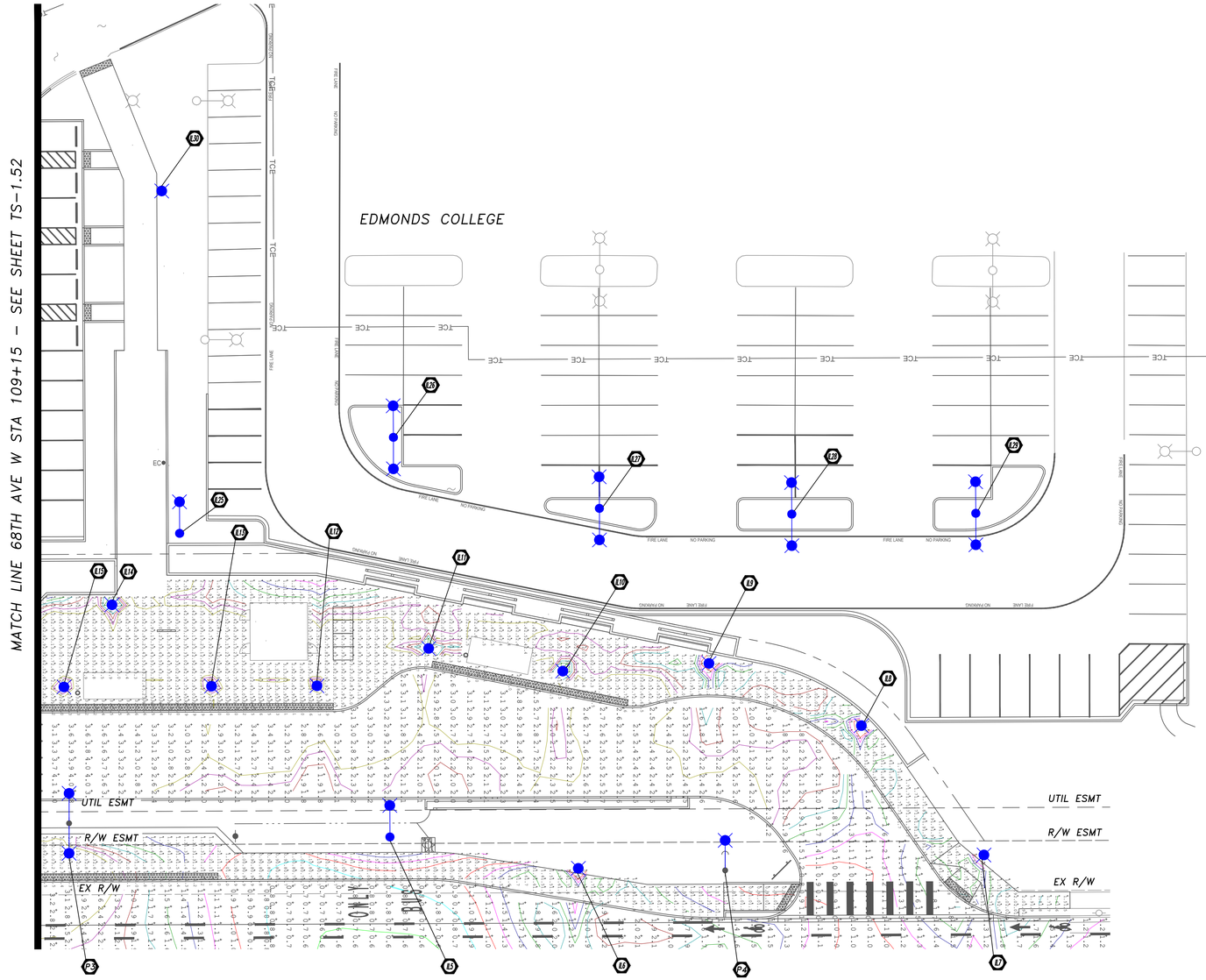

CALCULATION SUMMARY

CALCULATION AREA	DESIGN CRITERIA: AVG. MAINTAINED (FC) — TARGET / ACTUAL	DESIGN CRITERIA: UNIFORMITY RATIO AVG. FC/MIN. FC — TARGET / ACTUAL
TRANSIT STOP 1 (TRANSIT CENTER)	2.50 / **2.64**	4.00:1 / **1.47:1**
TRANSIT STOP 2 (TRANSIT CENTER)	2.50 / **3.02**	4.00:1 / **1.37:1**
TRANSIT STOP 3 (TRANSIT CENTER)	2.50 / **2.51**	4.00:1 / **2.09:1**
TERMINI SIDEWALK (SIDEWALK)	2.00 / **2.18**	4.00:1 / **2.73:1**
BUS LOOP (MAINLINE)	2.00 / **2.62**	4.00:1 / **3.28:1**
TERMINI SIDEWALK BETWEEN STOPS (SIDEWALK)	2.00 / **2.88**	4.00:1 / **1.20:1**

CALCULATION AREA	TOTAL SITE LUMENS	TOTAL AREA (SF)	LUMENS/SF
EDMONDS COLLEGE TERMINI SITE	141,179	29,700	**4.8**
EDMONDS COLLEGE TERMINI SITE DURING CURFEW HOURS	74,877	29,700	**2.5**

ILLUMINATION LEGEND

EXIST.	NEW/RELOCATED	DESCRIPTION
		SIGNAL POLE TYPE SD
		UTILITY POLE MOUNTED LUMINAIRE
		UTILITY POLE
		LIGHT STANDARD
		PEDESTRIAN LIGHT STANDARD
		SIGNAL/ILLUM POLE NUMBER

SCALE IN FEET: 0, 10, 20, 40, 60

TENW
Transportation Engineering NorthWest

Transportation Planning | Design | Traffic Impact & Operations
11400 SE 8th Street, Suite 200, Bellevue, WA 98004 | Office (425) 889-6747
Project Contact: Elyse Stemmler, P.E.
Phone: 425-250-5004

CALL BEFORE YOU DIG 1-800-424-5555

NO.	REVISION COMMENTS	BY	REVIEW	DATE

DESIGNER | DRAWN BY | CHECKED BY

ELYSE M. STEMMLER — STATE OF WASHINGTON — No. 52128 — REGISTERED PROFESSIONAL ENGINEER

09/29/21

JURISDICTION: CITY OF LYNNWOOD

communitytransit
Swift ORANGE LINE – 100% SUBMITTAL
TERMINI TRAFFIC SIGNAL AND ILLUMINATION PLANS
WESTERN TERMINUS - EDMONDS C (STATION # EB 3221 & WB 3222)
PHOTOMETRIC CALCULATIONS

TITLE

Otak
11241 Willows Road NE, Suite 200
Redmond, WA 98052
425.822.4446
www.otak.com

12345
PROJECT NUMBER

TS-1.53
DRAWING NO.

SHEET 525 OF 622

© 2018 OTAK, INC.

Plotted: Sep 24, 2021 - 11:28am A:\Active Projects\Swift Orange Line BRT - 5840, 2020-35\Design - 2020-35\Deliverables\2021-XX-XX Next Submittal\CAD\Sites 1-4 Edmonds Community\ECC Master Signal.dwg Layout Name: TS-1.53