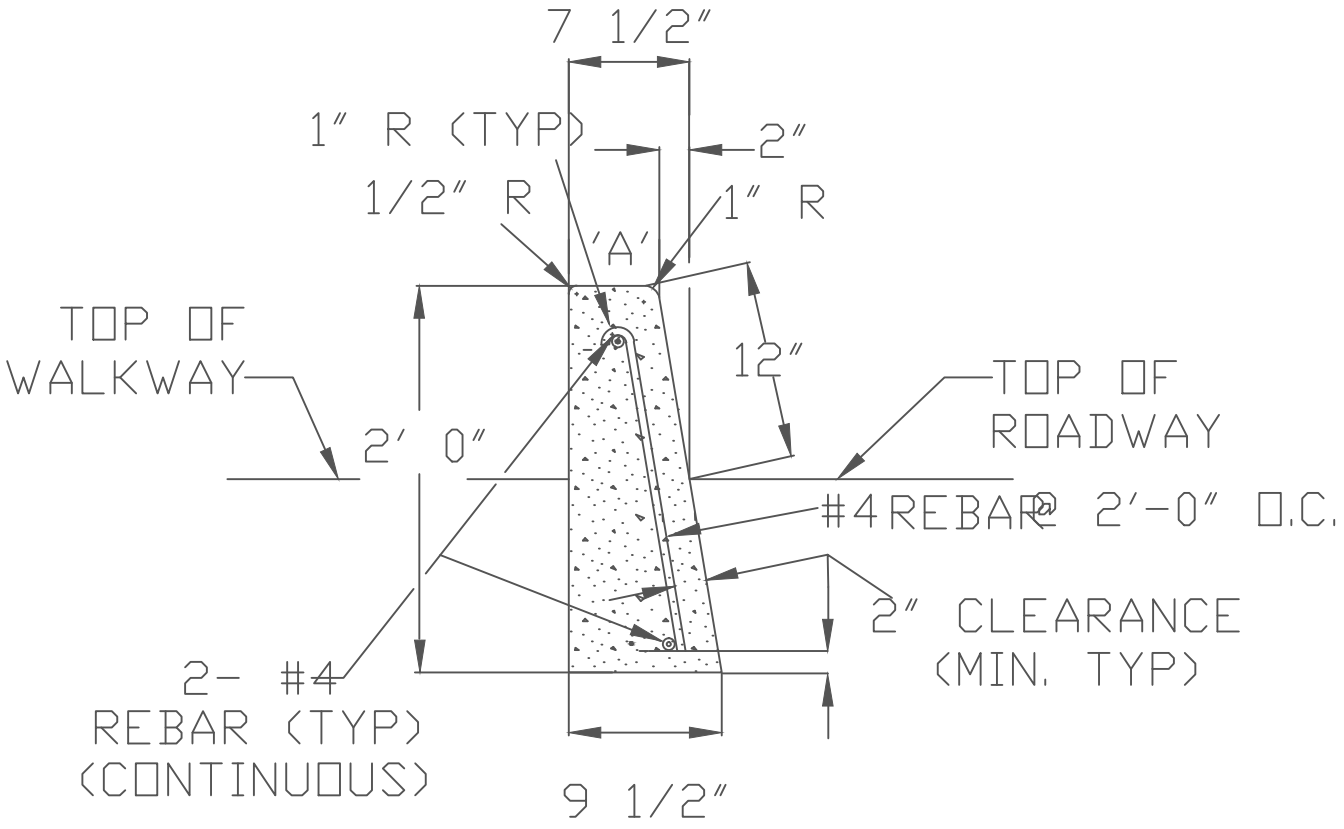

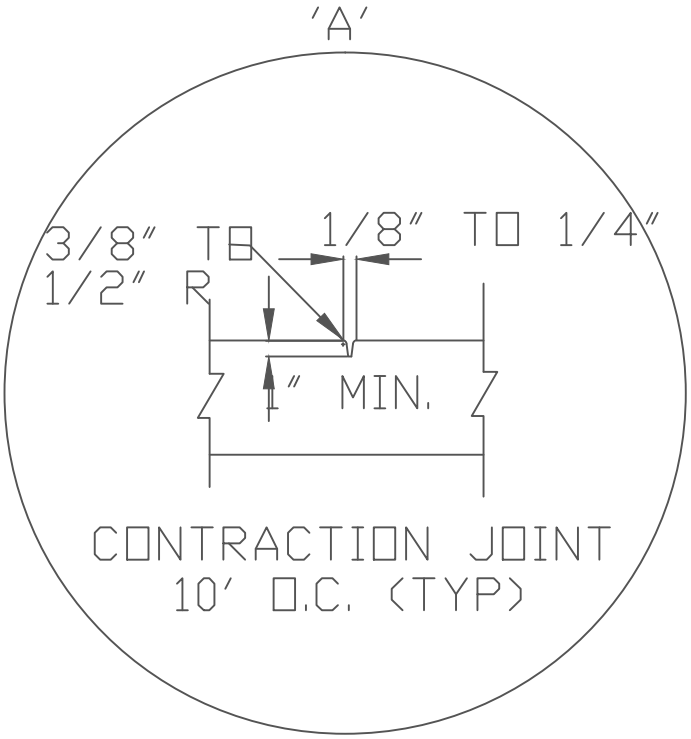

LYNNWOOD WASHINGTON
PUBLIC WORKS

CEMENT CONCRETE BARRIER CURB

I:\Standard_Plans

DRAWING NUMBER	STD3-4
SCALE	NONE
REVISION DATE	08/03
DEPARTMENT	PW