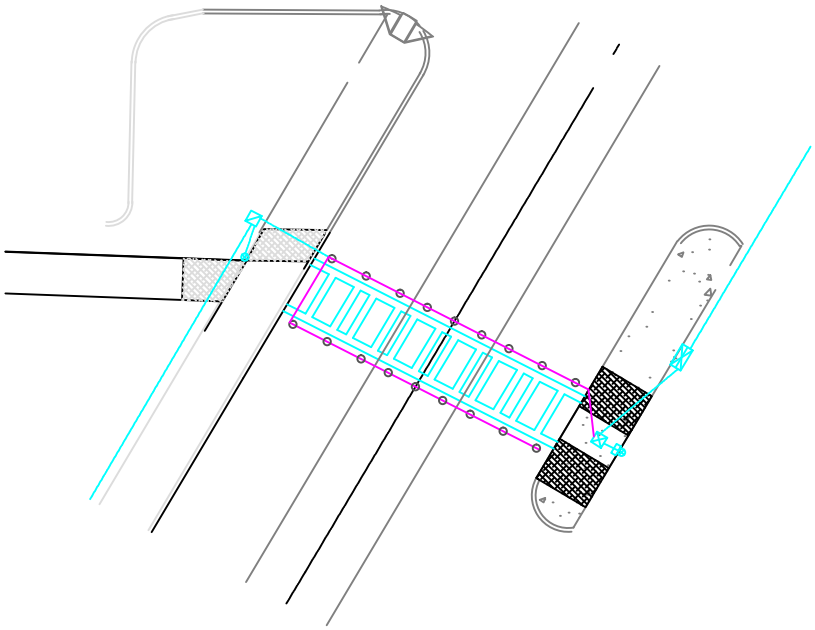

---OPTION A---
FOR EACH LANE - MARKERS HAVE BEEN PLACED AT 2FT FROM THE CURB OR LINE, WITH A SINGLE MARKER CENTERED BETWEEN THE 2.

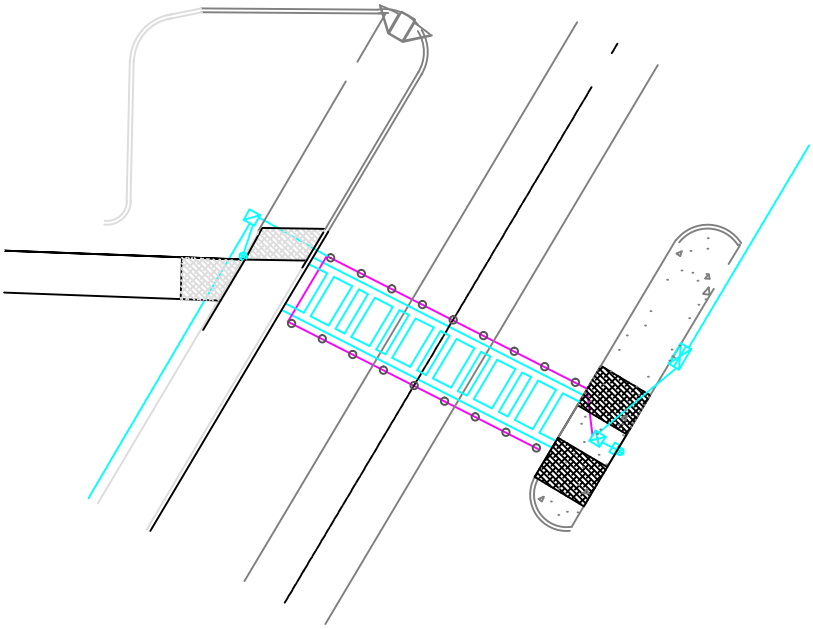

---OPTION B---
SAME NUMBER OF MARKERS BUT WITH EQUAL SPACING AT 4'6" FT.

NOTES:
1. THIS DRAWING HAS BEEN MODIFIED TO SHOW THE LAYOUT FOR THE SMARTSTUD SYSTEM.
2. PLEASE REFER TO THE ELECTRICAL LAYOUT DRAWING FOR DETAIL.

LYNNWOOD WASHINGTON
PUBLIC WORKS

CROSSWALK DETAIL

I:\Standard_Plans

DRAWING NUMBER	STD8-39
SCALE	NONE
REVISION DATE	01/02
DEPARTMENT	PW